FEDERAL ITEM IDENTIFICATION GUIDE

LABORATORY AIDS AND DEVICES

This Reprint replaces FIIG T399, dated October 3, 2008

Commander

Defense Logistics Information Service

ATTN: DLIS-K

74 Washington Avenue North, Suite 7

Battle Creek, Michigan 49037-3084

(COMM) (269) 961-5779

(DSN) 661-5779

PUBLISHED BY DEFENSE LOGISTICS INFORMATION SERVICE, BATTLE CREEK, MI

This Federal Item Identification Guide for Supply Cataloging is issued under the authority of Department of Defense Instruction 5025.7.

The use of this publication is mandatory for US. Federal Activities participating in Federal Catalog System Operations.

BY ORDER OF THE DIRECTOR

/s/

Commander

Defense Logistics Information Service

Contents

GENERAL INFORMATION 1
MRC Index 5
INDEX OF APPROVED ITEM NAMES COVERED BY THIS FIIG 9
APPLICABILITY KEY INDEX 13
Body 20
SECTION: A 20
SECTION: B 42
SECTION: C 50
SECTION: D 59
SECTION: STANDARD 73
SECTION: SUPPTECH 79
Reply Tables 81
Reference Drawing Groups 85
Technical Data Tables 91
FIIG Change List 97

GENERAL INFORMATION

1. Purpose and Scope

This Federal Item Identification Guide (FIIG) is a self-contained document for the collection, coding, transmittal, and retrieval of item characteristics and related supply management data for an item of supply for logistical use. This FIIG is to be used to describe items of supply identified by the index of approved item names appearing in this section.

2. Contents

This FIIG is comprised of the following:

Index of Approved Item Names Covered by this FIIG
Applicability Key Index
Section I - Item Characteristics Data Requirements
Section III - New text that should be here.
Appendix A - Reply Tables
Appendix B - Reference Drawing Groups (as applicable)
Appendix C - Technical Data Tables (as applicable)

a. Index of Approved Item Names Covered by this FIIG:

The index lists the approved item names with definitions and item name codes as they appear in Cataloging Handbook H6, applicable to this FIIG. In addition, each name entry is assigned an applicability key for use in relating the characteristics requirements in Section I to the specific item name.

b. Applicability Key Index:

The purpose of this index is to provide the user with a ready reference for determining the specific requirements which are applicable to a given approved item name. This index lists all requirements in sequence as they appear in the FIIG. The applicability of a Master Requirement Coded requirement is indicated by the column headed by the specific item name applicability key as follows:

(1) The letter "X" indicates the requirement must be answered for a full descriptive item.

(2) The letters "AR" indicate the requirement is to be answered as required by (1) instructional notes within the FIIG; (2) when the reply is predicated on replies to a related main requirement; or (3) when an asterisk (*) is used in conjunction with the applicability key column in Section I.

(3) A blank in the column indicates the requirement is not applicable to the specific item name.

c. Section I - Item Characteristics Data Requirements:

This section contains the physical and performance characteristics requirements needed to describe and identify an item of supply. These characteristics differentiate one item from all other items of supply and are to be used to meet the needs of all supported functions. This section is arranged in columns. Identification of each column and instructions pertinent thereto are as follows:

(1) Applicability Key:

The first column shows the applicability key(s) for each requirement. It indicates whether the requirement need be satisfied for the item being identified. "ALL" indicates that the requirement must be answered for all items covered by the FIIG. One or more alphabetic character(s) or group of one or more alphabetic characters indicates a response is required when describing items with an approved item name or names represented by the key(s). An asterisk (*) used in conjunction with any applicability key indicates that the characteristic stated in the requirement may not be applicable to all items covered by the FIIG.

(2) Master Requirement Codes (MRC):

A four-position code which is assigned to a FIIG requirement for identification of the requirement, cross-referencing requirements in the various sections and appendices of the FIIG, and for mechanized processing and retrieval of FIIG generated data. Absence of a MRC for a requirement indicates a lead-in to requirements with individual MRCs in Appendix B.

(a) The coding technique for providing MULTIPLE/OPTIONAL responses will not be used for a Section I requirement assigned Mode Code A or L that leads to Appendix B sketches with dimensional requirements.

(b) Identified Secondary Address Coding:

This technique is for extending the Master Requirement Code so that a unique address is provided for each application of the requirement in relation to the item and is authorized only as instructed within the requirement. Responses coded through this technique will always consist of the following: (1) Master Requirement Codes, (2) indicator code (a single numeric character determined by the number of positions contained), (3) identified secondary address code (1 to 3-digit alphabetic codes determined by the number of predicted replies), (4) the mode code, (5) the reply code and/or clear text response, and (6) end with a record separator (*). Steps (1) through (6) are repeated for each application of the requirement.

(c) AND/OR coding:

A technique for extending the Master Requirement Code to provide a distinctive address for multiple responses to the same requirement. Responses coded through this technique will always consist of (1) Master Requirement Code, (2) mode code, (3) the response or reply code (as instructed by the requirement), (4) a single dollar sign ($) for an OR condition, or a double dollar sign ($$) for an AND condition, (5) the mode code, (6) the response or reply code

(followed by conditions (4) through (6) for each of the multiple responses) and (7) end with a record separator (*). NOTE: Apply this technique only when instructed by the requirement sample reply (e.g.).

(3) Mode Code:

A one-position alphabetic code that specifies the manner in which a response will be prepared. Each requirement assigned a MRC is also assigned a mode code. Sample replies follow each FIIG requirement displaying the proper construction of a response for the assigned mode code. The response to a requirement will always be prepared in accordance with the assigned mode code and sample reply except in the following instances:

(a) Use of E Mode Code replies is not authorized. If a reply needed to describe an item is not listed in the applicable table, contact the FIIG Initiator.

(b) Mode Code K may not be used for any requirement unless instructed by the requirement instructions.

(4) Requirement:

This portion includes the characteristics data elements and data use identifiers required to identify and differentiate one item of supply from another, narrative definitions, and explanations as to use and method of expression. Instructions for coding and preparing replies are also provided.

(5) Reply Code:

A code that represents an established authorized reply to a requirement.

d. Section III - Supplementary Technical and Supply Management Data:

This section includes those characteristics requirements necessary to support specific logistics functions other than National Stock Number assignment.

e. Appendix A - Reply Tables:

Tables of authorized replies to requirements and reply codes when the tables are too lengthy for inclusion in Section I/III, when applicable.

f. Appendix B - Reference Drawings:

This appendix contains representative illustrations which portray specific variations of one or more generic characteristics. If reference drawings contain requirements pages to be used in conjunction with illustrations for dimensioning purposes, the requirements pages will contain Master Requirement Codes, mode codes, and a statement of the requirement. A response to requirements on a requirements page is necessary only for those Master Requirement Codes applicable to the illustration selected.

g. Appendix C - Technical Data Tables:

This appendix contains conversion charts and similar data pertinent to the requirements in Section I/III, when applicable.

3. Enter administrative MRC CLQL immediately following the last FIIG requirement reply, as instructed below:

MRC	Mode Code	Requirement	Example
CLQL	G	COLLOQUIAL NAME (common usage name by which an item is known)	CLQLGWOVEN WIRE CLOTH*

4. Special Instructions and Indicator Definitions

a. Measurements:

Unless otherwise indicated within a requirement example, enter all measurements in decimal form, carried to the nearest three decimal places, with a minimum of one digit preceding the decimal. For SI (metric), enter all measurements with a minimum of one digit before and after the decimal. For fraction to decimal conversion, see Appendix C.

b. Indicators:

A cross hatch (#) following an AIN, MRC, Reply Code or Drawing Number indicates for "ALL EXCEPT USA" use only.

5. Indexes

a. Index of Data Requirements

This index is arranged in alphabetic sequence by Master Requirement Code, cross-referenced to the applicable data requirement and page number(s).

b. Index of Approved Item Names

This index is arranged in alphabetic sequence referenced to Applicability Key.

c. Applicability Key Index

This index is arranged in Applicability Key Sequence.

6. Maintenance

Requests for revisions and other changes will be directed to:

MRC Index

SECTION: A 20
NAME 20
MATL 20
ATYR 20
ATYS 20
BLYC 21
AAJK 21
STYL 21
ANEH 22
ABHP 22
BBPY 22
BLNC 23
BWTR 24
BWTS 24
BWTT 25
BWTW 25
AGYT 25
ACSV 26
ALZD 26
ARDP 27
ABKV 28
BWTX 28
ACVZ 28
BWWB 29
BWWC 29
AWDA 29
AQQT 29
BWWD 30
ARML 30
BNJJ 30
BFZX 31
AWAG 31
BWWF 31
BWWG 31
BWWH 32
BWWJ 32
BWWK 32
BWWL 33
BXLQ 33
BWWM 33
BXLP 33

BBLT 34
ARNF 34
AHSA 34
AMQN 35
APYQ 35
BXLR 35
AQAT 35
AFWL 36
BXLS 36
BXLT 36
ANDG 37
ASNJ 37
ANCZ 37
AFYG 38
BXLW 38
AMGN 38
BXLX 39
ASWN 39
ANFJ 39
BXLY 39
BXLZ 40
BXMB 40
BXMF 40
CBBL 41
SECTION: B 42
NAME 42
MATL 42
ATYR 42
ATYS 42
BLYC 43
SHPE 43
ANEH 43
AWCT 44
AJXE 44
BBLT 44
HUES 45
BKCW 45
AYPX 46
BXMG 46
ABHP 46
ABMK 47
ADAV 47
ANJZ 48
APGF 48

AQLR 48
BXMH 49
SECTION: C 50
NAME 50
MATL 50
ATYR 50
ATYS 50
BLYC 51
BBLT 51
BXMJ 51
SHPE 52
BXMK 52
AGCW 52
ABHP 53
BXML 53
BXMM 54
BXMN 54
BXMP 55
BXMQ 55
BXMR 56
BXMS 56
AQDD 56
BXMT 57
AWDW 57
BTGX 57
BXMW 57
BXMX 58
SECTION: D 59
NAME 59
MATL 59
ATYR 59
ATYS 59
BLYC 60
SHPE 60
ADYY 60
STYL 60
BXNB 61
AQNE 61
AJXE 61
AJJW 61
AAJU 62
AAJW 62
AQHX 62
ACDC 63

ACZB 63
FAAZ 64
AMSE 64
ASDK 64
ATQZ 65
ABHP 65
ABKW 66
ABMK 66
ADAV 67
ABFY 67
BXNC 68
AEAE 68
AEAF 69
BXND 69
NMBR 69
LGTH 70
DMTR 70
BJPS 70
BXNF 71
BXNG 71
BXNH 71
BXNJ 72
BXNK 72
AKYD 72
SECTION: STANDARD 73
FEAT 73
TEST 73
SPCL 74
ZZZK 74
ZZZT 75
ZZZW 75
ZZZX 76
ZZZY 76
CRTL 76
PRPY 77
ELRN 77
ELCD 77
SECTION: SUPPTECH 79
AFJK 79
AGAV 79
SUPP 79
ZZZP 80
ZZZV 80
CXCY 80

INDEX OF APPROVED ITEM NAMES COVERED BY THIS FIIG

Approved Item Name	INC	App Key
BOTTLE AND PIPET, ACID #	13626	CC
BULB, ABSORPTION, GAS ANALYSIS APPARATUS	24391	BA

An item of laboratory glassware designed specifically for the absorption of gases, usually carbon dioxide, as in carbon determinations in steel analysis and like studies. Excludes BULB, LEVELING, GAS ANALYSIS APPARATUS.

BULB, BLOOD SAMPLE CAPILLARY TUBE	20973	BD
BULB, CIRCULATING, LABORATORY	18822	BE

An item with pressure valve on one end and with or without a suction valve on the opposite end. It is usually used for circulating gases or liquids or for taking samples of gases.

BULB, CONNECTING, KJELDAHL	13441	BC
BULB, LEVELING, GAS ANALYSIS APPARATUS	16196	BB
BULB, PRESSURE AND CIRCULATING, LABORATORY	23168	BE

An item with a suction valve at one end and a pressure valve at the other. It is used for applying air pressure to reservoir solutions and washing bottles; for filling bursts; for circulating gases or liquids; or for taking samples of gases. A short length of rubber tubing may be attached to either end.

BULB, PRESSURE, LABORATORY	18823	BE

An item with two valves, used for applying air pressure to reservoir solutions and wash bottles; also used for filling burettes. It may have short length of rubber tube on one end.

CONCENTRATOR, MULTI-SAMPLE, PROTEIN	48960	AA

An item designed to intensify protein in urine or cerebrospinal fluid.

FILLING ATTACHMENT, TEST TUBE	13489	AK

Approved Item Name	INC	App Key
FILTER, SERUM	41423	AA

A filter which provides separation and filtration of serum during centrifugation in blood collection tubes. Excludes SEPARATOR, SERUM AND PLASMA and TUBE, SERUM FILTERING.

HEAD, AIR SAMPLER	27656	AL

A device which holds a number of chemical agent detector tubes in such manner as to draw an atmospheric sample through all tubes simultaneously. It is used in conjunction with a hand operated vacuum pump.

ROD ASSORTMENT, STIRRING, LABORATORY	18817	DB
SEPARATOR, SERUM AND PLASMA	38149	AA

An item filled with an inert gel to form a barrier between serum and plasma during centrifuging of whole blood samples. To be used in conjunction with blood collection tubes. Excludes FILTER, SERUM and TUBE, SERUM FILTERING.

STIRRER, CLOSED SYSTEM #	18911	DA

A device consisting of a stirring rod within a closure system. It is inserted into the neck of a flask for the purpose of stirring liquids by circular motion in a closed container. It does not have an integral power supply.

STIRRER-HOT PLATE, MAGNETIC, LABORATORY	23186	DC

An item which is capable of variable speed stirring and controlled heating simultaneously, or of doing either operation individually. It is used for such applications as digestions, synthesis, vacuum distillation and the like. It consists of a motor driven magnet which rotates under a hot plate mounted over a housing which contains the drive mechanism and controls. The motor driven magnet exerts a torque on a magnetic stirring capsule placed in the liquid to be stirred.

STIRRER, MAGNETIC, LABORATORY	32828	DC

An item which creates variable speed stirring by use of a motor driven magnet which rotates under a plate mounted over its housing. The magnetic field of the motor driven magnet activates a magnetic stirring bar placed in the liquid to be stirred. For items containing a hot plate, see STIRRER-HOT PLATE, MAGNETIC, LABORATORY.

STIRRING BAR, MAGNETIC	58645	DD

An item containing a permanent magnet which is activated externally by the magnetic field of a magnetic laboratory stirrer. It is designed in various configurations to accommodate the stirring of liquids in different shaped vessels. For items furnished with two or more bars of different shapes and/or sizes, see STIRRING BAR SET, MAGNETIC.

Approved Item Name	INC	App Key
STIRRING BAR SET, MAGNETIC	28623	DD

An item of various shapes, sizes and materials containing a permanent magnet. It is used to stir liquids in open or closed vessels, and activated from without, through the rotating magnetic field, of a STIRRER-HOT PLATE, MAGNETIC, LABORATORY.

TUBE, AERATING, UREA DETERMINATION APPARATUS #	16958	AB
TUBE, BIOLOGICAL CULTURE SAMPLING	22476	AA

An item designed for holding samples of biological cultures in laboratory and clinical procedures. May include applicator(s) and cap which has socket for applicator(s). Excludes TUBE, SPECIMEN.

TUBE, COMBUSTION, LABORATORY	18853	AM

A tubular device, usually of glass, used in combustion furnaces to facilitate chemical reactions at high temperatures. It may have both ends open with one end constricted and/or tapered; or one end may be closed. It may also have a side tubulation.

TUBE, DISTILLATION RECEIVING, VACUUM #	17489	AC
TUBE, DUST AND FUME SAMPLER, ELECTROSTATIC #	16764	AL
TUBE, EXTRACTION	16960	AF
TUBE, FAT EXTRACTION #	16931	AJ

An item used to remove fat from dairy products by solvent extraction. Not used in conjunction with other items. See also TUBE, EXTRACTION.

TUBE, GAS DISPERSION #	58638	AH
TUBE, IMMERSION	58639	AH
TUBE KIT, SAMPLING, ELECTROSTATIC DUST AND FUME SAMPLER #	16769	AD
TUBE, SEALING, LABORATORY GLASSWARE #	58640	AH
TUBE, SERUM FILTERING	41422	AA

An item which consists of an open end isolation tube with an inserted filter device in the distal end for removing serum and fibrin from blood collection tubes after centrifuging. May have a one-way check valve. Excludes FILTER, SERUM and SEPARATOR, SERUM AND PLASMA.

Approved Item Name	INC	App Key
TUBE, SPECIMEN	29590	AA

An item consisting of a cylindrical shape with a cap used in the collection of samples. May be sterile and disposable. Excludes TUBE, BIOLOGICAL CULTURE SAMPLING.

TUBE, WATER SAMPLING #	28774	AG

A sterile tubular item used with a WATER SAMPLING KIT, BACTERIOLOGICAL with an adapter on one end for attachment to a filter unit. It is used to transfer water samples to the filter unit.

TUBE, WEIGHING	18840	AE

An ungraduated protective container, usually tubular in shape which may have a stem-like handle and/or a cap on either end. Used to hold substances for which the weight is to be precisely determined; also used for drying and handling of hygroscopic and volatile materials. Excludes BOTTLE, WEIGHING.

WASHER, PIPET, AUTOMATIC	13636	CD
WIRE, CLEANING, PIPET	29054	CE

A corrosion-resisting metal wire suitable for cleaning blood pipets or any capillary bores.

APPLICABILITY KEY INDEX

	AA	AB	AC	AD	AE	AF	AG	AH	AJ	AK
NAME	X	X	X	X	X	X	X	X	X	X
MATT	X	X	X		X	X	X	X	X	X
ATYR	AR	AR	AR		AR	AR	AR	AR	AR	AR
ATYS	AR	AR	AR		AR	AR	AR	AR	AR	AR
BLYC	AR	AR	AR		AR	AR	AR	AR	AR	AR
STYL			X		X					
ANEH						X			X	
ABHP	X	X			X			X		
BBPY	X									
BLNC	AR									
BWTR		X								
BWTS		X								
BWTT					X					
BWTW					X					
AGYT				X			X			
ACSV				X						
ALZD								X		
ARDP								AR		
BWTX										X
ACVZ	AR									
BWWB	AR									
BWWC	AR									
AWDA	AR									
AQQT	AR									
BWWD		X								
ARML		AR								
BNJJ		AR								
BFZX			AR							
AWAG			AR							
BWWF			X							
BWWG			AR							
BWWH			X							
BWWJ			AR							
BWWK			AR							
BWWL			X							
BXLQ			X							
BWWM			AR							
BXLP			X							
BBLT			X			X		X		
ARNF				X						
AHSA				X						
AMQN				X						
APYQ				X						
BXLR				X						
AQAT				X						
AFWL				X						
BXLS				X						
BXLT				X						

ANDG				X						
ASNJ				X						
ANCZ					X					
AFYG					X					
BXLW						X		AR		
AMGN						AR		AR		
BXLX						X		AR		
ASWN						AR		AR		
ANFJ							AR			
BXLY							AR			
BXLZ							AR			
BXMB								AR		
CBBL	AR	AR	AR	AR	AR	AR	AR	AR	AR	AR
FEAT	AR	AR	AR	AR	AR	AR	AR	AR	AR	AR
TEST	AR	AR	AR	AR	AR	AR	AR	AR	AR	AR
SPCL	AR	AR	AR	AR	AR	AR	AR	AR	AR	AR
ZZZK	AR	AR	AR	AR	AR	AR	AR	AR	AR	AR
ZZZT	AR	AR	AR	AR	AR	AR	AR	AR	AR	AR
ZZZW	AR	AR	AR	AR	AR	AR	AR	AR	AR	AR
ZZZX	AR	AR	AR	AR	AR	AR	AR	AR	AR	AR
ZZZY	AR	AR	AR	AR	AR	AR	AR	AR	AR	AR
CRTL	AR	AR	AR	AR	AR	AR	AR	AR	AR	AR
PRPY	AR	AR	AR	AR	AR	AR	AR	AR	AR	AR
ELRN	AR	AR	AR	AR	AR	AR	AR	AR	AR	AR
ELCD	AR	AR	AR	AR	AR	AR	AR	AR	AR	AR
AFJK	AR	AR	AR	AR	AR	AR	AR	AR	AR	AR
AGAV	AR	AR	AR	AR	AR	AR	AR	AR	AR	AR
SUPP	AR	AR	AR	AR	AR	AR	AR	AR	AR	AR
ZZZP	AR	AR	AR	AR	AR	AR	AR	AR	AR	AR
ZZZV	AR	AR	AR	AR	AR	AR	AR	AR	AR	AR
CXCY	AR	AR	AR	AR	AR	AR	AR	AR	AR	AR

	AL	AM
NAME	X	X
MATT	X	X
ATYR	AR	AR
ATYS	AR	AR
BLYC	AR	AR
AAJK		AR
STYL		X
ABHP	X	X
ABKV	X	X
BXMF		AR
CBBL	AR	AR
FEAT	AR	AR
TEST	AR	AR
SPCL	AR	AR
ZZZK	AR	AR
ZZZT	AR	AR
ZZZW	AR	AR
ZZZX	AR	AR
ZZZY	AR	AR
CRTL	AR	AR
PRPY	AR	AR
ELRN	AR	AR
ELCD	AR	AR
AFJK	AR	AR
AGAV	AR	AR
SUPP	AR	AR
ZZZP	AR	AR
ZZZV	AR	AR
CXCY	AR	AR

	BA	BB	BC	BD	BE
NAME	X	X	X	X	X
MATT	X	X	X	X	X
ATYR	AR	AR	AR	AR	AR
ATYS	AR	AR	AR	AR	AR
BLYC	AR	AR	AR	AR	AR
SHPE	X	X	X		X
ANEH	X				
AWCT	X				
AJXE	AR				
BBLT	X	X			X
HUES				X	
BKCW			X		
AYPX			X		
BXMG			X		
ABHP	X	X		X	X
ABMK	X				
ADAV		X	X	X	
ANJZ				X	
APGF				X	
AQLR					X
BXMH					X
FEAT	AR	AR	AR	AR	AR
TEST	AR	AR	AR	AR	AR
SPCL	AR	AR	AR	AR	AR
ZZZK	AR	AR	AR	AR	AR
ZZZT	AR	AR	AR	AR	AR
ZZZW	AR	AR	AR	AR	AR
ZZZX	AR	AR	AR	AR	AR
ZZZY	AR	AR	AR	AR	AR
CRTL	AR	AR	AR	AR	AR
PRPY	AR	AR	AR	AR	AR
ELRN	AR	AR	AR	AR	AR
ELCD	AR	AR	AR	AR	AR
AFJK	AR	AR	AR	AR	AR
AGAV	AR	AR	AR	AR	AR
SUPP	AR	AR	AR	AR	AR
ZZZP	AR	AR	AR	AR	AR
ZZZV	AR	AR	AR	AR	AR
CXCY	AR	AR	AR	AR	AR

	CA	CC	CD	CE
NAME	X	X	X	X
MATT	X		X	X
ATYR	AR		AR	AR
ATYS	AR		AR	AR
BLYC	AR		AR	AR
BBLT	X			
BXMJ	X			
SHPE			X	
BXMK			X	
AGCW				X
ABHP				X
BXML			X	
BXMM			X	
BXMN			X	
BXMP			X	
BXMQ			X	
BXMR			X	
BXMS		X		
AQDD		X		
BXMT		X		
AWDW		AR		
BTGX		AR		
BXMW		AR		
BXMX		AR		
FEAT	AR	AR	AR	AR
TEST	AR	AR	AR	AR
SPCL	AR	AR	AR	AR
ZZZK	AR	AR	AR	AR
ZZZT	AR	AR	AR	AR
ZZZW	AR	AR	AR	AR
ZZZX	AR	AR	AR	AR
ZZZY	AR	AR	AR	AR
CRTL	AR	AR	AR	AR
PRPY	AR	AR	AR	AR
ELRN	AR	AR	AR	AR
ELCD	AR	AR	AR	AR
AFJK	AR	AR	AR	AR
AGAV	AR	AR	AR	AR
SUPP	AR	AR	AR	AR
ZZZP	AR	AR	AR	AR
ZZZV	AR	AR	AR	AR
CXCY	AR	AR	AR	AR

	DA	DB	DC	DD
NAME	X	X	X	X
MATT	X	X		X
ATYR	AR	AR		AR
ATYS	AR	AR		AR
BLYC	AR	AR		AR
SHPE				X
ADYY				X
STYL	X			
BXNB	X			
AQNE	X			
AJXE	AR			
AJJW		X		
AAJU		AR		
AAJW		AR		
AQHX		X		
ACDC			X	
ACZB			AR	
FAAZ			AR	
AMSE			AR	
ASDK			AR	
ATQZ			X	
ABHP	X			
ABKW			X	
ABMK			AR	
ADAV			AR	
ABFY			AR	
BXNC	X			
AEAE	AR			
AEAF	AR			
BXND			X	
NMBR			AR	
LGTH			AR	
DMTR			AR	
BJPS			AR	
BXNF			AR	X
BXNG			AR	AR
BXNH			AR	AR
BXNJ			AR	AR
BXNK			AR	X
AKYD			AR	
FEAT	AR	AR	AR	AR
TEST	AR	AR	AR	AR
SPCL	AR	AR	AR	AR
ZZZK	AR	AR	AR	AR
ZZZT	AR	AR	AR	AR
ZZZW	AR	AR	AR	AR
ZZZX	AR	AR	AR	AR
ZZZY	AR	AR	AR	AR
CRTL	AR	AR	AR	AR
PRPY	AR	AR	AR	AR
ELRN	AR	AR	AR	AR
ELCD	AR	AR	AR	AR
AFJK	AR	AR	AR	AR

AGAV	AR	AR	AR	AR
SUPP	AR	AR	AR	AR
ZZZP	AR	AR	AR	AR
ZZZV	AR	AR	AR	AR
CXCY	AR	AR	AR	AR

Body

SECTION: A

APP Key	MRC	Mode Code	Requirements
ALL			
	NAME	D	ITEM NAME

Definition: A NOUN, WITH OR WITHOUT MODIFIERS, BY WHICH AN ITEM OF SUPPLY IS KNOWN.

Reply Instructions: Enter the Item Name Code. (e.g., NAMED29590)*

AA, AB, AC, AE, AF, AG, AH, AJ, AK, AL, AM

MATL	*D*	*MATERIAL*

Definition: THE ELEMENT, COMPOUND, OR MIXTURE OF WHICH AN ITEM IS FABRICATED, EXCLUDING ANY SURFACE TREATMENT..

Reply Instructions: Enter the applicable Reply Code from Appendix A , Table 1. (e.g., MATLDALC000; MATLDALC000$$DSTB000*; MATLDALC000$DSTB000*)*

NOTE FOR MRCS ATYR, ATYS, BLYC, AND AAJK: IF REPLY GLASS IS ENTERED FOR MRC MATL, REPLY TO THESE MRCS, AS APPLICABLE.

AA*, AB*, AC*, AE*, AF*, AG*, AH*, AJ*, AK*, AL*, AM* (See Note Above)

ATYR	B	LINEAR EXPANSION COEFFICIENT PER DEG CELSIUS

Definition: THE CONSTANT THAT REPRESENTS THE CHANGE IN LINEAR EXPANSION CAUSED BY A CHANGE IN TEMPERATURE, PER DEGREES CELSIUS.

Reply Instructions: Enter the numeric value. (e.g., ATYRB0.0000033*)

AA*, AB*, AC*, AE*, AF*, AG*, AH*, AJ*, AK*, AL*, AM* (See Note Preceding MRC ATYR)

ATYS	F	LINEAR EXPANSION COEFFICIENT TEMP RANGE IN DEG CELSIUS

APP Key	MRC	Mode Code	Requirements

Definition: THE MINIMUM AND MAXIMUM TEMPERATURES TO WHICH THE LINEAR EXPANSION COEFFICIENT APPLIES, EXPRESSED IN DEGREES CELSIUS.

Reply Instructions: Enter the numeric values separated by a slash. Precede each value with the letter P. (e.g., ATYSFP19.0/P350.0*)

For items indicating Fahrenheit and Celsius see Appendix C, Table 2, for conversion.

AA*, AB*, AC*, AE*, AF*, AG*, AH*, AJ*, AK*, AL*, AM* (See Note Preceding MRC ATYR)

BLYC	B	ACID LEACHED GLASS SILICA PERCENTAGE

Definition: THE SILICA CONTENT OF ACID LEACHED GLASS, EXPRESSED IN PERCENT.

Reply Instructions: Enter the numeric value. (e.g., BLYCB96.0*)

AM* (See Note Preceding MRC ATYR)

AAJK	B	MAXIMUM OPERATING TEMP IN DEG CELSIUS

Definition: THE MAXIMUM OPERATING TEMPERATURE AT WHICH THE ITEM IS RATED, EXPRESSED IN DEGREES CELSIUS.

Reply Instructions: Enter the numeric value. (e.g., AAJKB900.0*)

For items indicating Fahrenheit and Celsius see Appendix C, Table 2, for conversion.

AC, AE, AM

STYL	L	STYLE DESIGNATOR

Definition: THE STYLE DESIGNATION INDICATING THE CONFIGURATION THAT MOST NEARLY CORRESPONDS TO THE APPEARANCE OF THE ITEM.

Reply Instructions: Enter the applicable group designator and style number from Appendix B , Reference Drawing Group A, B or C. (e.g., STYLLA1)*

APP Key	MRC	Mode Code	Requirements
AF, AJ			
	ANEH	D	DESIGN DESIGNATION

Definition: THE DESIGNATION DERIVED FROM THE NAME OF THE DESIGNER OR USE FOR WHICH THE ITEM IS INTENDED.

Reply Instructions: Enter the applicable Reply Code from the table below. (e.g., ANEHDBSM*)

REPLY CODE	REPLY (AJ50)
BSM	SOXHLET

AA, AB, AE, AH, AL, AM

	ABHP	J	OVERALL LENGTH

Definition: THE DIMENSION MEASURED ALONG THE LONGITUDINAL AXIS WITH TERMINATED POINTS AT THE EXTREME ENDS OF THE ITEM.

Reply Instructions: Enter the applicable Reply Codes from Tables 1 and 2 below, followed by the numeric value. (e.g., ABHPJAA8.000*; ABHPJLA203.2*; ABHPJAB8.000$$JAC8.125*)

Table 1

REPLY CODE	REPLY (AA05)
A	INCHES
L	MILLIMETERS

Table 2

REPLY CODE	REPLY (AC20)
A	NOMINAL
B	MINIMUM
C	MAXIMUM

AA

	BBPY	J	TOP INSIDE DIAMETER

APP Key	MRC	Mode Code	Requirements

Definition: THE LENGTH OF A STRAIGHT LINE WHICH PASSES THROUGH THE CENTER OF THE TWO INSIDE SURFACES OF A CIRCULAR FIGURE OR BODY, MEASURED AT THE TOP OF THE ITEM, AND TERMINATES AT THE CIRCUMFERENCE.

Reply Instructions: Enter the applicable Reply Codes from Tables 1 and 2 below, followed by the numeric value. (e.g., BBPYJAA0.625*; BBPYJLA15.8*; BBPYJAB0.625$$JAC0.650*)

Table 1

REPLY CODE	REPLY (AA05)
A	INCHES
L	MILLIMETERS

Table 2

REPLY CODE	REPLY (AC20)
A	NOMINAL
B	MINIMUM
C	MAXIMUM

AA*

BLNC J BOTTOM INSIDE DIAMETER

Definition: THE LENGTH OF A STRAIGHT LINE WHICH PASSES THROUGH THE CENTER OF THE BOTTOM OF THE ITEM, AND TERMINATES AT THE INSIDE CIRCUMFERENCE.

Reply Instructions: Enter the applicable Reply Codes from Tables 1 and 2 below, followed by the numeric value. (e.g., BLNCJAA0.438*; BLNCJLA11.2*; BLNCJAB0.438$$JAC0.500*)

Reply to this requirement only if taper tube.

Table 1

REPLY CODE	REPLY (AA05)
A	INCHES
L	MILLIMETERS

Table 2

REPLY CODE	REPLY (AC20)
A	NOMINAL
B	MINIMUM
C	MAXIMUM

APP Key	MRC	Mode Code	Requirements
AB			
	BWTR	J	STEM OUTSIDE DIAMETER

Definition: THE LENGTH OF A STRAIGHT LINE WHICH PASSES THROUGH THE CENTER OF THE STEM, AND TERMINATES AT THE OUTSIDE CIRCUMFERENCE.

Reply Instructions: Enter the applicable Reply Codes from Tables 1 and 2 below, followed by the numeric value. (e.g., BWTRJAA0.406*; BWTRJLA10.7*; BWTRJLB10.7$$JLC11.1*)

Table 1

REPLY CODE	REPLY (AA05)
A	INCHES
L	MILLIMETERS

Table 2

REPLY CODE	REPLY (AC20)
A	NOMINAL
B	MINIMUM
C	MAXIMUM

AB			
	BWTS	J	BULB OUTSIDE DIAMETER

Definition: THE LENGTH OF A STRAIGHT LINE WHICH PASSES THROUGH THE CENTER OF THE BULB, AND TERMINATES AT THE OUTSIDE CIRCUMFERENCE.

Reply Instructions: Enter the applicable Reply Codes from Tables 1 and 2 below, followed by the numeric value. (e.g., BWTSJAA0.406*; BWTSJLA10.7*; BWTSJLB10.7$$JLC11.1*)

Table 1

REPLY CODE	REPLY (AA05)
A	INCHES
L	MILLIMETERS

Table 2

REPLY CODE	REPLY (AC20)

APP Key	MRC	Mode Code	Requirements
		A	NOMINAL
		B	MINIMUM
		C	MAXIMUM

AE

BWTT J CHAMBER INSIDE DIAMETER

Definition: THE LENGTH OF A STRAIGHT LINE WHICH PASSES THROUGH THE CENTER OF THE CHAMBER, AND TERMINATES AT THE INSIDE CIRCUMFERENCE.

Reply Instructions: Enter the applicable Reply Code from the table below, followed by the numeric value. (e.g., BWTTJA0.406*; BWTTJL10.7*)

REPLY CODE	REPLY (AA05)
A	INCHES
L	MILLIMETERS

AE

BWTW J CHAMBER INSIDE LENGTH

Definition: A MEASUREMENT OF THE LONGEST INSIDE DIMENSION OF THE CHAMBER, IN DISTINCTION FROM WIDTH.

Reply Instructions: Enter the applicable Reply Code from the table below, followed by the numeric value. (e.g., BWTWJA1.500*; BWTWJL30.0*)

REPLY CODE	REPLY (AA05)
A	INCHES
L	MILLIMETERS

AD, AG

AGYT J TUBE LENGTH

Definition: A MEASUREMENT OF THE LONGEST DIMENSION OF THE TUBE, IN DISTINCTION FROM WIDTH.

APP Key	MRC	Mode Code	Requirements

Reply Instructions: Enter the applicable Reply Codes from Tables 1 and 2 below, followed by the numeric value. (e.g., AGYTJAA5.250*; AGYTJLA133.3*; AGYTJAB5.250$$JAC5.350*)

Table 1

REPLY CODE	REPLY (AA05)
A	INCHES
L	MILLIMETERS

Table 2

REPLY CODE	REPLY (AC20)
A	NOMINAL
B	MINIMUM
C	MAXIMUM

AD

ACSV	J	TUBE OUTSIDE DIAMETER FOR WHICH DESIGNED

Definition: THE LENGTH OF A STRAIGHT LINE WHICH PASSES THROUGH THE CENTER OF THE TUBE FOR WHICH DESIGNED, AND TERMINATES AT THE OUTSIDE CIRCUMFERENCE.

Reply Instructions: Enter the applicable Reply Codes from Tables 1 and 2 below, followed by the numeric value. (e.g., ACSVJAA1.500*; ACSVJLA38.1*; ACSVJAB1.500$$JAC1.600*)

Table 1

REPLY CODE	REPLY (AA05)
A	INCHES
L	MILLIMETERS

Table 2

REPLY CODE	REPLY (AC20)
A	NOMINAL
B	MINIMUM
C	MAXIMUM

AH

ALZD	J	STEM LENGTH

APP Key	MRC	Mode Code	Requirements

Definition: A MEASUREMENT OF THE LONGEST DIMENSION OF A STEM, IN DISTINCTION FROM WIDTH.

Reply Instructions: Enter the applicable Reply Codes from Tables 1 and 2 below, followed by the numeric value. (e.g., ALZDJAA135.000*; ALZDJLA3429.0*; ALZDJAB135.000$$JAC135.500*)

Table 1

REPLY CODE	REPLY (AA05)
A	INCHES
L	MILLIMETERS

Table 2

REPLY CODE	REPLY (AC20)
A	NOMINAL
B	MINIMUM
C	MAXIMUM

AH*

ARDP	J	DISK DIAMETER

Definition: THE LENGTH OF A STRAIGHT LINE WHICH PASSES THROUGH THE CENTER OF A DISK, AND TERMINATES AT THE CIRCUMFERENCE.

Reply Instructions: Enter the applicable Reply Codes from Tables 1 and 2 below, followed by the numeric value. (e.g., ARDPJAA0.421*; ARDPJLA10.7*; ARDPJLB10.7$$JLC11.1*)

Table 1

REPLY CODE	REPLY (AA05)
A	INCHES
L	MILLIMETERS

Table 2

REPLY CODE	REPLY (AC20)
A	NOMINAL
B	MINIMUM
C	MAXIMUM

AL, AM

APP Key	MRC	Mode Code	Requirements
	ABKV	J	OUTSIDE DIAMETER

Definition: THE LENGTH OF A STRAIGHT LINE WHICH PASSES THROUGH THE CENTER OF A CIRCULAR FIGURE OR BODY, AND TERMINATES AT THE OUTSIDE CIRCUMFERENCE.

Reply Instructions: Enter the applicable Reply Codes from Tables 1 and 2 below, followed by the numeric value. (e.g., ABKVJAA1.500*; ABKVJLA38.1*; ABKVJAB1.500$$JAC1.600*)

Table 1

REPLY CODE	REPLY (AA05)
A	INCHES
L	MILLIMETERS

Table 2

REPLY CODE	REPLY (AC20)
A	NOMINAL
B	MINIMUM
C	MAXIMUM

AK

	BWTX	J	MAXIMUM NECK DIAMETER ACCOMMODATED

Definition: THE MAXIMUM LENGTH OF A STRAIGHT LINE WHICH PASSES THROUGH THE CENTER OF THE NECK, AND TERMINATES AT THE CIRCUMFERENCE.

Reply Instructions: Enter the applicable Reply Code from the table below, followed by the numeric value. (e.g., BWTXJA1.750*; BWTXJL44.4*)

REPLY CODE	REPLY (AA05)
A	INCHES
L	MILLIMETERS

AA*

	ACVZ	D	CAP MATERIAL

APP Key	MRC	Mode Code	Requirements
	Definition: THE ELEMENT, COMPOUND, OR MIXTURE OF WHICH THE CAP IS FABRICATED, EXCLUDING ANY SURFACE TREATMENT.		
	Reply Instructions: Enter the applicable Reply Code from Appendix A , Table 1. (e.g., ACVZDPC0000; ACVZDPC0000$$DRC0000*; ACVZDPC0000$DRC0000*)*		
AA*			
	BWWB	A	CAP SOCKET QUANTITY
	Definition: THE NUMBER OF CAP SOCKETS PROVIDED.		
	Reply Instructions: Enter the quantity. (e.g., BWWBA2*)		
AA*			
	BWWC	A	APPLICATOR QUANTITY
	Definition: THE NUMBER OF APPLICATORS PROVIDED.		
	Reply Instructions: Enter the quantity. (e.g., BWWCA2*; BWWCA1$A2*; BWWCA1$$A1*)		
AA*			
	AWDA	D	APPLICATOR MATERIAL
	Definition: THE ELEMENT, COMPOUND, OR MIXTURE OF WHICH THE APPLICATOR IS FABRICATED, EXCLUDING ANY SURFACE TREATMENT.		
	Reply Instructions: Enter the applicable Reply Code from Appendix A , Table 1. (e.g., AWDADWD0000; AWDADPC0000$$DWD0000*; AWDADPC0000$DWD0000*)*		
AA*			
	AQQT	D	TIP MATERIAL
	Definition: THE ELEMENT, COMPOUND, OR MIXTURE OF WHICH THE TIP IS FABRICATED, EXCLUDING ANY SURFACE TREATMENT.		
	Reply Instructions: Enter the applicable Reply Code from Appendix A , Table 1. (e.g., AQQTDGS0000; AQQTDGS0000$DPC0000*)*		

APP Key	MRC	Mode Code	Requirements
AB			
	BWWD	D	BULB SHAPE

Definition: THE PHYSICAL CONFIGURATION OF THE BULB.

Reply Instructions: Enter the applicable Reply Code from the table below. (e.g., BWWDDAN*)

REPLY CODE	REPLY (AD07)
AN	CYLINDRICAL
DL	SPHERICAL

AB*

ARML	D	PERFORATION FEATURE

Definition: AN INDICATION OF WHETHER OR NOT A PERFORATION FEATURE IS INCLUDED.

Reply Instructions: Enter the applicable Reply Code from the table below. (e.g., ARMLDB*)

REPLY CODE	REPLY (AA49)
B	INCLUDED
C	NOT INCLUDED

AB*

BNJJ	D	SANDBLASTED SPACE FOR MARKING

Definition: AN INDICATION OF WHETHER OR NOT A SANDBLASTED SPACE FOR MARKING IS INCLUDED.

Reply Instructions: Enter the applicable Reply Code from the table below. (e.g., BNJJDB*)

REPLY CODE	REPLY (AA49)
B	INCLUDED
C	NOT INCLUDED

APP Key	MRC	Mode Code	Requirements
AC*			
	BFZX	G	MAJOR GRADUATION UNIT

Definition: THE INCREMENT OF THE MAJOR GRADUATION(S) ON THE ITEM.

Reply Instructions: Enter the reply in clear text. (e.g., BFZXG10, 20, 30, 40, AND 50 ML*)

AC*

AWAG	J	SCALE SMALLEST INCREMENT

Definition: THE SMALLEST VALUE BETWEEN THE MARKINGS ON A SCALE.

Reply Instructions: Enter the applicable Reply Code from the table below, followed by the numeric value. (e.g., AWAGJBC5.0*; AWAGJAM1.0*)

REPLY CODE	REPLY (AG67)
BC	INCHES
AM	MILLILITERS
HC	MILLIMETERS

AC

BWWF	D	RECEIVER JOINT FITTING TYPE

Definition: INDICATES THE TYPE OF RECEIVER JOINT FITTING PROVIDED.

Reply Instructions: Enter the applicable Reply Code from the table below. (e.g., BWWFDAAH*)

REPLY CODE	REPLY (AJ68)
AAE	FEMALE
AAH	MALE

AC*

BWWG	G	RECEIVER JOINT SIZE

APP Key	MRC	Mode Code	Requirements

Definition: DESIGNATES THE SIZE BY WHICH THE RECEIVER JOINT IS COMMERCIALLY KNOWN AND/OR IDENTIFIED.

Reply Instructions: Enter the reply in clear text.

(e.g., BWWGGNO. 24/40 CO-BS GLASS TAPER*)

AC

BWWH D DRAINER JOINT FITTING TYPE

Definition: INDICATES THE TYPE OF DRAINER JOINT FITTING PROVIDED.

Reply Instructions: Enter the applicable Reply Code from the table below. (e.g., BWWHDAAH*)

REPLY CODE	REPLY (AJ68)
AAE	FEMALE
AAH	MALE

AC*

BWWJ G DRAINER JOINT SIZE

Definition: DESIGNATES THE SIZE BY WHICH THE DRAINER JOINT IS COMMERCIALLY KNOWN AND/OR IDENTIFIED.

Reply Instructions: Enter the reply in clear text.

(e.g., BWWJGNO. 24/40 CO-BS GLASS TAPER*)

AC*

BWWK G DRAINER PLUG SIZE

Definition: DESIGNATES THE SIZE BY WHICH THE DRAINER PLUG IS COMMERCIALLY KNOWN AND/OR IDENTIFIED.

Reply Instructions: Enter the reply in clear text.

(e.g., BWWKGNO. 10 CO-BS GLASS TAPER*)

AC

APP Key	MRC	Mode Code	Requirements
	BWWL	J	DRAINER PLUG BORE DIAMETER

Definition: THE LENGTH OF A STRAIGHT LINE WHICH PASSES THROUGH THE CENTER OF A DRAINER PLUG BORE, AND TERMINATES AT THE CIRCUMFERENCE.

Reply Instructions: Enter the applicable Reply Code from the table below, followed by the numeric value. (e.g., BWWLJA8.000*; BWWLJL203.2*)

REPLY CODE	REPLY (AA05)
A	INCHES
L	MILLIMETERS

AC

BXLQ	A	VACUUM LINE PLUG QUANTITY

Definition: THE NUMBER OF VACUUM LINE PLUGS PROVIDED.

Reply Instructions: Enter the quantity. (e.g., BXLQA3*)

AC*

BWWM	G	VACUUM LINE PLUG SIZE

Definition: DESIGNATES THE SIZE BY WHICH THE VACUUM LINE PLUG IS COMMERCIALLY KNOWN AND/OR IDENTIFIED.

Reply Instructions: Enter the reply in clear text.

(e.g., BWWMGNO. 17 CO-BS GLASS TAPER*)

AC

BXLP	J	VACUUM LINE PLUG BORE DIAMETER

Definition: THE LENGTH OF A STRAIGHT LINE WHICH PASSES THROUGH THE CENTER OF A VACUUM LINE PLUG BORE, AND TERMINATES AT THE CIRCUMFERENCE.

Reply Instructions: Enter the applicable Reply Code from the table below, followed by the numeric value. (e.g., BXLPJA0.125*; BXLPJL3.1*)

REPLY CODE	REPLY (AA05)

APP Key	MRC	Mode Code	Requirements
		A	INCHES
		L	MILLIMETERS

AC, AF, AH

BBLT	J	CAPACITY RATING

Definition: A MEASUREMENT OF THE CAPACITY OF AN ITEM.

Reply Instructions: Enter the applicable Reply Codes from Tables 1 and 2 below, followed by the numeric value. (e.g., BBLTJAMA10.0*; BBLTJAEA1.000*; BBLTJAMB10.0$$JAMC21.0*)

For items that do not require a rating, change the Mode Code to K and enter Reply Code N. (e.g., BBLTKN*)

Table 1

REPLY CODE	REPLY (AG67)
AE	FLUID OUNCES
AM	MILLILITERS

Table 2

REPLY CODE	REPLY (AC20)
A	NOMINAL
B	MINIMUM
C	MAXIMUM

AD

ARNF	A	TUBE QUANTITY

Definition: THE NUMBER OF TUBES INCLUDED ON THE ITEM.

Reply Instructions: Enter the quantity. (e.g., ARNFA4*)

AD

AHSA	D	TUBING MATERIAL

Definition: THE ELEMENT, COMPOUND, OR MIXTURE OF WHICH THE TUBING IS FABRICATED, EXCLUDING ANY SURFACE TREATMENT.

Reply Instructions: Enter the applicable Reply Code from Appendix A , Table 1. (e.g., AHSADALC000)*

APP Key	MRC	Mode Code	Requirements
AD			
	AMQN	A	CONDUCTOR QUANTITY

Definition: THE NUMBER OF ELECTRICAL CONDUCTORS INCLUDED ON THE ITEM.

Reply Instructions: Enter the quantity. (e.g., AMQNA2*)

AD

APYQ	D	CONDUCTOR MATERIAL

Definition: THE ELEMENT, COMPOUND, OR MIXTURE OF WHICH THE CONDUCTOR IS FABRICATED, EXCLUDING ANY SURFACE TREATMENT.

Reply Instructions: Enter the applicable Reply Code from Appendix A , Table 1. (e.g., APYQDALC000)*

AD

BXLR	J	CONDUCTOR OUTSIDE DIAMETER

Definition: THE LENGTH OF A STRAIGHT LINE WHICH PASSES THROUGH THE CENTER OF THE CONDUCTOR, AND TERMINATES AT THE OUTSIDE CIRCUMFERENCE.

Reply Instructions: Enter the applicable Reply Code from the table below, followed by the numeric value. (e.g., BXLRJA0.875*; BXLRJL22.2*)

REPLY CODE	REPLY (AA05)
A	INCHES
L	MILLIMETERS

AD

AQAT	A	FUSE QUANTITY

Definition: THE NUMBER OF FUSES PROVIDED.

Reply Instructions: Enter the quantity. (e.g., AQATA2*)

AD

APP Key	MRC	Mode Code	Requirements
	AFWL	D	FUSE TYPE ACCOMMODATED

Definition: INDICATES THE TYPE OF FUSE THE ITEM IS DESIGNED TO ACCOMMODATE.

Reply Instructions: Enter the applicable Reply Code from the table below. (e.g., AFWLDB*)

REPLY CODE	REPLY (AE67)
B	CARTRIDGE
C	PLUG

AD

	BXLS	J	FUSE OVERALL DIAMETER

Definition: A MEASUREMENT OF THE LONGEST STRAIGHT LINE ACROSS THE CIRCULAR CROSS-SECTIONAL PLANE OF THE FUSE.

Reply Instructions: Enter the applicable Reply Codes from Tables 1 and 2 below, followed by the numeric value. (e.g., BXLSJAA0.250*; BXLSJLA6.3*)

Table 1

REPLY CODE	REPLY (AA05)
A	INCHES
L	MILLIMETERS

Table 2

REPLY CODE	REPLY (AC20)
A	NOMINAL
B	MINIMUM
C	MAXIMUM

AD

	BXLT	J	FUSE OVERALL LENGTH

Definition: THE DIMENSION MEASURED ALONG THE LONGITUDINAL AXIS WITH TERMINATED POINTS AT THE EXTREME ENDS OF THE FUSE.

APP Key	MRC	Mode Code	Requirements

Reply Instructions: Enter the applicable Reply Codes from Tables 1 and 2 below, followed by the numeric value. (e.g., BXLTJAA1.000*; BXLTJLA9.0*; BXLTJAB1.000$$JAC1.031*)

Table 1

REPLY CODE	REPLY (AA05)
A	INCHES
L	MILLIMETERS

Table 2

REPLY CODE	REPLY (AC20)
A	NOMINAL
B	MINIMUM
C	MAXIMUM

AD

ANDG	B	FUSE CURRENT RATING IN AMPS

Definition: THE VALUE OF CURRENT FOR WHICH THE FUSE IS RATED, EXPRESSED IN AMPERES.

Reply Instructions: Enter the numeric value. (e.g., ANDGB2.0*)

AD

ASNJ	B	FUSE MAXIMUM VOLTAGE RATING IN VOLTS

Definition: THE MAXIMUM VOLTAGE RATING AT WHICH THE FUSE IS DESIGNED TO OPERATE, EXPRESSED IN VOLTS.

Reply Instructions: Enter the numeric value. (e.g., ASNJB250.0*)

AE

ANCZ	D	CAP

Definition: AN INDICATION OF WHETHER OR NOT A CAP IS INCLUDED.

Reply Instructions: Enter the applicable Reply Code from the table below. (e.g., ANCZDB*)

REPLY CODE	REPLY (AA49)
B	INCLUDED

APP Key	MRC	Mode Code	Requirements
	C		NOT INCLUDED

AE

AFYG D HANDLE

Definition: AN INDICATION OF WHETHER OR NOT THE ITEM IS FURNISHED WITH A HANDLE.

Reply Instructions: Enter the applicable Reply Code from the table below. (e.g., AFYGDF*)

REPLY CODE	REPLY (AA55)
F	FURNISHED
N	NOT FURNISHED

AF, AH*

BXLW D MOUTH CONNECTION TYPE

Definition: INDICATES THE TYPE OF MOUTH CONNECTION PROVIDED.

Reply Instructions: Enter the applicable Reply Code from the table below. (e.g., BXLWDABR*)

REPLY CODE	REPLY (AM35)
ABR	PLAIN
AAD	STANDARD TAPER

NOTE FOR MRC AMGN: IF REPLY CODE AAD IS ENTERED FOR MRC BXLW, ENTER THE SIZE NUMBER.

AF*, AH* (See Note Above)

AMGN G TRADE DESIGNATION

Definition: THE DESIGNATION BY WHICH THE ITEM IS IDENTIFIED THROUGHOUT INDUSTRY.

Reply Instructions: Enter the reply in clear text.

(e.g., AMGNGCO-BS 34/45 SIZE*)

APP Key	MRC	Mode Code	Requirements
AF, AH*			
	BXLX	D	STEM CONNECTION TYPE

Definition: INDICATES THE TYPE OF STEM CONNECTION PROVIDED.

Reply Instructions: Enter the applicable Reply Code from the table below. (e.g., BXLXDAAD*)

REPLY CODE	REPLY (AM35)
ABR	PLAIN
AAD	STANDARD TAPER

NOTE FOR MRC ASWN: IF REPLY CODE AAD IS ENTERED FOR MRC BXLX, ENTER THE SIZE NUMBER.

AF*, AH* (See Note Above)

ASWN	G	SIZE DESIGNATION

Definition: A DESIGNATION INDICATING THE SIZE BY WHICH THE ITEM IS COMMERICALLY KNOWN AND/OR IDENTIFIED.

Reply Instructions: Enter the reply in clear text.

(e.g., ASWNGCO-BS/RT SIZE*)

AG*

ANFJ	D	CONNECTOR TYPE

Definition: INDICATES THE TYPE OF CONNECTOR PROVIDED.

Reply Instructions: Enter the applicable Reply Code from the table below. (e.g., ANFJDAAC*)

REPLY CODE	REPLY (AJ57)
AAC	LUER LOCK HUB
AJM	MALE LUER ADAPTER

AG*

BXLY	J	CONNECTOR DIAMETER

APP Key	MRC	Mode Code	Requirements

Definition: THE LENGTH OF A STRAIGHT LINE WHICH PASSES THROUGH THE CENTER OF THE CONNECTOR, AND TERMINATES AT THE CIRCUMFERENCE.

Reply Instructions: Enter the applicable Reply Code from the table below, followed by the numeric value. (e.g., BXLYJA0.375*; BXLYJL9.5*)

REPLY CODE	REPLY (AA05)
A	INCHES
L	MILLIMETERS

AG*

BXLZ D CONNECTOR MATERIAL

Definition: THE ELEMENT, COMPOUND, OR MIXTURE OF WHICH THE CONNECTOR IS FABRICATED, EXCLUDING ANY SURFACE TREATMENT.

Reply Instructions: Enter the applicable Reply Code from Appendix A , Table 1. (e.g., BXLZDRC0000; BXLZDPC0000$$DRC0000*; BXLZDPC0000$DRC0000*)*

AH*

BXMB D DISK POROSITY

Definition: AN INDICATION OF THE POROSITY OF THE DISK.

Reply Instructions: Enter the applicable Reply Code from the table below. (e.g., BXMBDAE*)

REPLY CODE	REPLY (AF67)
AE	COARSE
AF	EXTRA COARSE
AC	FINE
AD	MEDIUM
AY	ULTRAFINE

AM*

BXMF J SIDE ARM OUTSIDE DIAMETER

APP Key	MRC	Mode Code	Requirements

Definition: THE LENGTH OF A STRAIGHT LINE WHICH PASSES THROUGH THE CENTER OF THE SIDE ARM, AND TERMINATES AT THE OUTSIDE CIRCUMFERENCE.

Reply Instructions: Enter the applicable Reply Code from the table below, followed by the numeric value. (e.g., BXMFJA4.000*; BXMFJL101.6*)

REPLY CODE	REPLY (AA05)
A	INCHES
L	MILLIMETERS

ALL*

CBBL	D	FEATURES PROVIDED

Definition: THOSE FEATURES, NOT OTHERWISE SPECIFIED, WHICH MAY BE REQUIRED FOR PROPER FUNCTIONING OF THE ITEM.

Reply Instructions: Enter the applicable Reply Code from the table below. (e.g., CBBLDAFM*; CBBLDAQE$$DAFM*; CBBLDAFM$DAQE*)

REPLY CODE	REPLY (AN47)
BBU	CAP SECURING FLANGE
BBV	CAP TAB
BCU	CAPILLARY BORE
AQE	DISPOSABLE
BCV	FRICTION CAP
BDU	FRITTED GLASS DISK
AQP	NONSTERILE
BDV	PERFORATED DISK
BEU	SCREW CAP
AFM	STERILE

SECTION: B

APP Key	MRC	Mode Code	Requirements
ALL			
	NAME	D	ITEM NAME

Definition: A NOUN, WITH OR WITHOUT MODIFIERS, BY WHICH AN ITEM OF SUPPLY IS KNOWN.

Reply Instructions: Enter the Item Name Code. (e.g., NAMED24391)*

ALL

MATL	*D*	*MATERIAL*

Definition: THE ELEMENT, COMPOUND, OR MIXTURE OF WHICH AN ITEM IS FABRICATED, EXCLUDING ANY SURFACE TREATMENT.

Reply Instructions: Enter the applicable Reply Code from Appendix A , Table 1. (e.g., MATLDALC000; MATLDALC000$$DSTA000*; MATLDALC000$DSTA000*)*

NOTE FOR MRCS ATYR, ATYS, AND BLYC: IF MATERIAL OF A SPECIFIED COMPOSITION IS REQUIRED, REPLY TO MRCS ATYR, ATYS, AND BLYC, AS APPLICABLE.

ALL* (See Note Above)

ATYR	B	LINEAR EXPANSION COEFFICIENT PER DEG CELSIUS

Definition: THE CONSTANT THAT REPRESENTS THE CHANGE IN LINEAR EXPANSION CAUSED BY A CHANGE IN TEMPERATURE, PER DEGREES CELSIUS.

Reply Instructions: Enter the numeric value. (e.g., ATYRB0.0000033*)

ALL* (See Note Preceding MRC ATYR)

ATYS	F	LINEAR EXPANSION COEFFICIENT TEMP RANGE IN DEG CELSIUS

Definition: THE MINIMUM AND MAXIMUM TEMPERATURES TO WHICH THE LINEAR EXPANSION COEFFICIENT APPLIES, EXPRESSED IN DEGREES CELSIUS.

APP Key	MRC	Mode Code	Requirements

Reply Instructions: Enter the numeric values separated by a slash. Precede values with the letter P. (e.g., ATYSFP19.0/P350.0*)

For items indicating Fahrenheit-Celsius conversion, see Appendix C, Table 2.

ALL* (See Note Preceding MRC ATYR)

BLYC B ACID LEACHED GLASS SILICA PERCENTAGE

Definition: THE SILICA CONTENT OF ACID LEACHED GLASS, EXPRESSED IN PERCENT.

Reply Instructions: Enter the numeric value. (e.g., BLYCB96.0*)

BA, BB, BC, BE

SHPE D SHAPE

Definition: THE PHYSICAL CONFIGURATION OF THE ITEM.

Reply Instructions: Enter the applicable Reply Code from the table below. (e.g., SHPEDDL*)

REPLY CODE	REPLY (AD07)
AN	CYLINDRICAL
AR	ELLIPTICAL
LG	FLAT BOTTOM
BT	OVAL
YZ	PEAR
DL	SPHERICAL
	Spheriod (use Reply Code DL)

BA

ANEH D DESIGN DESIGNATION

Definition: THE DESIGNATION DERIVED FROM THE NAME OF THE DESIGNER OR USE FOR WHICH THE ITEM IS INTENDED.

Reply Instructions: Enter the applicable Reply Code from the table below. (e.g., ANEHDBSP*)

REPLY CODE	REPLY (AJ50)
BSN	FLEMIN-MARTIN
BSP	JOHNSON

APP Key	MRC	Mode Code	Requirements
		BSQ	MIDVALE
		BSR	MILLER
		BSS	NESBITT
		BST	STETSER-NORTON
		BSW	TURNER
		BSX	VANLER

BA

AWCT D MOUTH TYPE

Definition: INDICATES THE TYPE OF MOUTH PROVIDED.

Reply Instructions: Enter the applicable Reply Code from the table below. (e.g., AWCTDAEX*)

REPLY CODE	REPLY (AM35)
AEX	GROUND JOINT
AEY	INVERTED STANDARD TAPER
AAC	SMOOTH
AAD	STANDARD TAPER

NOTE FOR MRC AJXE: IF REPLY CODE AEX IS ENTERED FOR MRC AWCT, ENTER THE STANDARD RUBBER NUMBER. IF REPLY CODE AAD OR AEY IS ENTERED FOR MRC AWCT, ENTER THE STANDARD TAPER SIZE.

BA* (See Note Above)

AJXE A SIZE DESIGNATOR

Definition: A DESIGNATION INDICATING THE SIZE BY WHICH THE ITEM IS COMMERCIALLY KNOWN AND/OR IDENTIFIED.

Reply Instructions: Enter the size designator. (e.g., AJXEA20/40*)

BA, BB, BE

BBLT J CAPACITY RATING

Definition: A MEASUREMENT OF THE CAPACITY OF AN ITEM.

Reply Instructions: Enter the applicable Reply Codes from Tables 1 and 2 below, followed by the numeric value. (e.g., BBLTJAMA10.0*; BBLTJAMB50.0$$JAMC75.0*)

APP Key	MRC	Mode Code	Requirements

Table 1

REPLY CODE	REPLY (AG67)
CC	LITERS
AM	MILLILITERS

Table 2

REPLY CODE	REPLY (AC20)
A	NOMINAL
B	MINIMUM
C	MAXIMUM

BD

HUES D COLOR

Definition: A CHARACTERISTIC OF LIGHT THAT CAN BE SPECIFIED IN TERMS OF LUMINANCE, DOMINANT WAVELENGTH, AND PURITY.

Reply Instructions: Enter the applicable Reply Code from the table below. (e.g., HUESDBL0000*; HUESDBL0000$DWH0000*)

REPLY CODE	REPLY (AD06)
BL0000	BLACK
RE0000	RED
WH0000	WHITE

BC

BKCW D BULB TYPE

Definition: INDICATES THE TYPE OF BULB PROVIDED WITH THE ITEM.

Reply Instructions: Enter the applicable Reply Code from the table below. (e.g., BKCWDBDF*; BKCWDBDF$DBDG*)

REPLY CODE	REPLY (AK39)
BDF	INTERNAL CURVED INLET TUBE
BDG	INTERNAL CURVED OUTLET TUBE

BC

APP Key	MRC	Mode Code	Requirements
	AYPX	D	BAFFLE

Definition: AN INDICATION OF WHETHER OR NOT A BAFFLE IS PROVIDED.

Reply Instructions: Enter the applicable Reply Code from the table below. (e.g., AYPXDB*)

REPLY CODE	REPLY (AB22)
C	NOT PROVIDED
B	PROVIDED

BC

	BXMG	D	OUTLET TUBE SHAPE

Definition: THE PHYSICAL CONFIGURATION OF THE OUTLET TUBE.

Reply Instructions: Enter the applicable Reply Code from the table below. (e.g., BXMGDGH*)

REPLY CODE	REPLY (AD07)
GH	BENT
BK	STRAIGHT

BA, BB, BD, BE

	ABHP	J	OVERALL LENGTH

Definition: THE DIMENSION MEASURED ALONG THE LONGITUDINAL AXIS WITH TERMINATED POINTS AT THE EXTREME ENDS OF THE ITEM.

Reply Instructions: Enter the applicable Reply Codes from Table 1 and 2 below, followed by the numeric value. (e.g., ABHPJAA8.000*; ABHPJLA203.2*; ABHPJAB8.000$$JAC8.125*)

Table 1

REPLY CODE	REPLY (AA05)
A	INCHES
L	MILLIMETERS

Table 2

REPLY CODE	REPLY (AC20)
A	NOMINAL

APP Key	MRC	Mode Code	Requirements
		B	MINIMUM
		C	MAXIMUM

BA

ABMK J OVERALL WIDTH

Definition: AN OVERALL MEASUREMENT TAKEN AT RIGHT ANGLES TO THE LENGTH OF AN ITEM, IN DISTINCTION FROM THICKNESS.

Reply Instructions: Enter the applicable Reply Codes from Tables 1 and 2 below, followed by the numeric value. (e.g., ABMKJAA2.500*; ABMKJLA63.5*; ABMKJAB2.500$$JAC2.625*)

Table 1

REPLY CODE	REPLY (AA05)
A	INCHES
L	MILLIMETERS

Table 2

REPLY CODE	REPLY (AC20)
A	NOMINAL
B	MINIMUM
C	MAXIMUM

BB, BC, BD

ADAV J OVERALL DIAMETER

Definition: A MEASUREMENT OF THE LONGEST STRAIGHT LINE ACROSS A CIRCULAR CROSS-SECTIONAL PLANE.

Reply Instructions: Enter the applicable Reply Codes from Tables 1 and 2 below, followed by the numeric value. (e.g., ADAVJAA2.400*; ADAVJLA60.0*; ADAVJAB2.400$$JAC2.500*)

Table 1

REPLY CODE	REPLY (AA05)
A	INCHES
L	MILLIMETERS

Table 2

REPLY CODE	REPLY (AC20)
A	NOMINAL

APP Key	MRC	Mode Code	Requirements
		B	MINIMUM
		C	MAXIMUM

BD

ANJZ J TUBE ACCOMMODATION OUTSIDE DIAMETER

Definition: THE LENGTH OF A STRAIGHT LINE WHICH PASSES THROUGH THE CENTER OF THE TUBE ACCOMMODATION, AND TERMINATES AT THE OUTSIDE CIRCUMFERENCE.

Reply Instructions: Enter the applicable Reply Codes from Tables 1 and 2 below, followed by the numeric value. (e.g., ANJZJAA0.062*; ANJZJLA1.5*; ANJZJLB1.5$$JLC1.6*)

Table 1

REPLY CODE	REPLY (AA05)
A	INCHES
L	MILLIMETERS

Table 2

REPLY CODE	REPLY (AC20)
A	NOMINAL
B	MINIMUM
C	MAXIMUM

BD

APGF D DESIGN TYPE

Definition: INDICATES THE DESIGN TYPE OF THE ITEM.

Reply Instructions: Enter the applicable Reply Code from the table below. (e.g., APGFDDBJ*)

REPLY CODE	REPLY (AK54)
DBJ	CLOSED TOP
DBK	OPEN TOP

BE

AQLR D VALVE OPERATION METHOD

APP Key	MRC	Mode Code	Requirements

Definition: THE MEANS USED TO CONTROL THE OPERATION OF THE VALVE.

Reply Instructions: Enter the applicable Reply Code from the table below. (e.g., AQLRDSX*; AQLRDGR$$DSX*)

REPLY CODE	REPLY (AC58)
GR	PRESSURE
SX	SUCTION

BE

BXMH	D	VALVE MATERIAL

Definition: THE ELEMENT, COMPOUND, OR MIXTURE OF WHICH THE VALVE IS FABRICATED, EXCLUDING ANY SURFACE TREATMENT.

Reply Instructions: Enter the applicable Reply Code from Appendix A , Table 1. (e.g., BXMHDST0000)*

Enter multiple replies in the same sequence as MRC AQLR. (e.g., BXMHDME0000$$DRCAZ00*)

SECTION: C

APP Key	MRC	Mode Code	Requirements
ALL			
	NAME	D	ITEM NAME

Definition: A NOUN, WITH OR WITHOUT MODIFIERS, BY WHICH AN ITEM OF SUPPLY IS KNOWN.

Reply Instructions: Enter the Item Name Code. (e.g., NAMED16761)*

CA, CD, CE

MATL	*D*	*MATERIAL*

Definition: THE ELEMENT, COMPOUND, OR MIXTURE OF WHICH AN ITEM IS FABRICATED, EXCLUDING ANY SURFACE TREATMENT.

Reply Instructions: Enter the applicable Reply Code from Appendix A , Table 1. (e.g., MATLDGS0000; MATLDGS0000$$DGSR000*; MATLDGS0000$DGSR000*)*

NOTE FOR MRCS ATYR, ATYS, AND BLYC: IF MATERIAL OF SPECIFIED COMPOSITION IS REQUIRED, REPLY TO THESE MRCS, AS APPLICABLE.

CA*, CD*, CE* (See Note Above)

ATYR	B	LINEAR EXPANSION COEFFICIENT PER DEG CELSIUS

Definition: THE CONSTANT THAT REPRESENTS THE CHANGE IN LINEAR EXPANSION CAUSED BY A CHANGE IN TEMPERATURE, PER DEGREES CELSIUS.

Reply Instructions: Enter the numeric value. (e.g., ATYRB0.0000033*)

CA*, CD*, CE* (See Note Preceding MRC ATYR)

ATYS	F	LINEAR EXPANSION COEFFICIENT TEMP RANGE IN DEG CELSIUS

Definition: THE MINIMUM AND MAXIMUM TEMPERATURES TO WHICH THE LINEAR EXPANSION COEFFICIENT APPLIES, EXPRESSED IN DEGREES CELSIUS.

Reply Instructions: Enter the numeric values separated by a slash. Precede values with the letter P. (e.g., ATYSFP19.0/P350.0*)

APP Key	MRC	Mode Code	Requirements

For items indicating Fahrenheit-Celsius conversion, see Appendix C, Table 2.

CA*, CD*, CE* (See Note Preceding MRC ATYR)

BLYC B ACID LEACHED GLASS SILICA PERCENTAGE

Definition: THE SILICA CONTENT OF ACID LEACHED GLASS, EXPRESSED IN PERCENT.

Reply Instructions: Enter the numeric value. (e.g., BLYCB96.0*)

CA

BBLT J CAPACITY RATING

Definition: A MEASUREMENT OF THE CAPACITY OF AN ITEM.

Reply Instructions: Enter the applicable Reply Codes from Tables 1 and 2 below, followed by the numeric value. (e.g., BBLTJAMA18.0*; BBLTJAMB8.9$$JAMC9.1*)

Table 1

REPLY CODE	REPLY (AG67)
AC	CUBIC CENTIMETERS
AM	MILLILITERS

Table 2

REPLY CODE	REPLY (AC20)
A	NOMINAL
B	MINIMUM
C	MAXIMUM

CA

BXMJ D WASHER

Definition: AN INDICATION OF WHETHER OR NOT A WASHER IS INCLUDED.

Reply Instructions: Enter the applicable Reply Code from the table below. (e.g., BXMJDB*)

REPLY CODE	REPLY (AA49)
B	INCLUDED
C	NOT INCLUDED

APP Key	MRC	Mode Code	Requirements

CD

SHPE D SHAPE

Definition: THE PHYSICAL CONFIGURATION OF THE ITEM.

Reply Instructions: Enter the applicable Reply Code from the table below. (e.g., SHPEDAN*)

REPLY CODE	REPLY (AD07)
AN	CYLINDRICAL
RT	RECTANGULAR

CD

BXMK D PIPETTE RACK

Definition: AN INDICATION OF WHETHER OR NOT A PIPETTE RACK IS INCLUDED.

Reply Instructions: Enter the applicable Reply Code from the table below. (e.g., BXMKDB*)

REPLY CODE	REPLY (AA49)
B	INCLUDED
C	NOT INCLUDED

CE

AGCW J WIRE DIAMETER

Definition: THE LENGTH OF A STRAIGHT LINE WHICH PASSES THROUGH THE CENTER OF THE WIRE, AND TERMINATES AT THE CIRCUMFERENCE.

Reply Instructions: Enter the applicable Reply Code from Tables 1 and 2 below, followed by the numeric value. (e.g., AGCWJAA0.012*; AGCWJLA0.2*; AGCWJAB0.012$$JAC0.015*)

Table 1

REPLY CODE	REPLY (AA05)

APP Key	MRC	Mode Code	Requirements

A	INCHES
L	MILLIMETERS

Table 2

REPLY CODE	REPLY (AC20)
A	NOMINAL
B	MINIMUM
C	MAXIMUM

CE

ABHP J OVERALL LENGTH

Definition: THE DIMENSION MEASURED ALONG THE LONGITUDINAL AXIS WITH TERMINATED POINTS AT THE EXTREME ENDS OF THE ITEM.

Reply Instructions: Enter the applicable Reply Codes from Tables 1 and 2 below, followed by the numeric value. (e.g., ABHPJAA8.000*; ABHPJLA203.2*; ABHPJAB8.000$$JAC8.125*)

Table 1

REPLY CODE	REPLY (AA05)
A	INCHES
L	MILLIMETERS

Table 2

REPLY CODE	REPLY (AC20)
A	NOMINAL
B	MINIMUM
C	MAXIMUM

CD

BXML J CHAMBER OVERALL DEPTH

Definition: AN OVERALL MEASUREMENT BETWEEN SPECIFIED POINTS OF A CHAMBER, IN DISTINCTION FROM HEIGHT.

Reply Instructions: Enter the applicable Reply Codes from Tables 1 and 2 below, followed by the numeric value. (e.g., BXMLJAA19.000*; BXMLJLA482.6*; BXMLJAB19.000$$JAC19.500*)

Table 1

REPLY CODE	REPLY (AA05)

APP Key	MRC	Mode Code	Requirements

A	INCHES
L	MILLIMETERS

Table 2

REPLY CODE	REPLY (AC20)
A	NOMINAL
B	MINIMUM
C	MAXIMUM

CD

BXMM J CHAMBER OVERALL DIAMETER

Definition: A MEASUREMENT OF THE LONGEST STRAIGHT LINE ACROSS THE CIRCULAR CROSS-SECTIONAL PLANE OF THE CHAMBER.

Reply Instructions: Enter the applicable Reply Codes from Tables 1 and 2 below, followed by the numeric value. (e.g., BXMMJAA6.000*; BXMMJLA152.4*; BXMMJAB6.000$$JAC6.125*)

Table 1

REPLY CODE	REPLY (AA05)
A	INCHES
L	MILLIMETERS

Table 2

REPLY CODE	REPLY (AC20)
A	NOMINAL
B	MINIMUM
C	MAXIMUM

CD

BXMN J OUTLET NIPPLE OVERALL DIAMETER

Definition: A MEASUREMENT OF THE LONGEST STRAIGHT LINE ACROSS THE CIRCULAR CROSS-SECTIONAL PLANE OF THE OUTLET NIPPLE.

Reply Instructions: Enter the applicable Reply Codes from Tables 1 and 2 below, followed by the numeric value. (e.g., BXMNJAA1.000*; BXMNJLA25.4*; BXMNJAB1.000$$JAC1.125*)

Table 1

REPLY CODE	REPLY (AA05)

APP Key	MRC	Mode Code	Requirements

A	INCHES
L	MILLIMETERS

Table 2

REPLY CODE	REPLY (AC20)
A	NOMINAL
B	MINIMUM
C	MAXIMUM

CD

BXMP D OUTLET NIPPLE CONNECTION TYPE

Definition: INDICATES THE TYPE OF OUTLET NIPPLE CONNECTION PROVIDED.

Reply Instructions: Enter the applicable Reply Code from the table below. (e.g., BXMPDABW*)

REPLY CODE	REPLY (AM35)
AAC	SMOOTH
ABW	THREADED

CD

BXMQ J INLET NIPPLE OVERALL DIAMETER

Definition: A MEASUREMENT OF THE LONGEST STRAIGHT LINE ACROSS THE CROSS-SECTIONAL PLANE OF THE INLET NIPPLE.

Reply Instructions: Enter the applicable Reply Codes from Tables 1 and 2 below, followed by the numeric value. (e.g., BXMQJAA0.375*; BXMQJLA9.5*; BXMQJAB0.375$$JAC0.500*)

Table 1

REPLY CODE	REPLY (AA05)
A	INCHES
L	MILLIMETERS

Table 2

REPLY CODE	REPLY (AC20)
A	NOMINAL
B	MINIMUM

APP Key	MRC	Mode Code	Requirements
		C	MAXIMUM

CD

BXMR D INLET NIPPLE CONNECTION TYPE

Definition: INDICATES THE TYPE OF INLET NIPPLE CONNECTION PROVIDED.

Reply Instructions: Enter the applicable Reply Code from the table below. (e.g., BXMRDAAC*)

REPLY CODE	REPLY (AM35)
AAC	SMOOTH
ABW	THREADED

CC

BXMS J RESERVOIR BOTTLE CAPACITY

Definition: THE CAPACITY OF THE RESERVOIR BOTTLE(S).

Reply Instructions: Enter the applicable Reply Code from the table below, followed by the numeric value. (e.g., BXMSJAN1.500*; BXMSJCC2.0*)

REPLY CODE	REPLY (AG67)
CC	LITERS
AN	OUNCES
AT	QUARTS

CC

AQDD D FEED TYPE

Definition: INDICATES THE TYPE OF FEED PROVIDED.

Reply Instructions: Enter the applicable Reply Code from the table below. (e.g., AQDDDAJ*)

REPLY CODE	REPLY (AK97)
CA	ASPIRATOR BULB
AJ	GRAVITY

APP Key	MRC	Mode Code	Requirements

CC

BXMT D PIPETTE TYPE

Definition: INDICATES THE TYPE OF PIPETTE(S) PROVIDED.

Reply Instructions: Enter the applicable Reply Code from the table below. (e.g., BXMTDAAM*)

REPLY CODE	REPLY (AM54)
AAM	AUTOMATIC
AAN	NONAUTOMATIC

CC*

AWDW B CAPACITY IN MILLILITERS

Definition: THE AMOUNT OF LIQUID, GRANULES, AND THE LIKE, THE ITEM WILL HOLD, EXPRESSED IN MILLILITERS.

Reply Instructions: Enter the numeric value. (e.g., AWDWB17.5*)

CC*

BTGX D STOPCOCK

Definition: AN INDICATION OF WHETHER OR NOT A STOPCOCK IS PROVIDED.

Reply Instructions: Enter the applicable Reply Code from the table below. (e.g., BTGXDB*)

REPLY CODE	REPLY (AB22)
C	NOT PROVIDED
B	PROVIDED

CC*

BXMW D OVERFLOW TUBE

APP Key	MRC	Mode Code	Requirements

Definition: AN INDICATION OF WHETHER OR NOT AN OVERFLOW TUBE IS INCLUDED.

Reply Instructions: Enter the applicable Reply Code from the table below. (e.g., BXMWDB*)

REPLY CODE	REPLY (AA49)
B	INCLUDED
C	NOT INCLUDED

CC*

BXMX	G	PIPETTE TO RESERVOIR SECURING METHOD

Definition: THE MEANS USED TO ATTACH THE PIPETTE TO THE RESERVOIR.

Reply Instructions: Enter the reply in clear text. (e.g., BXMXGINSERTED THRU CAP OF RESERVOIR BOTTLE*)

SECTION: D

APP Key	MRC	Mode Code	Requirements
ALL			
	NAME	D	ITEM NAME

Definition: A NOUN, WITH OR WITHOUT MODIFIERS, BY WHICH AN ITEM OF SUPPLY IS KNOWN.

Reply Instructions: Enter the Item Name Code. (e.g., NAMED18911)*

DA, DB, DD

MATL	*D*	*MATERIAL*

Definition: THE ELEMENT, COMPOUND, OR MIXTURE OF WHICH AN ITEM IS FABRICATED, EXCLUDING ANY SURFACE TREATMENT.

Reply Instructions: Enter the applicable Reply Code from Appendix A , Table 1. (e.g., MATLDALC000; MATLDALC000$$DSTB000*; MATLDALC000$DSTB000*)*

NOTE FOR MRCS ATYR, ATYS, AND BLYC: IF MATERIAL OF A SPECIFIED COMPOSITION IS REQUIRED, REPLY TO THESE MRCS, AS APPLICABLE.

DA*, DB*, DD*(See Note Above)

ATYR	B	LINEAR EXPANSION COEFFICIENT PER DEG CELSIUS

Definition: THE CONSTANT THAT REPRESENTS THE CHANGE IN LINEAR EXPANSION CAUSED BY A CHANGE IN TEMPERATURE, PER DEGREES CELSIUS.

Reply Instructions: Enter the numeric value. (e.g., ATYRB0.0000033*)

DA*, DB*, DD* (See Note Preceding MRC ATYR)

ATYS	F	LINEAR EXPANSION COEFFICIENT TEMP RANGE IN DEG CELSIUS

Definition: THE MINIMUM AND MAXIMUM TEMPERATURES TO WHICH THE LINEAR EXPANSION COEFFICIENT APPLIES, EXPRESSED IN DEGREES CELSIUS.

Reply Instructions: Enter the numeric values separated by a slash. Precede values with the letter P. (e.g., ATYSFP19.0/P350.0*)

APP Key	MRC	Mode Code	Requirements

For items indicating Fahrenheit-Celsius conversion, see Appendix C, Table 2.

DA*, DB*, DD* (See Note Preceding MRC ATYR)

BLYC B ACID LEACHED GLASS SILICA PERCENTAGE

Definition: THE SILICA CONTENT OF ACID LEACHED GLASS, EXPRESSED IN PERCENT.

Reply Instructions: Enter the numeric value. (e.g., BLYCB96.0*)

DD

SHPE D SHAPE

Definition: THE PHYSICAL CONFIGURATION OF THE ITEM.

Reply Instructions: Enter the applicable Reply Code from the table below. (e.g., SHPEDFP*; SHPEDAN$$DAR*)

REPLY CODE	REPLY (AD07)
AN	CYLINDRICAL
FP	DISK
AR	ELLIPTICAL
HE	HEXAGONAL
BM	OBLONG
CT	OCTAGONAL
DL	SPHERICAL

DD

ADYY D COATING MATERIAL

Definition: THE ELEMENT, COMPOUND, OR MIXTURE WITH WHICH THE ITEM IS COATED, EXCLUDING ANY SURFACE TREATMENT.

Reply Instructions: Enter the applicable Reply Code from Appendix A , Table 1. (e.g., ADYYDGS0000; ADYYDPCAAAL$$DPL0000*; ADYYDPCAAAL$DPL0000*)*

For multiple replies use AND coding ($$), entering in the same sequence as MRC SHPE. (e.g., ADYYDGS0000$$DPL0000*)

DA

STYL L STYLE DESIGNATOR

APP Key	MRC	Mode Code	Requirements

Definition: THE STYLE DESIGNATION INDICATING THE CONFIGURATION THAT MOST NEARLY CORRESPONDS TO THE APPEARANCE OF THE ITEM.

Reply Instructions: Enter the group designator and applicable style number from Appendix B , Reference Drawing Group D. (e.g., STYLLD1)*

DA

BXNB A STIRRING ROD STYLE

Definition: THE STYLE DESIGNATION INDICATING THE CONFIGURATION THAT MOST NEARLY CORRESPONDS TO THE APPEARANCE OF THE STIRRING ROD.

Reply Instructions: Enter the group designator and applicable style number from Appendix B , Reference Drawing Group E. (e.g., BXNBAE1)*

DA

AQNE D JOINT TYPE

Definition: INDICATES THE TYPE OF JOINT(S) ON THE ITEM.

Reply Instructions: Enter the applicable Reply Code from the table below. (e.g., AQNEDAAN*)

REPLY CODE	REPLY (AL19)
AAP	STANDARD BALL
AAN	STANDARD TAPER

DA*

AJXE A SIZE DESIGNATOR

Definition: A DESIGNATION INDICATING THE SIZE BY WHICH THE ITEM IS COMMERCIALLY KNOWN AND/OR IDENTIFIED.

Reply Instructions: Enter the size. (e.g., AJXEA24/40*)

DB

AJJW A COMPONENT QUANTITY

APP Key	MRC	Mode Code	Requirements

Definition: THE NUMBER OF COMPONENTS IN THE ITEM.

Reply Instructions: Enter the quantity. (e.g., AJJWA3*)

DB*

AAJU J OVERALL LENGTH

Definition: A MEASUREMENT OF THE LONGEST DIMENSION OF AN ITEM, IN DISTINCTION FROM WIDTH.

Reply Instructions: Enter the applicable Reply Code from the table below, followed by the numeric value. (e.g., AAJUJA1.100*; AAJUJL300.0*)

Enter multiple replies in ascending sequence. (e.g., AAJUJL300.0$$JL400.0$$JL600.0*)

REPLY CODE	REPLY (AA05)
A	INCHES
L	MILLIMETERS

DB*

AAJW J OVERALL DIAMETER

Definition: A MEASUREMENT OF THE LONGEST STRAIGHT LINE ACROSS A CIRCULAR CROSS-SECTIONAL PLANE.

Reply Instructions: Enter the applicable Reply Code from the table below, followed by the numeric value. (e.g., AAJWJA4.000*; AAJWJL101.6*)

Enter multiple replies in the same sequence as MRC AAJU. (e.g., AAJWJL4.0$$JL6.0$$JL8.0*)

REPLY CODE	REPLY (AA05)
A	INCHES
L	MILLIMETERS

DB

AQHX G END PROCESSING

APP Key	MRC	Mode Code	Requirements

Definition: THE END PROCESSING, SUCH AS FLARED, THREADED, UNDERCUT, OR THE LIKE, ON THE ITEM.

Reply Instructions: Enter the reply in clear text. (e.g., AQHXGFINISHED, FLARED*)

DC

ACDC	D	CURRENT TYPE

Definition: INDICATES THE TYPE OF CURRENT WHETHER ALTERNATING, DIRECT, OR BOTH.

Reply Instructions: Enter the applicable Reply Code from the table below. (e.g., ACDCDB*)

REPLY CODE	REPLY (AB62)
B	AC
D	AC/DC
C	DC

DC*

ACZB	J	FREQUENCY RATING

Definition: THE NUMBER OF COMPLETE CYCLIC CHANGES, PER UNIT OF TIME, FOR WHICH AN ITEM IS RATED.

Reply Instructions: Enter the applicable Reply Codes from Tables 1 and 2 below, followed by the numeric value. (e.g., ACZBJEA60.0*; ACZBJEB50.0$$JEC60.0*)

Table 1

REPLY CODE	REPLY (AC32)
G	GIGAHERTZ
E	HERTZ
K	KILOHERTZ
M	MEGAHERTZ

Table 2

REPLY CODE	REPLY (AC20)
A	NOMINAL
B	MINIMUM
C	MAXIMUM

APP Key	MRC	Mode Code	Requirements
DC*			
	FAAZ	D	PHASE

Definition: THE NUMBER OF ALTERNATING CURRENT PHASES.

Reply Instructions: Enter the applicable Reply Code from the table below. (e.g., FAAZDB*)

REPLY CODE	REPLY (AD02)
A	SINGLE
E	SINGLE/THREE
C	THREE
B	TWO

DC*

AMSE J VOLTAGE RATING

Definition: THE VALUE(S) OF POTENTIAL FOR WHICH THE ITEM IS RATED.

Reply Instructions: Enter the applicable Reply Codes from Tables 1 and 2 below, followed by the numeric value. (e.g., AMSEJVA110.0*)

Table 1

REPLY CODE	REPLY (AB63)
K	KILOVOLTS
M	MEGAVOLTS
U	MICROVOLTS
L	MILLIVOLTS
V	VOLTS

Table 2

REPLY CODE	REPLY (AC20)
A	NOMINAL
B	MINIMUM
C	MAXIMUM

DC*

ASDK J WATTAGE RATING IN WATTS

APP Key	MRC	Mode Code	Requirements

Definition: THE RATED POWER THAT AN ITEM CAN SAFELY CONSUME OR PROVIDE, MEASURED IN WATTS.

Reply Instructions: Enter the applicable Reply Code from the table below, followed by the numeric value. (e.g., ASDKJA77.5*)

REPLY CODE	REPLY (AC20)
A	NOMINAL
B	MINIMUM
C	MAXIMUM

DC

ATQZ J MAXIMUM TEMP RATING

Definition: THE MAXIMUM VALUE WHICH EXPRESSES THE DEGREE OF HEAT OR COLD AS APPLIED TO THE OPERATION, OR LIMITATION OF OPERATION, OF AN ITEM.

Reply Instructions: Enter the applicable Reply Code from the table below, followed by the numeric value. (e.g., ATQZJF700.000*; ATQZJC100.0*)

REPLY CODE	REPLY (AB36)
C	DEG CELSIUS (centigrade)
F	DEG FAHRENHEIT

DA

ABHP J OVERALL LENGTH

Definition: THE DIMENSION MEASURED ALONG THE LONGITUDINAL AXIS WITH TERMINATED POINTS AT THE EXTREME ENDS OF THE ITEM.

Reply Instructions: Enter the applicable Reply Codes from Tables 1 and 2 below, followed by the numeric value. (e.g., ABHPJAA8.000*; ABHPJLA203.2*; ABHPJAB8.000$$JAB8.125*)

Table 1

REPLY CODE	REPLY (AA05)
A	INCHES
L	MILLIMETERS

APP Key	MRC	Mode Code	Requirements

Table 2

REPLY CODE	REPLY (AC20)
A	NOMINAL
B	MINIMUM
C	MAXIMUM

DC

ABKW J OVERALL HEIGHT

Definition: THE DISTANCE MEASURED IN A STRAIGHT LINE FROM THE BOTTOM TO THE TOP OF AN ITEM.

Reply Instructions: Enter the applicable Reply Codes from Tables 1 and 2 below, followed by the numeric value. (e.g., ABKWJAA2.500*; ABKWJLA63.5*; ABKWJAB2.500$$JAC2.600*)

Table 1

REPLY CODE	REPLY (AA05)
A	INCHES
L	MILLIMETERS

Table 2

REPLY CODE	REPLY (AC20)
A	NOMINAL
B	MINIMUM
C	MAXIMUM

DC*

ABMK J OVERALL WIDTH

Definition: AN OVERALL MEASUREMENT TAKEN AT RIGHT ANGLES TO THE LENGTH OF AN ITEM, IN DISTINCTION FROM THICKNESS.

Reply Instructions: Enter the applicable Reply Codes from Tables 1 and 2 below, followed by the numeric value. (e.g., ABMKJAA2.500*; ABMKJLA63.5*; ABMKJAB2.500$$JAC2.600*)

Table 1

REPLY CODE	REPLY (AA05)
A	INCHES
L	MILLIMETERS

APP Key	MRC	Mode Code	Requirements

Table 2

REPLY CODE	REPLY (AC20)
A	NOMINAL
B	MINIMUM
C	MAXIMUM

DC*

ADAV J OVERALL DIAMETER

Definition: A MEASUREMENT OF THE LONGEST STRAIGHT LINE ACROSS A CIRCULAR CROSS-SECTIONAL PLANE.

Reply Instructions: Enter the applicable Reply Codes from Tables 1 and 2 below, followed by the numeric value. (e.g., ADAVJAA2.400*; ADAVJLA60.8*; ADAVJAB2.400$$JAC2.500*)

Table 1

REPLY CODE	REPLY (AA05)
A	INCHES
L	MILLIMETERS

Table 2

REPLY CODE	REPLY (AC20)
A	NOMINAL
B	MINIMUM
C	MAXIMUM

DC*

ABFY J OVERALL DEPTH

Definition: AN OVERALL MEASUREMENT BETWEEN SPECIFIED POINTS OF AN ITEM, IN DISTINCTION FROM HEIGHT.

Reply Instructions: Enter the applicable Reply Codes from Tables 1 and 2 below, followed by the numeric value. (e.g., ABFYJAA2.400*; ABFYJLA60.8*; ABFYJAB2.400$$JAC2.500*)

Table 1

REPLY CODE	REPLY (AA05)
A	INCHES
L	MILLIMETERS

APP Key	MRC	Mode Code	Requirements

Table 2

REPLY CODE	REPLY (AC20)
A	NOMINAL
B	MINIMUM
C	MAXIMUM

DA

BXNC D DETACHABLE STIRRING ROD BLADE

Definition: AN INDICATION OF WHETHER OR NOT A DETACHABLE STIRRING ROD BLADE IS INCLUDED.

Reply Instructions: Enter the applicable Reply Code from the table below. (e.g., BXNCDB*)

REPLY CODE	REPLY (AA49)
B	INCLUDED
C	NOT INCLUDED

DA*

AEAE J BLADE LENGTH

Definition: A MEASUREMENT OF THE LONGEST DIMENSION OF THE BLADE, IN DISTINCTION FROM WIDTH.

Reply Instructions: Enter the applicable Reply Codes from Tables 1 and 2 below, followed by the numeric value. (e.g., AEAEJAA7.000*; AEAEJLA50.0*; AEAEJLB70.0$$JLC70.5*)

Table 1

REPLY CODE	REPLY (AA05)
A	INCHES
L	MILLIMETERS

Table 2

REPLY CODE	REPLY (AC20)
A	NOMINAL
B	MINIMUM
C	MAXIMUM

APP Key	MRC	Mode Code	Requirements
DA*			
	AEAF	J	BLADE WIDTH

Definition: A MEASUREMENT TAKEN AT RIGHT ANGLES TO THE LENGTH OF A BLADE, IN DISTINCTION FROM THICKNESS.

Reply Instructions: Enter the applicable Reply Codes from Tables 1 and 2 below, followed by the numeric value. (e.g., AEAFJAA0.906*; AEAFJLA23.0*; AEAFJLB23.0$$JLC23.5*)

Table 1

REPLY CODE	REPLY (AA05)
A	INCHES
L	MILLIMETERS

Table 2

REPLY CODE	REPLY (AC20)
A	NOMINAL
B	MINIMUM
C	MAXIMUM

DC

BXND	D	STIRRING MAGNET

Definition: AN INDICATION OF WHETHER OR NOT A STIRRING MAGNET IS INCLUDED.

Reply Instructions: Enter the applicable Reply Code from the table below. (e.g., BXNDDC*)

REPLY CODE	REPLY (AA49)
B	INCLUDED
C	NOT INCLUDED

DC*

NMBR	A	QUANTITY

Definition: A NUMERIC VALUE WHICH REPRESENTS A POSITIVE WHOLE VALUE WITHOUT REGARD TO ANY UNIT OF MEASURE.

APP Key	MRC	Mode Code	Requirements

Reply Instructions: Enter the quantity. (e.g., NMBRA2*)

DC*

LGTH J LENGTH

Definition: A MEASUREMENT OF THE LONGEST DIMENSION OF AN ITEM, IN DISTINCTION FROM WIDTH.

Reply Instructions: Enter the applicable Reply Code from the table below, followed by the numeric value. (e.g., LGTHJA0.500*; LGTHJL12.7*)

Enter multiple replies in ascending numeric sequence. (e.g., LGTHJA1.000$$JA1.375*)

REPLY CODE	REPLY (AA05)
A	INCHES
L	MILLIMETERS

DC*

DMTR J DIAMETER

Definition: THE LENGTH OF A STRAIGHT LINE WHICH PASSES THROUGH THE CENTER OF A CIRCULAR FIGURE OR BODY, AND TERMINATES AT THE CIRCUMFERENCE.

Reply Instructions: Enter the applicable Reply Code from the table below, followed by the numeric value. (e.g., DMTRJA0.312*; DMTRJL7.0*)

Enter multiple replies in the same sequence as MRC LGTH. (e.g., DMTRJA0.312$$JA0.344*)

REPLY CODE	REPLY (AA05)
A	INCHES
L	MILLIMETERS

DC*

BJPS D CASING MATERIAL

APP Key	MRC	Mode Code	Requirements

Definition: THE ELEMENT, COMPOUND, OR MIXTURE OF WHICH THE CASING IS FABRICATED, EXCLUDING ANY SURFACE TREATMENT.

Reply Instructions: Enter the applicable Reply Code from Appendix A , Table 1. (e.g., BJPSDPC0000)*

Enter multiple replies in the same sequence as MRC LGTH. (e.g., BJPSDGS0000$$DPC0000*)

DD, DC*

BXNF A TOTAL BAR QUANTITY

Definition: THE TOTAL NUMBER OF BARS PROVIDED.

Reply Instructions: Enter the quantity. (e.g, BXNFA4*)

DD*, DC*

BXNG A INDIVIDUAL BAR QUANTITY

Definition: THE NUMBER OF INDIVIDUAL BARS PROVIDED.

Reply Instructions: Enter the quantity. (e.g., BXNGA1*)

For multiple replies use AND coding ($$), entering in the same sequence as MRC SHPE. (e.g., BXNGA1$$A2*)

DD*, DC*

BXNH J BAR OVERALL LENGTH

Definition: THE DIMENSION MEASURED ALONG THE LONGITUDINAL AXIS WITH TERMINATED POINTS AT THE EXTREME ENDS OF THE BAR.

Reply Instructions: Enter the applicable Reply Code from the table below, followed by the numeric value. (e.g., BXNHJA0.250*; BXNHJL6.3*)

For multiple replies use AND coding ($$), entering in the same sequence as MRC SHPE. (e.g., BXNHJA0.500$$JA1.500*)

REPLY CODE	REPLY (AA05)
A	INCHES
L	MILLIMETERS

APP Key	MRC	Mode Code	Requirements
DC*, DD*			
	BXNJ	J	BAR BODY DIAMETER

Definition: THE LENGTH OF A STRAIGHT LINE WHICH PASSES THROUGH THE CENTER OF THE CIRCULAR CROSS-SECTION OF THE BAR BODY, AND TERMINATES AT THE CIRCUMFERENCE.

Reply Instructions: Enter the applicable Reply Code from the table below, followed by the numeric value. (e.g., BXNJJA0.025*; BXNJJL0.5*)

For multiple replies use AND coding ($$), entering in the same sequence as MRC SHPE. (e.g., BXNJJA0.375$$JA0.500*)

REPLY CODE	REPLY (AA05)
A	INCHES
L	MILLIMETERS

DC*, DD

	BXNK	D	PADDLE RING

Definition: AN INDICATION OF WHETHER OR NOT A PADDLE RING IS INCLUDEED.

Reply Instructions: Enter the applicable Reply Code from the table below. (e.g., BXNKDB*)

REPLY CODE	REPLY (AA49)
B	INCLUDED
C	NOT INCLUDED

DC*

	AKYD	G	ACCESSORY COMPONENTS AND QUANTITY

Definition: THE NAME AND NUMBER OF PARTS SUPPLIED WITH THE ITEM WHICH MAY BE REQUIRED FOR APPLICATION.

Reply Instructions: Enter the reply in clear text. (e.g., AKYDGCABLE ASSY 6 FT; SUPPORT ROD 6.0 IN. LG BY 0.5 IN. DIA*)

SECTION: STANDARD

APP Key	MRC	Mode Code	Requirements
ALL*			
	FEAT	G	SPECIAL FEATURES

Definition: THOSE UNUSUAL OR UNIQUE CHARACTERISTICS OR QUALITIES OF AN ITEM NOT COVERED IN THE OTHER REQUIREMENTS AND WHICH ARE DETERMINED TO BE ESSENTIAL FOR IDENTIFICATION.

Reply Instructions: Enter the reply in clear text. Separate multiple replies with a semicolon. (e.g., FEATGADJUSTABLE NOSE CLIP*; FEATGADJUSTABLE NOSE PIECE; DISPOSABLE*)

ALL*

TEST J TEST DATA DOCUMENT

Definition: THE SPECIFICATION, STANDARD, DRAWING, OR SIMILAR INSTRUMENT THAT SPECIFIES ENVIRONMENTAL AND PERFORMANCE REQUIREMENTS OR TEST CONDITIONS UNDER WHICH AN ITEM IS TESTED AND ESTABLISHES ACCEPTABLE LIMITS WITHIN WHICH THE ITEM MUST CONFORM IDENTIFIED BY AN ALPHABETIC AND/OR NUMERIC REFERENCE NUMBER. INCLUDES THE COMMERCIAL AND GOVERNMENT ENTITY (CAGE) CODE OF THE ENTITY CONTROLLING THE INSTRUMENT.

Reply Instructions: Enter the applicable Reply Code from the table below, followed by the 5-position CAGE Code, a dash, and the document identification number.

(e.g., TESTJA12345-CWX654321*;

TESTJA1234A-654321$$JB5556A-663654*;

TESTJAA2345-654321$JB55566-663654*)

REPLY CODE	REPLY (AC28)
A	SPECIFICATION (Includes engineering type bulletins, brochures, etc., that reflect specification type data in specification format; excludes commercial catalogs, industry directories, and similar trade publications, reflecting general type data on certain environmental and performance requirements and test conditions that are shown as "typical," "average," "nominal," etc.)
B	STANDARD (Includes industry or association standards, individual manufacturer standards, etc.)

APP Key	MRC	Mode Code	Requirements
		C	DRAWING (This is the basic governing drawing, such as a contractor drawing, original equipment manufacturer drawing, etc.; excludes any specification, standard, or other document that may be referenced in a basic governing drawing)

ALL*

SPCL G SPECIAL TEST FEATURES

Definition: TEST CONDITIONS AND RATINGS, OR ENVIRONMENTAL AND PERFORMANCE REQUIREMENTS THAT ARE DIFFERENT, MORE CRITICAL, OR MORE SPECIFIC THAN THOSE SPECIFIED IN A GOVERNING TEST DATA DOCUMENT.

Reply Instructions: Enter the reply in clear text. (e.g., SPCLGSELECTED AND TESTED FOR NAVIGATIONAL SYSTEMS*)

ALL*

ZZZK J SPECIFICATION/STANDARD DATA

Definition: THE DOCUMENT DESIGNATOR OF THE SPECIFICATION OR STANDARD WHICH ESTABLISHED THE ITEM OF SUPPLY.

Reply Instructions: Enter the applicable Reply Code from the table below, followed by the Commercial and Government Entity (CAGE) Code of the entity controlling the document, a dash, and the document designator. The agency that controls the limited coordination document must be preceded and followed by a slash following the designator. The word canceled or superseded must be preceded and followed by a slash for the designator. Professional and industrial association specifications/standards are differentiated from a manufacturer's specification in that the data has been coordinated and published by the professional and industrial association. Include amendments and revisions where applicable.

(e.g., ZZZKJT81337-30642B*;

ZZZKJS81349-MIL-D-180 REV1/CANCELED/*;

ZZZKJP80205-NAS1103*;

ZZZKJS81349-MIL-C-1140C/CE/*;

ZZZKJT81337-30642B$$JP80205-NAS1103*)

APP Key	MRC	Mode Code	Requirements

REPLY CODE	REPLY (AN62)
S	GOVERNMENT SPECIFICATION
T	GOVERNMENT STANDARD
D	MANUFACTURERS SOURCE CONTROL
R	MANUFACTURERS SPECIFICATION
N	MANUFACTURERS SPECIFICATION CONTROL
M	MANUFACTURERS STANDARD
B	NATIONAL STD/SPEC
A	PROFESSIONAL/INDUSTRIAL ASSOCIATION SPECIFICATION
P	PROFESSIONAL/INDUSTRIAL ASSOCIATION STANDARD

NOTE FOR MRC ZZZT: IF THE SPECIFICIATION/STANDARD CITED IN REPLY TO MRC ZZZK IS NONDEFINITIVE, REPLY TO MRC ZZZT. THIS REPLY IS THE DATA WHICH IS NOT RECORDED IN SEGMENT C.

ALL* (See Note Above)

ZZZT J NONDEFINITIVE SPEC/STD DATA

Definition: THE NUMBER, LETTER, OR SYMBOL THAT INDICATES THE TYPE, STYLE, GRADE, CLASS, AND THE LIKE, OF AN ITEM IN A NONIDENTIFYING SPECIFICATION OR STANDARD.

Reply Instructions: Enter the applicable Reply Code from Appendix A , Table 2, followed by the appropriate number, letter, or symbol. (e.g., ZZZTJTY1; ZZZTJTY1$$JSTA*; ZZZTJTY1$JSTA*)*

ALL*

ZZZW G DEPARTURE FROM CITED DOCUMENT

Definition: THE TECHNICAL DIFFERENTIATING CHARACTERISTIC(S) OF AN ITEM OF SUPPLY WHICH DEPART(S) FROM THE TEXT OF A SPECIFICATION OR A STANDARD IN THAT IT REPRESENTS A SELECTION OF CHARACTERISTICS STATED IN THE SPECIFICATION OR STANDARD AS BEING OPTIONAL, OR A VARIATION FROM ONE OR MORE OF THE STATED CHARACTERISTICS, OR AN ADDITIONAL CHARACTERISTIC NOT STATED IN THE SPECIFICATION OR STANDARD.

Reply Instructions: Enter the reply in clear text. (e.g., ZZZWGAS MODIFIED BY MATERIAL*)

APP Key	MRC	Mode Code	Requirements
ALL*			
	ZZZX	G	DEPARTURE FROM CITED DESIGNATOR

Definition: THE VARIATION WHEN THE ITEM IS IN CONFORMITY WITH A TYPE DESIGNATOR COVERED BY A SPECIFICATION OR STANDARD, EXCEPT IN REGARD TO ONE OR MORE TECHNICAL DIFFERENTIATING CHARACTERISTICS.

Reply Instructions: Enter the reply in clear text. (e.g., ZZZXGAS MODIFIED BY MATERIAL*)

ALL*

ZZZY	G	REFERENCE NUMBER DIFFERENTIATING CHARACTERISTICS

Definition: A FEATURE OF THE ITEM OF SUPPLY WHICH MUST BE SPECIFICALLY RECORDED WHEN THE REFERENCE NUMBER COVERS A RANGE OF ITEMS.

Reply Instructions: Enter the reply in clear text. (e.g., ZZZYGCOLOR CODED LEADS*; ZZZYGAS DIFFERENTIATED BY MATERIAL*)

ALL*

CRTL	A	CRITICALITY CODE JUSTIFICATION

Definition: THE MASTER REQUIREMENT CODES OF THOSE REQUIREMENTS WHICH ARE TECHNICALLY CRITICAL BY REASON OF TOLERANCE, FIT, PERFORMANCE, OR OTHER CHARACTERISTICS WHICH AFFECT IDENTIFICATION OF THE ITEM.

Reply Instructions: Enter the Master Requirement Code for the requirement, the reply to which renders the item as being critical. (e.g., CRTLAMATL*; CRTLAMATL$$ASURF*)

Reply to this requirement only if the header record for the item identification for the item being identified has been coded as critical.

NOTE FOR MRC PRPY: IF DOCUMENT AVAILABILITY CODE B, D, F, OR H, REPLY TO MRC PRPY.

ALL* (See Note Above)

APP Key	MRC	Mode Code	Requirements
	PRPY	A	PROPRIETARY CHARACTERISTICS

Definition: IDENTIFICATION OF THOSE CHARACTERISTICS INCLUDED IN THE DESCRIPTION FOR WHICH A NON-GOVERNMENT ACTIVITY HAS IDENTIFIED ALL OR SELECTED CHARACTERISTICS OF THE ITEM AS BEING PROPRIETARY AND THEREFORE RESTRICTED FROM RELEASE OUTSIDE THE GOVERNMENT WITHOUT PRIOR PERMISSION OF THE ORIGINATOR OF THE DATA.

Reply Instructions: Enter the MRC codes of the individual characteristics of the description which are marked proprietary on the technical data, using AND coding ($$) for multiple characteristics. If all the MRCs are proprietary, enter the reply PACS. If none of the MRCs is proprietary, enter the reply NPAC. (e.g., PRPYAPACS*; PRPYANPAC*; PRPYAMATL$$ASURF*)

ALL*

ELRN	G	EXTRA LONG REFERENCE NUMBER

Definition: A REFERENCE NUMBER EXCEEDING 32 POSITIONS.

Reply Instructions: Enter the entire reference number. Do not include the 5-position Commercial and Government Entity (CAGE) Code unless there is more than one extra long reference number on the NSN, (e.g., ELRNGANN112036BIL060557LEN313605UZ62365*).

If there is more than one extra long reference number on the NSN, include the CAGE or NCAGE and separate each reference by using the "&" character, (e.g., 28480 ANN112036BIL060557LEN313605UZ62365 & S1234 NN112036BIL060557LEN313605UZ62365).

In determining quantity of characters in the reference number, count will be made after modification in accordance with Volume 2, Chapter 9, FLIS Procedures Manual, DoD 4100.39-M.

ALL*

ELCD	D	EXTRA LONG CHARACTERISTIC DESCRIPTION

Definition: A DESCRIPTION THAT EXCEEDS 5000 CHARACTERS.

Reply Instructions: Enter the Reply Code from the table below. (e.g., ELCDDA*)

REPLY CODE	REPLY (AN58)

APP Key	MRC	Mode Code	Requirements
		A	ADDITIONAL DESCRIPTIVE DATA ON MANUAL RECORD

SECTION: SUPPTECH

APP Key	MRC	Mode Code	Requirements
ALL			
	AFJK	J	CUBIC MEASURE

Definition: A MEASUREMENT OF VOLUME TAKEN BY MULTIPLYING THE LENGTH BY THE WIDTH BY THE HEIGHT OF AN ITEM AND RENDERED IN CUBIC UNITS.

Reply Instructions: Enter the applicable Reply Code from the table below, followed by the numeric value. (e.g., AFJKJF27.000*; AFJKJC25.0*)

REPLY CODE	REPLY (AD42)
C	CUBIC CENTIMETERS
F	CUBIC FEET
B	CUBIC INCHES
E	CUBIC METERS

ALL

AGAV G END ITEM IDENTIFICATION

Definition: THE NATIONAL STOCK NUMBER OR THE IDENTIFICATION INFORMATION OF THE END EQUIPMENT FOR WHICH THE ITEM IS A PART.

Reply Instructions: Enter the applicable reply in clear text.

(e.g., AGAVG3930-00-000-0000*;

AGAVGFORKLIFT TRUCK, SMITH CORPORATION, MODEL 12, TYPE A*)

ALL

SUPP G SUPPLEMENTARY FEATURES

Definition: CHARACTERISTICS OR QUALITIES OF AN ITEM, NOT COVERED IN ANY OTHER REQUIREMENT, WHICH ARE CONSIDERED ESSENTIAL INFORMATION FOR ONE OR MORE FUNCTIONS EXCLUDING NSN ASSIGNMENT.

Reply Instructions: Enter the reply in clear text. (e.g., SUPPGMAY INCL HOLE IN UPPER SUPPORT FOR MTG DURING SHIPMENT.)

ALL

APP Key	MRC	Mode Code	Requirements
	ZZZP	J	PURCHASE DESCRIPTION IDENTIFICATION

Definition: THE CONTROLLING ACTIVITY AND IDENTIFICATION OF A DOCUMENT USED IN LIEU OF A SPECIFICATION IN THE PROCUREMENT OF AN ITEM OF SUPPLY.

Reply Instructions: Enter the 5-position Commercial and Government Entity (CAGE) Code, followed by a dash and the identifying number of the document.

(e.g., ZZZPJ81337-30642A*)

ALL

	ZZZV	G	FSC APPLICATION DATA

Definition: THE JUSTIFICATION FOR THE ASSIGNMENT OF A FEDERAL SUPPLY CLASS (FSC) TO AN ITEM BASED ON THE CLASSIFICATION OF THE NEXT HIGHER CLASSIFIABLE ASSEMBLY.

Reply Instructions: Enter the name of the next higher classifiable assembly in clear text. (e.g., ZZZVGFUEL SYSTEM, GASOLINE ENGINE, NONAIRCRAFT*)

ALL

	CXCY	G	PART NAME ASSIGNED BY CONTROLLING AGENCY

Definition: THE NAME ASSIGNED TO THE ITEM BY THE GOVERNMENT AGENCY OR COMMERCIAL ORGANIZATION CONTROLLING THE DESIGN OF THE ITEM.

Reply Instructions: Enter the reply in clear text. (e.g., CXCYGLINE PROCESSOR CONTROL BOARD*)

Reply Tables

Table 1 - MATERIALS 82
Table 2 - NONDEFINITIVE SPEC/STD DATA 82

Table 1 - MATERIALS
MATERIALS

REPLY CODE	*REPLY (AD09)*
ALC000	*ALUMINUM*
AL0000	*ALUMINUM ALLOY*
BR0000	*BRASS*
CP0000	*CARDBOARD*
CC0000	*COTTON*
FBAF00	*FIBER, POLYESTER*
GS0000	*GLASS*
GSR000	*GLASS, BOROSILICATE*
GS0167	*GLASS, FED DD-G-541, TYPE 1*
GS0035	*GLASS, FED DD-G-541, TYPE 1, CLASS A*
GS0166	*GLASS, FED DD-G-541, TYPE 2*
ME0000	*METAL*
PF0000	*PAPER*
PC0000	*PLASTIC*
PCCCS0	*PLASTIC, LOW-LOSS*
PCCR00	*PLASTIC, POLYETHYLENE*
PCAC00	*PLASTIC, POLYETHYLENE TEREPHTHALATE*
PCAF00	*PLASTIC, POLYPROPYLENE*
PCAG00	*PLASTIC, POLYSTYRENE*
PCAK00	*PLASTIC, POLYVINYL CHLORIDE*
PCAAAL	*PLASTIC, TETRAFLUOROETHYLENE*
PL0000	*POLYAMIDE, NYLON*
RL0000	*RAYON*
RC0000	*RUBBER*
RCAAH0	*RUBBER, COMPOUND*
RCAZ00	*RUBBER, HARD*
RCB000	*RUBBER, NATURAL*
RCC000	*RUBBER, SYNTHETIC*
ABBH00	*SILICATE*
ST0000	*STEEL*
STB000	*STEEL, CORROSION RESISTING*
WD0000	*WOOD*
ZR0000	*ZIRCONIUM*

Table 2 - NONDEFINITIVE SPEC/STD DATA
NONDEFINITIVE SPEC/STD DATA

REPLY CODE	REPLY (AD08)
AL	ALLOY
AN	ANNEX
AP	APPENDIX
AC	APPLICABILITY CLASS

REPLY CODE	REPLY (AD08)
AR	ARRANGEMENT
AS	ASSEMBLY
AB	ASSORTMENT
BX	BOX
CY	CAPACITY
CA	CASE
CT	CATEGORY
CL	CLASS
CE	CODE
CR	COLOR
CC	COMBINATION CODE
CN	COMPONENT
CP	COMPOSITION
CM	COMPOUND
CD	CONDITION
CS	CONSTRUCTION
DE	DESIGN
DG	DESIGNATOR
DW	DRAWING NUMBER
EG	EDGE
EN	END
FY	FAMILY
FG	FIGURE
FN	FINISH
FM	FORM
FA	FORMULA
GR	GRADE
GP	GROUP
BA	IMAGE COLOR
NS	INSERT
TM	ITEM
KD	KIND
KT	KIT
LG	LENGTH
LT	LIMIT
MK	MARK
AA	MARKER
ML	MATERIAL
BB	MAXIMUM DENSITY
MH	MESH
ME	METHOD
BC	MINIMUM DENSITY
MD	MODEL
MT	MOUNTING
NR	NUMBER
PT	PART
PN	PATTERN
PC	PHYSICAL CONDITION

REPLY CODE	REPLY (AD08)
PS	PIECE
PL	PLAN
PR	POINT
QA	QUALITY
RN	RANGE
RT	RATING
RF	REFERENCE NUMBER
SC	SCHEDULE
SB	SECTION
SL	SELECTION
SE	SERIES
SV	SERVICE
SX	SET
SA	SHADE
SH	SHAPE
SG	SHEET
SZ	SIZE
PZ	SPECIES
SQ	SPECIFICATION SHEET
SD	SPEED
ST	STYLE
SS	SUBCLASS
SF	SUBFORM
SP	SUBTYPE
SN	SURFACE CONDITION
SY	SYMBOL
SM	SYSTEM
TB	TABLE
TN	TANNAGE
TP	TEMPER
TX	TEXTURE
TK	THICKNESS
TT	TREATMENT
TR	TRIM
TY	TYPE
YN	UNIT
VA	VARIETY
WT	WEIGHT
WD	WIDTH

Reference Drawing Groups

REFERENCE DRAWING GROUP A 86
REFERENCE DRAWING GROUP B 87
REFERENCE DRAWING GROUP C 88
REFERENCE DRAWING GROUP D 89
REFERENCE DRAWING GROUP E 90

REFERENCE DRAWING GROUP A

LABORATORY COMBUSTION TUBES

(No Requirements)

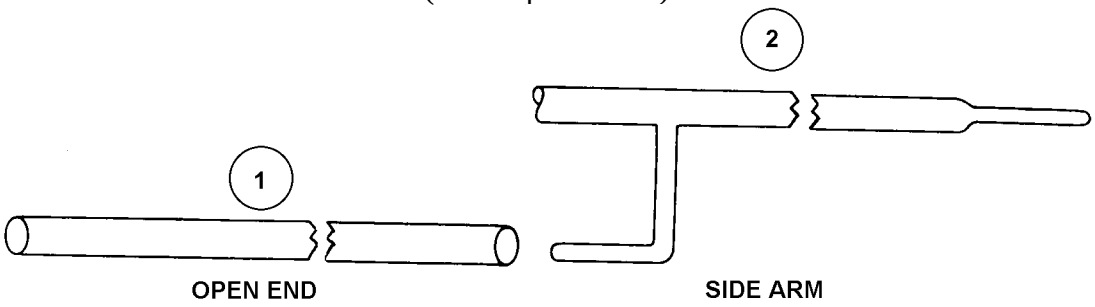

REFERENCE DRAWING GROUP B

WEIGHING TUBES

(No Requirements)

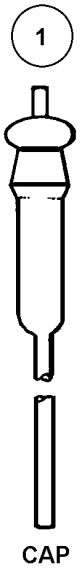

REFERENCE DRAWING GROUP C

VACUUM DISTILLATION RECEIVING TUBES

(No Requirements)

1

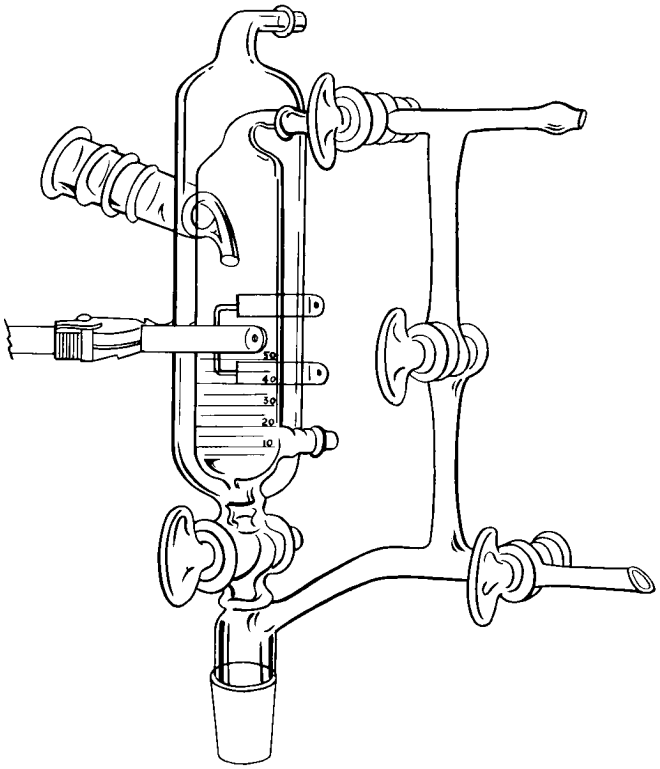

GRADUATED

REFERENCE DRAWING GROUP D

CLOSURE STYLES

(No Requirements)

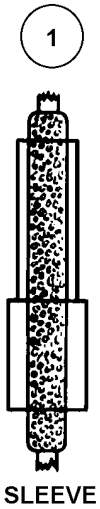

REFERENCE DRAWING GROUP E

ROD STYLES

(No Requirements)

BUTTON

Technical Data Tables

INCH TO DECIMAL OF A FOOT CONVERSION CHART 92
CELSIUS-FAHRENHEIT CONVERSION TABLE 92
OUNCE TO DECIMAL OF A POUND CONVERSION CHART 94
STANDARD FRACTION TO DECIMAL CONVERSION CHART 96

INCH TO DECIMAL OF A FOOT CONVERSION CHART

NOTE: For inches, select inches 0 through 11 from left to right top of chart, read decimal equivalent in column directly below.

Fraction of inch	INCHES											
	0	1	2	3	4	5	6	7	8	9	10	11
0	0.000	0.083	0.167	0.250	0.333	0.417	0.500	0.583	0.667	0.750	0.833	0.917
1/16	.005	.089	.172	.255	.339	.422	.505	.589	.672	.755	.839	.922
1/8	.010	.094	.177	.260	.344	.427	.510	.594	.677	.760	.844	.927
3/16	.016	.099	.182	.266	.349	.432	.516	.599	.682	.766	.849	.932
1/4	.021	.104	.188	.271	.354	.438	.521	.604	.688	.771	.854	.938
5/16	.026	.109	.193	.276	.359	.443	.526	.609	.693	.776	.859	.943
3/8	.031	.115	.198	.281	.365	.448	.531	.615	.698	.781	.865	.948
7/16	.037	.120	.203	.287	.370	.453	.537	.620	.703	.787	.870	.953
1/2	.042	.125	.208	.292	.375	.458	.542	.625	.708	.792	.875	.958
9/16	.047	.130	.214	.297	.380	.464	.547	.630	.714	.797	.880	.964
5/8	.052	.135	.219	.302	.385	.469	.552	.635	.719	.802	.885	.969
11/16	.057	.141	.224	.307	.391	.474	.557	.641	.724	.807	.891	.974
3/4	.063	.146	.229	.313	.396	.479	.563	.646	.729	.813	.896	.979
13/16	.068	.151	.234	.318	.401	.484	.568	.651	.734	.818	.901	.984
7/8	.073	.156	.240	.323	.406	.490	.573	.656	.740	.823	.906	.990
15/16	.078	.162	.245	.328	.412	.495	.578	.662	.745	.828	.912	.995

CELSIUS-FAHRENHEIT CONVERSION TABLE

CONVERTED TO CELSIUS	TEMP READING	CONVERTED TO FAHRENHEIT
-62.2	-80	-112.0
-56.7	-70	-94.0
-51.1	-60	-76.0
-45.6	-50	-58.0
-40.0	-40	-40.0
-34.4	-30	-22.0
-31.7	-25	-13.0
-28.9	-20	-4.0
-26.1	-15	+5.0
-23.3	-10	14.0
-20.6	-5	23.0
-17.8	0	32.0
-15.0	5	41.0
-12.22	10	50.0

CONVERTED TO CELSIUS	TEMP READING	CONVERTED TO FAHRENHEIT
-9.44	15	59.0
-6.67	20	68.0
-3.89	25	77.0
-1.11	30	86.0
1.67	35	95.0
4.44	40	104.0
7.22	45	113.0
10.00	50	122.0
12.78	55	131.0
15.56	60	140.0
18.33	65	149.0
21.11	70	158.0
23.89	75	167.0
26.67	80	176.0
29.44	85	185.0
32.22	90	194.0
35.00	95	203.0
37.78	100	212.0
40.56	105	221.0
43.33	110	230.0
46.11	115	239.0
48.89	120	248.0
51.67	125	257.0
54.44	130	266.0
57.22	135	275.0
60.00	140	284.0
65.56	150	302.0
71.11	160	320.0
76.67	170	338.0
82.22	180	356.0
87.78	190	374.0
93.33	200	392.0
98.89	210	410.0
104.44	220	428.0
110.00	230	446.0
115.56	240	464.0
121.11	250	482.0
126.67	260	500.0
132.22	270	518.0
137.78	280	536.0
143.33	290	554.0
148.89	300	572.0
154.44	310	590.0
160.00	320	608.0

CONVERTED TO CELSIUS	TEMP READING	CONVERTED TO FAHRENHEIT
165.66	330	626.0
171.11	340	644.0
176.67	350	662.0
182.22	360	680.0
187.78	370	698.0
193.33	380	716.0
198.89	390	734.0
204.44	400	752.0
210.00	410	770.0
215.56	420	788.0
221.11	430	806.0
226.67	440	824.0
232.22	450	842.0
237.78	460	860.0
243.33	470	878.0
248.89	480	896.0
254.44	490	914.0
260.00	500	932.0
265.56	510	950.0
271.11	520	968.0
276.67	530	986.0
282.22	540	1004.0
287.78	550	1022.0

The middle column of figures contains the reading (|SDF or |SDC) to be converted. If converting from degrees Fahrenheit to degrees Celsius, read the Celsius equivalent in the column headed "Converted to Celsius". If converting from Celsius to Fahrenheit, read the Fahrenheit equivalent in the column headed "Converted to Fahrenheit".

OUNCE TO DECIMAL OF A POUND CONVERSION CHART

OUNCES	POUNDS
1	0.062
2	0.125
3	0.188
4	0.250
5	0.312
6	0.375
7	0.438
8	0.500

OUNCES	POUNDS
9	0.562
10	0.625
11	0.688
12	0.750
13	0.812
14	0.875
15	0.938
16	1.000

STANDARD FRACTION TO DECIMAL CONVERSION CHART

4ths	8ths	16ths	32nds	64ths	To 3	To 4	4ths	8ths	16ths	32nds	64ths	To 3	To 4
				1/64	.016	.0156					33/64	.516	.5156
			1/32	-----	.031	.0312				17/32	------	.531	.5312
				3/64	.047	.0469					35/64	.547	.5469
		1/16	-----		.062	.0625			9/16	-----	-----	.562	.5625
				5/64	.078	.0781					37/64	.578	.5781
			3/32	-----	.094	.0938				19/32	------	.594	.5938
				7/64	.109	.1094					39/64	.609	.6094
	1/8	-----	-----	-----	.125	.1250		5/8	-----	-----	-----	.625	.6250
				9/64	.141	.1406					41/64	.641	.6406
			5/32	-----	.156	.1562				21/32	------	.656	.6562
				11/64	.172	.1719					43/64	.672	.6719
		3/16	-----	-----	.188	.1875			11/16	-----	-----	.688	.6875
				13/64	.203	.2031					45/64	.703	.7031
			7/32	------	.219	.2188				23/32	------	.719	.7188
				15/64	.234	.2344					47/64	.734	.7344
1/4	-----	-----	-----	-----	.250	.2500	3/4	-----	-----	-----	-----	.750	.7500
				17/64	.266	.2656					49/64	.766	.7656
			9/32	------	.281	.2812				25/32	------	.781	.7812
				19/64	.297	.2969					51/64	.797	.7969
		5/16	-----	-----	.312	.3125			13/16	-----	-----	.812	.8125
				21/64	.328	.3281					53/64	.828	.8281
			11/32	------	.344	.3438				27/32	------	.844	.8438
				23/64	.359	.3594					55/64	.859	.8594
	3/8	-----	-----	-----	.375	.3750		7/8	-----	-----	-----	.875	.8750
				25/64	.391	.3906					57/64	.891	.8906
			13/32	------	.406	.4062				29/32	------	.906	.9062
				27/64	.422	.4219					59/64	.922	.9219
		7/16	-----	-----	.438	.4375			15/16	-----	-----	.938	.9375
				29/64	.453	.4531					61/64	.953	.9531
			15/32	------	.469	.4688				31/32	------	.969	.9688
				31/64	.484	.4844					63/64	.984	.9844
					.500	.5000						1.000	1.0000

FIIG Change List

FIIG Change List, October 3, 2009

Changed MATT to MATL

Changed Appendix A, Table 1 to AD09