FEDERAL ITEM IDENTIFICATION GUIDE

BENDING, CUTTING, AND FORMING MACHINES AND TOOLS FOR SECONDARY METAL WORKING

This Reprint replaces FIIG T337, dated July 2, 2010.

Commander

Defense Logistics Information Service

ATTN: DLIS-K

74 Washington Avenue North, Suite 7

Battle Creek, Michigan 49037-3084

(COMM) (269) 961-5779

(DSN) 661-5779

PUBLISHED BY DEFENSE LOGISTICS INFORMATION SERVICE, BATTLE CREEK, MI

This Federal Item Identification Guide for Supply Cataloging is issued under the authority of Department of Defense Instruction 5025.7.

The use of this publication is mandatory for US. Federal Activities participating in Federal Catalog System Operations.

BY ORDER OF THE DIRECTOR

/s/

Commander

Defense Logistics Information Service

Contents

GENERAL INFORMATION 1
MRC Index 6
INDEX OF APPROVED ITEM NAMES COVERED BY THIS FIIG 10
APPLICABILITY KEY INDEX 12
Body 24
SECTION: A 24
SECTION: B 33
SECTION: C 43
SECTION: D 45
SECTION: E 49
SECTION: F 53
SECTION: G 54
SECTION: H 55
SECTION: J 59
SECTION: K 62
SECTION: STANDARD 71
SECTION: SUPPTECH 76
Reply Tables 80
Reference Drawing Groups 83
Technical Data Tables 93
FIIG Change List 97

GENERAL INFORMATION

1. Purpose and Scope

This Federal Item Identification Guide (FIIG) is a self-contained document for the collection, coding, transmittal, and retrieval of item characteristics and related supply management data for an item of supply for logistical use. This FIIG is to be used to describe items of supply identified by the index of approved item names appearing in this section.

2. Contents

This FIIG is comprised of the following:

Index of Approved Item Names Covered by this FIIG
Applicability Key Index
Section I - Item Characteristics Data Requirements
Section III - New text that should be here.
Appendix A - Reply Tables
Appendix B - Reference Drawing Groups (as applicable)
Appendix C - Technical Data Tables (as applicable)

a. Index of Approved Item Names Covered by this FIIG:

The index lists the approved item names with definitions and item name codes as they appear in Cataloging Handbook H6, applicable to this FIIG. In addition, each name entry is assigned an applicability key for use in relating the characteristics requirements in Section I to the specific item name.

b. Applicability Key Index:

The purpose of this index is to provide the user with a ready reference for determining the specific requirements which are applicable to a given approved item name. This index lists all requirements in sequence as they appear in the FIIG. The applicability of a Master Requirement Coded requirement is indicated by the column headed by the specific item name applicability key as follows:

(1) The letter "X" indicates the requirement must be answered for a full descriptive item.

(2) The letters "AR" indicate the requirement is to be answered as required by (1) instructional notes within the FIIG; (2) when the reply is predicated on replies to a related main requirement; or (3) when an asterisk (*) is used in conjunction with the applicability key column in Section I.

(3) A blank in the column indicates the requirement is not applicable to the specific item name.

c. Section I - Item Characteristics Data Requirements:

This section contains the physical and performance characteristics requirements needed to describe and identify an item of supply. These characteristics differentiate one item from all other items of supply and are to be used to meet the needs of all supported functions. This section is arranged in columns. Identification of each column and instructions pertinent thereto are as follows:

(1) Applicability Key:

The first column shows the applicability key(s) for each requirement. It indicates whether the requirement need be satisfied for the item being identified. "ALL" indicates that the requirement must be answered for all items covered by the FIIG. One or more alphabetic character(s) or group of one or more alphabetic characters indicates a response is required when describing items with an approved item name or names represented by the key(s). An asterisk (*) used in conjunction with any applicability key indicates that the characteristic stated in the requirement may not be applicable to all items covered by the FIIG.

(2) Master Requirement Codes (MRC):

A four-position code which is assigned to a FIIG requirement for identification of the requirement, cross-referencing requirements in the various sections and appendices of the FIIG, and for mechanized processing and retrieval of FIIG generated data. Absence of a MRC for a requirement indicates a lead-in to requirements with individual MRCs in Appendix B.

(a) The coding technique for providing MULTIPLE/OPTIONAL responses will not be used for a Section I requirement assigned Mode Code A or L that leads to Appendix B sketches with dimensional requirements.

(b) Identified Secondary Address Coding:

This technique is for extending the Master Requirement Code so that a unique address is provided for each application of the requirement in relation to the item and is authorized only as instructed within the requirement. Responses coded through this technique will always consist of the following: (1) Master Requirement Codes, (2) indicator code (a single numeric character determined by the number of positions contained), (3) identified secondary address code (1 to 3-digit alphabetic codes determined by the number of predicted replies), (4) the mode code, (5) the reply code and/or clear text response, and (6) end with a record separator (*). Steps (1) through (6) are repeated for each application of the requirement.

(c) AND/OR coding:

A technique for extending the Master Requirement Code to provide a distinctive address for multiple responses to the same requirement. Responses coded through this technique will always consist of (1) Master Requirement Code, (2) mode code, (3) the response or reply code (as instructed by the requirement), (4) a single dollar sign ($) for an OR condition, or a double dollar sign ($$) for an AND condition, (5) the mode code, (6) the response or reply code

(followed by conditions (4) through (6) for each of the multiple responses) and (7) end with a record separator (*). NOTE: Apply this technique only when instructed by the requirement sample reply (e.g.).

(3) Mode Code:

A one-position alphabetic code that specifies the manner in which a response will be prepared. Each requirement assigned a MRC is also assigned a mode code. Sample replies follow each FIIG requirement displaying the proper construction of a response for the assigned mode code. The response to a requirement will always be prepared in accordance with the assigned mode code and sample reply except in the following instances:

(a) Use of E Mode Code replies is not authorized. If a reply needed to describe an item is not listed in the applicable table, contact the FIIG Initiator.

(b) Mode Code K may not be used for any requirement unless instructed by the requirement instructions.

(4) Requirement:

This portion includes the characteristics data elements and data use identifiers required to identify and differentiate one item of supply from another, narrative definitions, and explanations as to use and method of expression. Instructions for coding and preparing replies are also provided.

(5) Reply Code:

A code that represents an established authorized reply to a requirement.

d. Section III - Supplementary Technical and Supply Management Data:

This section includes those characteristics requirements necessary to support specific logistics functions other than National Stock Number assignment.

e. Appendix A - Reply Tables:

Tables of authorized replies to requirements and reply codes when the tables are too lengthy for inclusion in Section I/III, when applicable.

f. Appendix B - Reference Drawings:

This appendix contains representative illustrations which portray specific variations of one or more generic characteristics. If reference drawings contain requirements pages to be used in conjunction with illustrations for dimensioning purposes, the requirements pages will contain Master Requirement Codes, mode codes, and a statement of the requirement. A response to requirements on a requirements page is necessary only for those Master Requirement Codes applicable to the illustration selected.

g. Appendix C - Technical Data Tables:

This appendix contains conversion charts and similar data pertinent to the requirements in Section I/III, when applicable.

3. Enter administrative MRC CLQL immediately following the last FIIG requirement reply, as instructed below:

MRC	Mode Code	Requirement	Example
CLQL	G	COLLOQUIAL NAME (common usage name by which an item is known)	CLQLGWOVEN WIRE CLOTH*

4. Special Instructions and Indicator Definitions

a. Measurements:

Unless otherwise indicated within a requirement example, enter all measurements in decimal form, carried to the nearest three decimal places, with a minimum of one digit preceding the decimal. For SI (metric), enter all measurements with a minimum of one digit before and after the decimal. For fraction to decimal conversion, see Appendix C.

b. Indicators:

A cross hatch (#) following an AIN, MRC, Reply Code or Drawing Number indicates for "ALL EXCEPT USA" use only.

5. Indexes

a. Index of Data Requirements

This index is arranged in alphabetic sequence by Master Requirement Code, cross-referenced to the applicable data requirement and page number(s).

b. Index of Approved Item Names

This index is arranged in alphabetic sequence referenced to Applicability Key.

c. Applicability Key Index

This index is arranged in Applicability Key Sequence.

6. Maintenance

Requests for revisions and other changes will be directed to:

[Page Break]

MRC Index

SECTION: A 24
NAME 24
APGF 24
AAXX 24
APHE 25
BGSH 25
ANCY 26
ATJK 26
ACDC 26
ELEC 27
FREQ 27
FAAZ 27
AWJK 28
AKCV 28
ATQL 28
ATQM 29
ARDL 29
CHRQ 29
CHRR 30
CHRS 30
CHRT 31
ATPZ 31
CHRW 31
AKYN 32
SECTION: B 33
NAME 33
APGF 33
CHRX 33
CHRY 34
CHRZ 34
CHSB 34
AMWT 35
CWRZ 35
BYGB 35
ATBH 36
CHSC 36
CHSD 37
NMBR 37
ABHP 38
APHE 38
CHSF 39

AAPN 39
CHSG 39
CHSH 40
CHSJ 40
BXBT 41
CHSK 41
CHSL 41
CHNW 42
CHNX 42
SECTION: C 43
NAME 43
ATBH 43
AJUW 43
SECTION: D 45
NAME 45
CHPB 45
CHPC 45
CHPD 46
CHPF 46
CHPG 47
CHPH 47
CHPJ 48
SECTION: E 49
NAME 49
APGF 49
ASDB 49
ABGB 50
ABNM 50
ABKV 51
BLKD 51
SECTION: F 53
NAME 53
STYL 53
SECTION: G 54
NAME 54
MATL 54
STYL 54
SECTION: H 55
NAME 55
ABHP 55
ABQB 55
APHE 56
AKCV 56
CHPQ 57

AMRN 57
CHPK 57
CHNX 58
SECTION: J 59
NAME 59
CHRX 59
CHRY 59
CHRZ 60
CHPT 60
CHPW 60
CHPX 61
SECTION: K 62
NAME 62
APGF 62
AAXX 62
CHPY 63
APHE 63
BGSH 63
ANCY 64
ATJK 64
ACDC 64
ELEC 65
FREQ 65
FAAZ 65
AWJK 66
AKCV 66
ATQL 66
ATQM 67
BMDG 68
CHRS 68
BNPP 68
BNPQ 69
ACJL 69
CHPZ 69
AKYN 70
SECTION: STANDARD 71
FEAT 71
TEST 71
SPCL 72
ZZZK 72
ZZZT 73
ZZZW 73
ZZZX 74
ZZZY 74

CRTL 74
PRPY 75
ELRN 75
ELCD 75
SECTION: SUPPTECH 76
AFJK 76
SUPP 76
ZZZP 76
ZZZV 76
AGAV 77
CXCY 77

INDEX OF APPROVED ITEM NAMES COVERED BY THIS FIIG

Approved Item Name	INC	App Key
BENDING AND FLARING MACHINE, TUBE	40153	KA

A hand or power operated device which bends or flares tubing. It may perform deburing, cutting or ferruling operations and may include wheels for portability. Device is designed for tube fabrication.

BENDING MACHINE, BAR	05513	KA

A machine for forming bars to desired shapes by means of a rotating head mounted flush with table and fitted with holes for the bending pins.

BENDING MACHINE, PIPE AND CONDUIT	05517	KA

A machine primarily designed for cold bending of conduit, pipe, and heavy wall tubing.

BRAKE MACHINE, SHEET METAL, HAND OPERATED	05510	KB

A hand-operated device which bends sheet metal into a desired shape by the application of pressure upon the stock material held against a selected die.

BRAKE MACHINE, SHEET METAL, POWER OPERATED	13224	KC

A item which bends sheet and/or plate metal into a desired shape by the application of pressure upon the stock metal held against the lower working surface of the item. Excludes PRESS BRAKE, POWER OPERATED.

CAGE ASSEMBLY, ROLLER TUBE EXPANDER	20965	JA

A component of a roller type EXPANDER, TUBE which consists of cage and the required number and types of rolls.

DIE, CABLE REPAIR, MINE SWEEPER	05222	EA

A split die used in a hydraulic press for making a pressed type connection in magnetic mine sweeping cables.

DIE, METAL PUNCHING MACHINE	13009	FA

Approved Item Name	INC	App Key
EXPANDER, TUBE	37288	BA

A tool used on closed sided and/or hollow metal parts to form precise shapes and dimensions by systems of dies which expand outward and stretch the metal to a required shape and size.

FORMING MACHINE, COLLAR, DRILL STEEL	13128	DA

A manually-operated mechanical device, primarily designed to form a collar on one end of a preformed drill steel shank.

FORMING MACHINE, SHEET METAL, ROTARY	05512	AA

A machine furnished with interchangeable rolls designed to perform one or more of the following operations: turning, burring, wiring, elbow edging, collar edging, beading, bending, crimping, seaming, or flanging on sheet metal by passing the material between rolls affixed to spindles.

FORMING MACHINE, SHEET METAL, SLIP ROLL	05511	AB

A machine having three rolls through which sheet metal and/or plate is passed for forming it into cylindrical and curved shapes.

FORMING MACHINE, THREAD ROLLING	66611	DA

A power operated metal forming machine that presses desired shape of threads into the workpiece. Threads are formed on the rotating workpiece by a die set that may be rotary or flat. Formed threads have a work hardened surface. Movement may be automatic, numerical controlled or computer numerical controlled..

MANDREL, ROLLER TUBE EXPANDER	20966	HA

The solid, center, shaft-like component of a roller type EXPANDER, TUBE.

PUNCH, METAL PUNCHING MACHINE	13010	FA
ROLL , ROLLER TUBE EXPANDER	15849	GA

A circular roll of steel either cylindrical or with variable diameters and shape, to insert in the cage of a roller tube expander to shape the expansion or flare of tubes.

ROLL SET, ROLLER TUBE EXPANDER	20967	CA

A quantity of ROLL, ROLLER TUBE EXPANDER of the size and type required for a specified CAGE ASSEMBLY, ROLLER TUBE EXPANDER.

APPLICABILITY KEY INDEX

	AA	AB
NAME	X	X
APGF	X	
AAXX	X	X
APHE	X	X
BGSH	AR	AR
ANCY	AR	AR
ATJK	AR	AR
ACDC	AR	AR
ELEC	AR	AR
FREQ	AR	AR
FAAZ	AR	AR
AWJK	AR	AR
AKCV	AR	AR
ATQL	AR	AR
ATQM	AR	AR
ARDL	AR	AR
CHRQ	AR	
CHRR		X
CHRS		X
CHRT	AR	
ATPZ		X
CHRW		AR
AKYN	AR	AR
FEAT	AR	AR
TEST	AR	AR
SPCL	AR	AR
ZZZK	AR	AR
ZZZT	AR	AR
ZZZW	AR	AR
ZZZX	AR	AR
ZZZY	AR	AR
CRTL	AR	AR
PRPY	AR	AR
ELRN	AR	AR
ELCD	AR	AR
AFJK	AR	AR
SUPP	AR	AR
ZZZP	AR	AR
ZZZV	AR	AR
AGAV	AR	AR
CXCY	AR	AR

	BA
NAME	X
APGF	X
CHRX	X
CHRY	X
CHRZ	AR
CHSB	X
AMWT	AR
CWRZ	X
BYGB	AR
ATBH	X
CHSC	AR
CHSD	X
NMBR	AR
ABHP	AR
APHE	AR
CHSF	AR
AAPN	AR
CHSG	AR
CHSH	AR
CHSJ	AR
BXBT	AR
CHSK	AR
CHSL	AR
CHNW	AR
CHNX	X
FEAT	AR
TEST	AR
SPCL	AR
ZZZK	AR
ZZZT	AR
ZZZW	AR
ZZZX	AR
ZZZY	AR
CRTL	AR
PRPY	AR
ELRN	AR
ELCD	AR
AFJK	AR
SUPP	AR
ZZZP	AR
ZZZV	AR
AGAV	AR
CXCY	AR

	CA
NAME	X
ATBH	X
AJUW	X
BMZB	AR
FEAT	AR
TEST	AR
SPCL	AR
ZZZK	AR
ZZZT	AR
ZZZW	AR
ZZZX	AR
ZZZY	AR
CRTL	AR
PRPY	AR
ELRN	AR
ELCD	AR
AFJK	AR
SUPP	AR
ZZZP	AR
ZZZV	AR
AGAV	AR
CXCY	AR

	DA
NAME	X
CHPB	X
CHPC	AR
CHPD	AR
CHPF	X
CHPG	AR
CHPH	AR
CHPJ	X
FEAT	AR
TEST	AR
SPCL	AR
ZZZK	AR
ZZZT	AR
ZZZW	AR
ZZZX	AR
ZZZY	AR
CRTL	AR
PRPY	AR
ELRN	AR
ELCD	AR
AFJK	AR
SUPP	AR
ZZZP	AR
ZZZV	AR
AGAV	AR
CXCY	AR

	EA
NAME	X
APGF	X
ASDB	AR
ABGB	AR
ABNM	AR
ABKV	AR
BLKD	AR
FEAT	AR
TEST	AR
SPCL	AR
ZZZK	AR
ZZZT	AR
ZZZW	AR
ZZZX	AR
ZZZY	AR
CRTL	AR
PRPY	AR
ELRN	AR
ELCD	AR
AFJK	AR
SUPP	AR
ZZZP	AR
ZZZV	AR
AGAV	AR
CXCY	AR

	FA
NAME	X
STYL	X
AAZE	AR
ABKW	AR
CHPL	AR
CHPM	AR
CHPN	AR
ABUJ	AR
AAZE	AR
ABKW	AR
CHPM	AR
CHPP	AR
FEAT	AR
TEST	AR
SPCL	AR
ZZZK	AR
ZZZT	AR
ZZZW	AR
ZZZX	AR
ZZZY	AR
CRTL	AR
PRPY	AR
ELRN	AR
ELCD	AR
AFJK	AR
SUPP	AR
ZZZP	AR
ZZZV	AR
AGAV	AR
CXCY	AR

	GA
NAME	X
MATL	X
STYL	X
AAHE	AR
ABTZ	AR
AGAH	AR
AMCS	AR
AMDL	AR
AMFM	AR
AMFZ	AR
BPNY	AR
CQBH	AR
BMZB	AR
FEAT	AR
TEST	AR
SPCL	AR
ZZZK	AR
ZZZT	AR
ZZZW	AR
ZZZX	AR
ZZZY	AR
CRTL	AR
PRPY	AR
ELRN	AR
ELCD	AR
AFJK	AR
SUPP	AR
ZZZP	AR
ZZZV	AR
AGAV	AR
CXCY	AR

	HA
NAME	X
ABHP	X
ABQB	X
APHE	X
AKCV	X
CHPQ	AR
AMRN	AR
CHPK	AR
CHNX	X
FEAT	AR
TEST	AR
SPCL	AR
ZZZK	AR
ZZZT	AR
ZZZW	AR
ZZZX	AR
ZZZY	AR
CRTL	AR
PRPY	AR
ELRN	AR
ELCD	AR
AFJK	AR
SUPP	AR
ZZZP	AR
ZZZV	AR
AGAV	AR
CXCY	AR

	JA
NAME	X
CHRX	X
CHRY	X
CHRZ	X
CHPT	X
CHPW	X
CHPX	X
FEAT	AR
TEST	AR
SPCL	AR
ZZZK	AR
ZZZT	AR
ZZZW	AR
ZZZX	AR
ZZZY	AR
CRTL	AR
PRPY	AR
ELRN	AR
ELCD	AR
AFJK	AR
SUPP	AR
ZZZP	AR
ZZZV	AR
AGAV	AR
CXCY	AR

	KA	KB	KC
NAME	X	X	X
APGF	X	X	X
AAXX	AR	X	X
CHPY	AR	X	X
APHE	X		
BGSH	AR		X
ANCY	AR		AR
ATJK	AR		AR
ACDC	AR		AR
ELEC	AR		AR
FREQ	AR		AR
FAAZ	AR		AR
AWJK	AR		AR
AKCV	AR		AR
ATQL	AR		AR
ATQM	AR		AR
BMDG	X		
CHRS		AR	AR
BNPP		AR	AR
BNPQ		AR	AR
ACJL	AR	X	AR
CHPZ	AR		
AKYN	AR	AR	AR
FEAT	AR	AR	AR
TEST	AR	AR	AR
SPCL	AR	AR	AR
ZZZK	AR	AR	AR
ZZZT	AR	AR	AR
ZZZW	AR	AR	AR
ZZZX	AR	AR	AR
ZZZY	AR	AR	AR
CRTL	AR	AR	AR
PRPY	AR	AR	AR
ELRN	AR	AR	AR
ELCD	AR	AR	AR
AFJK	AR	AR	AR
SUPP	AR	AR	AR
ZZZP	AR	AR	AR
ZZZV	AR	AR	AR
AGAV	AR	AR	AR
CXCY	AR	AR	AR

[Page Break]

Body

SECTION: A

APP Key	MRC	Mode Code	Requirements
ALL			
	NAME	D	ITEM NAME

Definition: A NOUN, WITH OR WITHOUT MODIFIERS, BY WHICH AN ITEM OF SUPPLY IS KNOWN.

Reply Instructions: Enter the applicable Item Name Code from the index appearing in the General Information Section. (e.g., NAMED05512*)

AA

APGF D DESIGN TYPE

Definition: INDICATES THE DESIGN TYPE OF THE ITEM.

Reply Instructions: Enter the applicable Reply Code from the table below. (e.g., APGFDAES*; APGFDERF$$DERG*; APGFDAES$DERE*)

REPLY CODE	REPLY (AK54)
A	ANY ACCEPTABLE
AES	BEADING
ERE	BURRING
BKX	COMBINATION
ERF	CRIMPING
ERG	DOUBLE SEAMING
ERH	ELBOW EDGING
ERJ	SETTING DOWN

ALL

AAXX D MOUNTING TYPE

Definition: INDICATES THE TYPE OF MOUNT UTILIZED TO SUPPORT THE ITEM.

Reply Instructions: Enter the applicable Reply Code from the table below. (e.g., AAXXDBT*; AAXXDBM$DBY*)

APP Key	MRC	Mode Code	Requirements

REPLY CODE	REPLY (AA78)
BT	BENCH
CA	FLOOR
BM	PEDESTAL
EE	PORTABLE
BY	TABLE
AU	WHEEL

ALL

APHE D OPERATION METHOD

Definition: THE MEANS USED TO OPERATE THE ITEM.

Reply Instructions: Enter the applicable Reply Code from the table below. (e.g., APHEDAAAP*; APHEDAAAP$DAABG*)

REPLY CODE	REPLY (AC58)
AAAP	HAND
AABG	POWER

NOTE FOR MRCS BGSH AND ARDL: IF REPLY CODE AABG IS ENTERED FOR MRC APHE, REPLY TO MRC BGSH. FOR APPLICABILITY KEY AA, IF REPLY CODE AAAP IS ENTERED FOR MRC APHE, REPLY TO MRC ARDL.

ALL* (See Note Above)

BGSH D POWER UNIT

Definition: AN INDICATION OF WHETHER OR NOT A POWER UNIT IS INCLUDED.

Reply Instructions: Enter the applicable Reply Code from the table below. (e.g., BGSHDB*; BGSHDB$DC*)

REPLY CODE	REPLY (AA49)
B	INCLUDED
C	NOT INCLUDED

NOTE FOR MRCS ANCY, ATJK, AWJK, AND AKCV: IF REPLY CODE B IS ENTERED FOR MRC BGSH, REPLY TO MRCS ANCY AND ATJK. IF REPLY CODE C IS ENTERED FOR MRC BGSH, REPLY TO MRCS AWJK AND AKCV.

APP Key	MRC	Mode Code	Requirements

ALL* (See Note Above)

ANCY B HORSEPOWER RATING

Definition: AN INDICATION OF THE RATED HORSEPOWER OF THE ITEM.

Reply Instructions: Enter the numeric value. (e.g., ANCYB1.250*)

ALL* (See Note Preceding MRC ANCY)

ATJK D POWER SOURCE

Definition: THE SOURCE OF POWER WHICH DRIVES THE ITEM.

Reply Instructions: Enter the applicable Reply Code from the table below. (e.g., ATJKDAD*; ATJKDAD$DAE*)

REPLY CODE	REPLY (AG27)
AD	ELECTRIC MOTOR
AE	GASOLINE ENGINE

NOTE FOR MRC ACDC: IF REPLY CODE AD IS ENTERED FOR MRC ATJK, REPLY TO MRC ACDC.

ALL* (See Note Above)

ACDC D CURRENT TYPE

Definition: INDICATES THE TYPE OF CURRENT WHETHER ALTERNATING, DIRECT, OR BOTH.

Reply Instructions: Enter the applicable Reply Code from the table below. (e.g., ACDCDD*; ACDCDB$DC*)

REPLY CODE	REPLY (AB62)
B	AC
D	AC/DC
C	DC

NOTE FOR MRCS ELEC, FREQ, AND FAAZ: IF REPLY CODE B OR D IS ENTERED FOR MRC ACDC, REPLY TO MRCS ELEC, FREQ, AND FAAZ. IF REPLY CODE C IS ENTERED FOR MRC ACDC, REPLY TO MRC ELEC.

APP Key	MRC	Mode Code	Requirements

ALL* (See Note Above)

ELEC B VOLTAGE IN VOLTS

Definition: THE TOTAL ELECTRICAL VOLTAGE.

Reply Instructions: Enter the input voltage numeric value. If multiple voltages are for the same type of current, use AND coding ($$) entering in ascending sequence. If multiple voltages represent AC and DC currents, enter the AC voltage(s) first. (e.g., ELECB12.0*; ELECB110.0$$B440.0*; ELECB110.0$B24.0*)

For items not rated, change the Mode Code to K and enter Reply Code N. (e.g., ELECKN*)

ALL* (See Note Preceding MRC ELEC)

FREQ B FREQUENCY IN HERTZ

Definition: THE CYCLES PER SECOND (HERTZ) OF THE ALTERNATING CURRENT.

Reply Instructions: Enter the numeric value. (e.g., FREQB50.0*; FREQB50.0$B400.0*)

For items not rated, change the Mode Code to K and enter Reply Code N. (e.g., FREQKN*)

ALL* (See Note Preceding MRC ELEC)

FAAZ D PHASE

Definition: THE NUMBER OF ALTERNATING CURRENT PHASES.

Reply Instructions: Enter the applicable Reply Code from the table below. (e.g., FAAZDA*; FAAZDB$DC*)

REPLY CODE	REPLY (AD02)
A	SINGLE
E	SINGLE/THREE
C	THREE
B	TWO

ALL* (See Note Precding MRC ANCY)

APP Key	MRC	Mode Code	Requirements
	AWJK	B	HORSEPOWER REQUIRED

Definition: THE HORSEPOWER REQUIRED TO OPERATE THE ITEM.

Reply Instructions: Enter the numeric value. (e.g., AWJKB1.250*)

ALL* (See Note Preceding MRC ANCY)

AKCV	D	DRIVE TYPE

Definition: INDICATES THE TYPE OF DRIVE FOR TURNING, ROTATING, OR POSITIONING THE MECHANISM.

Reply Instructions: Enter the applicable Reply Code from the table below. (e.g., AKCVDAG*; AKCVDAC$DAG*)

REPLY CODE	REPLY (AG25)
A	ANY ACCEPTABLE
AC	DIRECT
AG	GEAR
BW	PULLEY

NOTE FOR MRCS ATQL AND ATQM: IF REPLY CODE BW IS ENTERED FOR MRC AKCV, REPLY TO MRCS ATQL AND ATQM.

ALL* (See Note Above)

ATQL	J	PULLEY DIAMETER

Definition: THE LENGTH OF A STRAIGHT LINE WHICH PASSES THROUGH THE CENTER OF THE PULLEY, AND TERMINATES AT THE CIRCUMFERENCE.

Reply Instructions: Enter the applicable Reply Codes from Tables 1 and 2 below, followed by the numeric value. (e.g., ATQLJAA8.000*; ATQLTLA25.4*; ATQLJAB7.000$$JAC9.000*)

Table 1

REPLY CODE	REPLY (AA05)
A	INCHES
L	MILLIMETERS

Table 2

REPLY CODE	REPLY (AC20)

APP Key	MRC	Mode Code	Requirements
		A	NOMINAL
		B	MINIMUM
		C	MAXIMUM

ALL* (See Note Preceding MRC ATQL)

ATQM J PULLEY FACE WIDTH

Definition: A MEASUREMENT TAKEN AT RIGHT ANGLES TO THE LENGTH OF THE PULLEY FACE, IN DISTINCTION FROM THICKNESS.

Reply Instructions: Enter the applicable Reply Codes from Tables 1 and 2 below, followed by the numeric value. (e.g., ATQMJAA2.000*; ATQMJLA25.4*; ATQMJAB1.000$$JAC3.000*)

Table 1

REPLY CODE	REPLY (AA05)
A	INCHES
L	MILLIMETERS

Table 2

REPLY CODE	REPLY (AC20)
A	NOMINAL
B	MINIMUM
C	MAXIMUM

ALL* (See Note Preceding MRC BGSH)

ARDL D MECHANICAL DRIVE TYPE

Definition: INDICATES THE TYPE OF MECHANICAL DRIVE.

Reply Instructions: Enter the applicable Reply Code from the table below. (e.g., ARDLDAC*; ARDLDAC$DAG*)

REPLY CODE	REPLY (AG25)
AC	DIRECT
AG	GEAR

AA*

CHRQ J THROAT DEPTH TO GAGE

APP Key	MRC	Mode Code	Requirements

Definition: A MEASUREMENT OF THE DEPTH OF THE THROAT TO GAGE.

Reply Instructions: Enter the applicable Reply Code from the table below, followed by the numeric value. (e.g., CHRQJA12.750*; CHRQJL50.8*)

REPLY CODE	REPLY (AA05)
A	INCHES
L	MILLIMETERS

AB

CHRR G METAL THICKNESS ACCOMMODATED

Definition: A MEASUREMENT OF THE SMALLEST DIMENSION OF THE METAL THE ITEM WILL ACCOMMODATE, IN DISTINCTION FROM LENGTH OR WIDTH.

Reply Instructions: Enter the reply in clear text. (e.g., CHRRG16 GAGE*; CHRRG0.500 IN.*)

AB

CHRS J WORKING WIDTH

Definition: A MEASUREMENT OF THE WORKING WIDTH OF THE ITEM.

Reply Instructions: Enter the applicable Reply Codes from Tables 1 and 2 below, followed by the numeric value. (e.g., CHRSJAA42.000*; CHRSJLA100.7*; CHRSJAB41.000$$JAC43.000*)

Table 1

REPLY CODE	REPLY (AA05)
A	INCHES
L	MILLIMETERS

Table 2

REPLY CODE	REPLY (AC20)
A	NOMINAL
B	MINIMUM
C	MAXIMUM

AA*

APP Key	MRC	Mode Code	Requirements
	CHRT	G	ROLL QUANTITY/TYPE/SIZE/CAPACITY

Definition: AN INDICATION OF THE NUMBER, TYPE, SIZE, OR CAPACITY OF A ROLL.

Reply Instructions: Enter the reply in clear text. (e.g., CHRTG1 SET, THIN TURNING, 11 GAGE WIRE CAPACITY*)

AB

ATPZ	J	ROLL DIAMETER

Definition: THE LENGTH OF A STRAIGHT LINE WHICH PASSES THROUGH THE CENTER OF THE ROLL, AND TERMINATES AT THE CIRCUMFERENCE.

Reply Instructions: Enter the applicable Reply Codes from Tables 1 and 2 below, followed by the numeric value. (e.g., ATPZJAA4.000*; ATPZJLA75.2*; ATPZJAB3.000$$JAC5.000*)

Table 1

REPLY CODE	REPLY (AA05)
A	INCHES
L	MILLIMETERS

Table 2

REPLY CODE	REPLY (AC20)
A	NOMINAL
B	MINIMUM
C	MAXIMUM

AB*

CHRW	D	ROLL ADJUSTMENT METHOD

Definition: THE MEANS USED FOR ADJUSTING THE ROLL(S).

Reply Instructions: Enter the applicable Reply Code from the table below. (e.g., CHRWDAAL*; CHRWDAAL$DAFB*)

REPLY CODE	REPLY (AL41)
AAL	HAND
AFB	POWER

APP Key	MRC	Mode Code	Requirements
ALL*			
	AKYN	G	FURNISHED ITEMS AND QUANTITY

Definition: THE NAME AND NUMBER OF THOSE PARTS FURNISHED WITH THE ITEM OF SUPPLY THAT HAVE NOT BEEN SPECIFIED ELSEWHERE.

Reply Instructions: Enter the reply in clear text. (e.g., AKYNGWRENCH, 1*)

SECTION: B

APP Key	MRC	Mode Code	Requirements
ALL			
	NAME	D	ITEM NAME

Definition: A NOUN, WITH OR WITHOUT MODIFIERS, BY WHICH AN ITEM OF SUPPLY IS KNOWN.

Reply Instructions: Enter the applicable Item Name Code from the index appearing in the General Information Section. (e.g., NAMED07478*)

ALL

APGF	D	DESIGN TYPE

Definition: INDICATES THE DESIGN TYPE OF THE ITEM.

Reply Instructions: Enter the applicable Reply Code from the table below. (e.g., APGFDAMT*; APGFDAMT$DERK*)

REPLY CODE	REPLY (AK54)
AMT	ADJUSTABLE
ERK	ARCH
ERL	LONG REACH
AHL	PLAIN
ERM	REVERSE

ALL

CHRX	J	TUBE MINIMUM INSIDE DIAMETER ACCOMMODATED

Definition: THE SMALLEST MEASUREMENT OF A STRAIGHT LINE WHICH PASSES THROUGH THE CENTER OF A TUBE THE ITEM IS DESIGNED TO ACCOMMODATE, AND TERMINATES AT THE INSIDE CIRCUMFERENCE.

Reply Instructions: Enter the applicable Reply Code from the table below, followed by the numeric value. (e.g., CHRXJA1.500*; CHRXJL25.4*)

REPLY CODE	REPLY (AA05)
A	INCHES
L	MILLIMETERS

APP Key	MRC	Mode Code	Requirements
ALL			
	CHRY	J	RATED EXPANSION DIAMETER

Definition: THE LENGTH OF A STRAIGHT LINE WHICH PASSES THROUGH THE CENTER OF THE EXPANSION FOR WHICH THE ITEM IS RATED, AND TERMINATES AT THE CIRCUMFERENCE.

Reply Instructions: Enter the applicable Reply Code from the table below, followed by the numeric value. (e.g., CHRYJA2.125*; CHRYJL50.8*)

For items not rated, change the Mode Code to K and enter Reply Code N. (e.g., CHRYKN*)

REPLY CODE	REPLY (AA05)
A	INCHES
L	MILLIMETERS

ALL*

	CHRZ	J	TUBE SHEET MAXIMUM THICKNESS

Definition: A MAXIMUM MEASUREMENT OF THE SMALLEST DIMENSION OF THE TUBE SHEET, IN DISTINCTION FROM LENGTH OR WIDTH.

Reply Instructions: Enter the applicable Reply Code from the table below, followed by the numeric value. (e.g., CHRZJA0.750*; CHRZJL21.7*)

REPLY CODE	REPLY (AA05)
A	INCHES
L	MILLIMETERS

ALL

	CHSB	D	GUARD RING

Definition: AN INDICATION OF WHETHER OR NOT A GUARD RING IS INCLUDED.

Reply Instructions: Enter the applicable Reply Code from the table below. (e.g., CHSBDB*; CHSBDB$DC*)

APP Key	MRC	Mode Code	Requirements

REPLY CODE	REPLY (AA49)
B	INCLUDED
C	NOT INCLUDED

NOTE FOR MRC AMWT: IF REPLY CODE B IS ENTERED FOR MRC CHSB, REPLY TO MRC AMWT.

ALL* (See Note Above)

AMWT D REVERSIBILITY

Definition: AN INDICATION OF WHETHER OR NOT AN ITEM IS REVERSIBLE.

Reply Instructions: Enter the applicable Reply Code from the table below. (e.g., AMWTDC*; AMWTDB$DC*)

REPLY CODE	REPLY (AF62)
B	NONREVERSIBLE
C	REVERSIBLE

ALL

CWRZ D EXPANDER TYPE

Definition: INDICATES THE TYPE OF EXPANDER.

Reply Instructions: Enter the applicable Reply Code from the table below. (e.g., CWRZDAEK*; CWRZDANR$DAEK*)

REPLY CODE	REPLY (AJ57)
AEK	ROLLER
ANR	SECTIONAL

NOTE FOR MRCS BYGB, ATBH, AND CHSC: IF REPLY CODE AEK IS ENTERED FOR MRC CWRZ, REPLY TO MRCS BYGB, ATBH, AND CHSC.

ALL* (See Note Above)

BYGB D ROLLER TYPE

Definition: INDICATES THE TYPE OF ROLLER(S) PROVIDED.

APP Key	MRC	Mode Code	Requirements

Reply Instructions: Enter the applicable Reply Code from the table below. (e.g., BYGBDERN*; BYGBDAMN$DBZW*)

REPLY CODE	REPLY (AK54)
FGG	FLARING
ERN	PRESSER
AMN	STRAIGHT
BZW	TAPERED

ATBH A ROLLER QUANTITY

Definition: THE NUMBER OF ROLLERS PROVIDED.

Reply Instructions: Enter the quantity. Enter multiple replies in the same sequence as MRC BYGB. (e.g., ATBHA3*; ATBHA3$A2*)

REPLY CODE	REPLY (0295)
1K	FIFTH STYLE GROUP
1F	FIRST STYLE GROUP
1J	FOURTH STYLE GROUP
1G	SECOND STYLE GROUP
1L	SINGLE STYLE GROUP
1H	THIRD STYLE GROUP

ALL* (See Note Preceding MRC BYGB)

CHSC J ROLLER EFFECTIVE LENGTH

Definition: A MEASUREMENT OF THE LONGEST EFFECTIVE DIMENSION OF THE ROLLER, IN DISTINCTION FROM WIDTH.

Reply Instructions: Enter the applicable Reply Codes from Tables 1 and 2 below, followed by the numeric value. (e.g., CHSCJAA1.500; CHSCJLA32.4*; CHSCJAB1.500$$JAC1.750*)*

Table 1

APP Key	MRC	Mode Code	Requirements

REPLY CODE	REPLY (AA05)
A	INCHES
L	MILLIMETERS

Table 2

REPLY CODE	REPLY (AC20)
A	NOMINAL
B	MINIMUM
C	MAXIMUM

ALL

CHSD D MANDREL TYPE

Definition: INDICATES THE TYPE OF MANDREL.

Reply Instructions: Enter the applicable Reply Code from the table below. (e.g., CHSDDAGH*; CHSDDAGH$$DAGK*; CHSDDAGH$DAGJ*)

REPLY CODE	REPLY (AK84)
AGH	JOINTED MORSE TAPER HEAD
AGJ	JOINTED ROUND HEAD
AGK	ONE PIECE MORSE TAPER HEAD
AGL	ONE PIECE ROUND HEAD
AGM	ONE PIECE SQUARE HEAD

NOTE FOR MRCS NMBR, ABHP, APHE, CHSF, AAPN, CHSG, CHSH, CHSJ, BXBT, CHSK, CHSL, AND CHNW: IF REPLY CODE AGH IS ENTERED FOR MRC CHSD, REPLY TO MRCS NMBR, ABHP, APHE, CHSF, AAPN, CHSG, APPLICABLE MRCS CHSH, CHSJ AND/OR BXBT, AND TO MRC CHSK. IF REPLY CODE AGL IS ENTERED FOR MRC CHSD, REPLY TO MRCS NMBR, ABHP, APHE, CHSF, AAPN, CHSG, AND TO APPLICABLE MRCS CHSH, CHSJ AND/OR BXBT. IF REPLY CODE AGJ IS ENTERED FOR MRC CHSD, REPLY TO MRCS NMBR, ABHP, APHE, CHSF, AND BXBT. IF REPLY CODE AGM IS ENTERED FOR MRC CHSD, REPLY TO MRCS NMBR, ABHP, APHE, CHSF, BXBT, CHSL, AND CHNW. IF REPLY CODE AGK IS ENTERED FOR MRC CHSD, REPLY TO MRCS NMBR, ABHP, APHE, CHSF, BXBT, AND CHSK.

ALL* (See Note Above)

NMBR A QUANTITY

APP Key	MRC	Mode Code	Requirements

Definition: A NUMERIC VALUE WHICH REPRESENTS A POSITIVE WHOLE VALUE WITHOUT REGARD TO ANY UNIT OF MEASURE.

Reply Instructions: Enter the quantity. (e.g., NMBRA1*; NMBRA1$$A2*; NMBRA1$A2*)

ALL* (See Note Preceding MRC NMBR)

ABHP J OVERALL LENGTH

Definition: THE DIMENSION MEASURED ALONG THE LONGITUDINAL AXIS WITH TERMINATED POINTS AT THE EXTREME ENDS OF THE ITEM.

Reply Instructions: Enter the applicable Reply Codes from Tables 1 and 2 below, followed by the numeric value. (e.g., ABHPJAA26.000*; ABHPJLA25.4*; ABHPJAB25.000$$JAC27.000*)

Table 1

REPLY CODE	REPLY (AA05)
A	INCHES
L	MILLIMETERS

Table 2

REPLY CODE	REPLY (AC20)
A	NOMINAL
B	MINIMUM
C	MAXIMUM

ALL* (See Note Preceding MRC NMBR)

APHE D OPERATION METHOD

Definition: THE MEANS USED TO OPERATE THE ITEM.

Reply Instructions: Enter the applicable Reply Code from the table below. (e.g., APHEDAAAP*; APHEDAAAP$DAABG*)

REPLY CODE	REPLY (AC58)
AAAP	HAND
AABG	POWER

ALL* (See Note Preceding MRC NMBR)

APP Key	MRC	Mode Code	Requirements
	CHSF	D	FLEXIBLE TIP

Definition: AN INDICATION OF WHETHER OR NOT A FLEXIBLE TIP IS INCLUDED.

Reply Instructions: Enter the applicable Reply Code from the table below. (e.g., CHSFDB*; CHSFDB$DC*)

REPLY CODE	REPLY (AA49)
B	INCLUDED
C	NOT INCLUDED

ALL* (See Note Preceding MRC NMBR)

AAPN	A	SECTION QUANTITY

Definition: THE NUMBER OF INDIVIDUAL ELEMENTS.

Reply Instructions: Enter the quantity. (e.g., AAPNA3*; AAPNA3$A4*)

ALL* (See Note Preceding MRC NMBR)

CHSG	J	HEAD SECTION LENGTH

Definition: A MEASUREMENT OF THE LONGEST DIMENSION OF THE HEAD SECTION, IN DISTINCTION FROM WIDTH.

Reply Instructions: Enter the applicable Reply Codes from Tables 1 and 2 below, followed by the numeric value. (e.g., CHSGJAA14.500*; CHSGJLA25.4*; CHSGJAB14.000$$JAC15.000*)

Table 1

REPLY CODE	REPLY (AA05)
A	INCHES
L	MILLIMETERS

Table 2

REPLY CODE	REPLY (AC20)
A	NOMINAL
B	MINIMUM
C	MAXIMUM

ALL* (See Note Preceding MRC NMBR)

APP Key	MRC	Mode Code	Requirements
	CHSH	J	SECOND STRAIGHT SECTION LENGTH

Definition: A MEASUREMENT OF THE LONGEST DIMENSION OF THE SECOND STRAIGHT SECTION, IN DISTINCTION FROM WIDTH.

Reply Instructions: Enter the applicable Reply Codes from Tables 1 and 2 below, followed by the numeric value. (e.g., CHSHJAA6.000*; CHSHJLA25.4*; CHSHJAB5.000$$JAC7.000*)

Table 1

REPLY CODE	REPLY (AA05)
A	INCHES
L	MILLIMETERS

Table 2

REPLY CODE	REPLY (AC20)
A	NOMINAL
B	MINIMUM
C	MAXIMUM

ALL* (See Note Preceding MRC NMBR)

	CHSJ	J	THIRD STRAIGHT SECTION LENGTH

Definition: A MEASUREMENT OF THE LONGEST DIMENSION OF THE THIRD STRAIGHT SECTION, IN DISTINCTION FROM WIDTH.

Reply Instructions: Enter the applicable Reply Codes from Tables 1 and 2 below, followed by the numeric value. (e.g., CHSJJAA8.000*; CHSJJLA25.4*; CHSJJAB7.000$$JAC9.000*)

Table 1

REPLY CODE	REPLY (AA05)
A	INCHES
L	MILLIMETERS

Table 2

REPLY CODE	REPLY (AC20)
A	NOMINAL
B	MINIMUM
C	MAXIMUM

ALL* (See Note Preceding MRC NMBR)

APP Key	MRC	Mode Code	Requirements
	BXBT	J	TAPERED PORTION LENGTH

Definition: A MEASUREMENT OF THE LONGEST DIMENSION OF THE TAPERED PORTION, IN DISTINCTION FROM WIDTH.

Reply Instructions: Enter the applicable Reply Codes from Tables 1 and 2 below, followed by the numeric value. (e.g., BXBTJAA8.667*; BXBTJLA25.4*; BXBTJAB8.567$$JAC8.767*)

Table 1

REPLY CODE	REPLY (AA05)
A	INCHES
L	MILLIMETERS

Table 2

REPLY CODE	REPLY (AC20)
A	NOMINAL
B	MINIMUM
C	MAXIMUM

ALL* (See Note Preceding MRC NMBR)

CHSK	A	MORSE TAPER HEAD SIZE NUMBER

Definition: AN INDICATION OF THE MORSE TAPER HEAD SIZE NUMBER.

Reply Instructions: Enter the number. (e.g., CHSKA3*)

ALL* (See Note Preceding MRC NMBR)

CHSL	J	SQUARE HEAD WIDTH ACROSS FLATS

Definition: THE DISTANCE FROM ONE FLAT TO THE OPPOSITE FLAT OF THE SQUARE HEAD.

Reply Instructions: Enter the applicable Reply Codes from Tables 1 and 2 below, followed by the numeric value for only one side of the square. (e.g., CHSLJAA1.750*; CHSLJLA25.4*; CHSLJAB1.550$$JAC1.950*)

Table 1

REPLY CODE	REPLY (AA05)
A	INCHES
L	MILLIMETERS

APP Key	MRC	Mode Code	Requirements

Table 2

REPLY CODE	REPLY (AC20)
A	NOMINAL
B	MINIMUM
C	MAXIMUM

ALL* (See Note Preceding MRC NMBR)

CHNW J HEAD SQUARE LENGTH

Definition: A MEASUREMENT OF THE LONGEST DIMENSION OF THE SQUARE PORTION OF THE HEAD, IN DISTINCTION FROM WIDTH.

Reply Instructions: Enter the applicable Reply Codes from Tables 1 and 2 below, followed by the numeric value. (e.g., CHNWJAA2.000*; CHNWJLA25.4*; CHNWJJAB1.000$$JAC3.000*)

Table 1

REPLY CODE	REPLY (AA05)
A	INCHES
L	MILLIMETERS

Table 2

REPLY CODE	REPLY (AC20)
A	NOMINAL
B	MINIMUM
C	MAXIMUM

ALL

CHNX D HAND TURNING ROD

Definition: AN INDICATION OF WHETHER OR NOT A HAND TURNING ROD IS INCLUDED.

Reply Instructions: Enter the applicable Reply Code from the table below. (e.g., CHNXDC*; CHNXDB$DC*)

REPLY CODE	REPLY (AA49)
B	INCLUDED
C	NOT INCLUDED

SECTION: C

APP Key	MRC	Mode Code	Requirements
ALL			
	NAME	D	ITEM NAME

Definition: A NOUN, WITH OR WITHOUT MODIFIERS, BY WHICH AN ITEM OF SUPPLY IS KNOWN.

Reply Instructions: Enter the applicable Item Name Code from the index appearing in the General Information Section. (e.g., NAMED20967*)

ALL

ATBH	A	ROLLER QUANTITY

Definition: THE NUMBER OF ROLLERS PROVIDED.

Reply Instructions: Enter the I/SAC group designator from Table 1 below followed by the Mode Code and the quantity for each type of roller. (e.g., ATBH1FA4; ATBH1BA2*; ATBH1AA2$A3*)*

REPLY CODE	REPLY (0295)
1K	FIFTH STYLE GROUP
1F	FIRST STYLE GROUP
1J	FOURTH STYLE GROUP
1G	SECOND STYLE GROUP
1L	SINGLE STYLE GROUP
1H	THIRD STYLE GROUP

ALL

AJUW	L	ROLLER STYLE

Definition: THE STYLE DESIGNATION INDICATING THE CONFIGURATION THAT MOST NEARLY CORRESPONDS TO THE APPEARANCE OF THE ROLLER.

Reply Instructions: Enter the applicable I/SAC group designator from Table 1 below followed by the Mode Code and style number from Appendix B , Reference Drawing Group A. (e.g., AJUW1FLA1; AJUW1ALA1$LA3*)*

REPLY CODE	REPLY (0295)

APP Key	MRC	Mode Code	Requirements
		1K	FIFTH STYLE GROUP
		1F	FIRST STYLE GROUP
		1J	FOURTH STYLE GROUP
		1G	SECOND STYLE GROUP
		1L	SINGLE STYLE GROUP
		1H	THIRD STYLE GROUP

SECTION: D

APP Key	MRC	Mode Code	Requirements
ALL			
	NAME	D	ITEM NAME

Definition: A NOUN, WITH OR WITHOUT MODIFIERS, BY WHICH AN ITEM OF SUPPLY IS KNOWN.

Reply Instructions: Enter the applicable Item Name Code from the index appearing in the General Information Section. (e.g., NAMED13128*)

ALL

CHPB	D	DRILL STEEL SHAPE FOR WHICH SPLIT DIE IS DESIGNED

Definition: THE PHYSICAL CONFIGURATION OF THE DRILL STEEL FOR WHICH THE SPLIT DIE IS DESIGNED.

Reply Instructions: Enter the applicable Reply Code from the table below. (e.g., CHPBDAHH*; CHPBDAHH$DAPL*)

REPLY CODE	REPLY (AD07)
AHH	HEXAGON
APL	ROUND
ASL	SQUARE

NOTE FOR MRCS CHPC AND CHPD: IF REPLY CODE AHH OR ASL IS ENTERED FOR MRC CHPB, REPLY TO MRC CHPC. IF REPLY CODE APL IS ENTERED FOR MRC CHPB, REPLY TO MRC CHPD.

ALL* (See Note Above)

CHPC	J	DRILL STEEL WIDTH ACROSS FLATS

Definition: A MEASUREMENT OF THE DRILL STEEL DISTANCE FROM ONE FLAT TO THE OPPOSITE FLAT, IN DISTINCTION FROM HEIGHT.

Reply Instructions: Enter the applicable Reply Codes from Tables 1 and 2 below, followed by the numeric value. (e.g., CHPCJAA1.500*; CHPCJLA25.4*; CHPCJAB1.000$$JAC2.000*)

Table 1

REPLY CODE	REPLY (AA05)
A	INCHES

APP Key	MRC	Mode Code	Requirements
		L	MILLIMETERS

Table 2

REPLY CODE	REPLY (AC20)
A	NOMINAL
B	MINIMUM
C	MAXIMUM

ALL* (See Note Preceding MRC CHPC)

CHPD	J	DRILL STEEL DIAMETER

Definition: THE LENGTH OF A STRAIGHT LINE WHICH PASSES THROUGH THE CENTER OF THE CIRCULAR DRILL STEEL, AND TERMINATES AT THE CIRCUMFERENCE.

Reply Instructions: Enter the applicable Reply Codes from Tables 1 and 2 below, followed by the numeric value. (e.g., CHPDJAA1.500*; CHPDJLA25.4*; CHPDJAB1.000$$JAC2.000*)

Table 1

REPLY CODE	REPLY (AA05)
A	INCHES
L	MILLIMETERS

Table 2

REPLY CODE	REPLY (AC20)
A	NOMINAL
B	MINIMUM
C	MAXIMUM

ALL

CHPF	D	DRILL STEEL SHAPE FOR WHICH MOVABLE DIE IS DESIGNED

Definition: THE PHYSICAL CONFIGURATION OF THE DRILL STEEL FOR WHICH THE MOVABLE DIE IS DESIGNED.

Reply Instructions: Enter the applicable Reply Code from the table below. (e.g., CHPFDAHH*; CHPFDAHH$DAPL*)

REPLY CODE	REPLY (AD07)

APP Key	MRC	Mode Code	Requirements
		AHH	HEXAGON
		APL	ROUND
		ASL	SQUARE

NOTE FOR MRCS CHPG AND CHPH: IF REPLY CODE AHH OR ASL IS ENTERED FOR MRC CHPF, REPLY TO MRC CHPG. IF REPLY CODE APL IS ENTERED FOR MRC CHPF, REPLY TO MRC CHPH.

ALL* (See Note Above)

CHPG J DRILL STEEL SHANK WIDTH ACROSS FLATS

Definition: A MEASUREMENT OF THE DRILL STEEL SHANK DISTANCE FROM ONE FLAT TO THE OPPOSITE FLAT, IN DISTINCTION FROM HEIGHT.

Reply Instructions: Enter the applicable Reply Codes from Tables 1 and 2 below, followed by the numeric value. (e.g., CHPGJAA1.000*; CHPGJLA25.4*; CHPGJAB0.900$$JAC1.100*)

Table 1

REPLY CODE	REPLY (AA05)
A	INCHES
L	MILLIMETERS

Table 2

REPLY CODE	REPLY (AC20)
A	NOMINAL
B	MINIMUM
C	MAXIMUM

ALL* (See Note Preceding MRC CHPG)

CHPH J DRILL STEEL SHANK DIAMETER

Definition: THE LENGTH OF A STRAIGHT LINE WHICH PASSES THROUGH THE CENTER OF A CIRCULAR DRILL STEEL SHANK, AND TERMINATES AT THE CIRCUMFERENCE.

Reply Instructions: Enter the applicable Reply Codes from Tables 1 and 2 below, followed by the numeric value. (e.g., CHPHJAA1.250*; CHPHJLA25.4*; CHPHJAB1.000$$JAC1.500*)

Table 1

APP Key	MRC	Mode Code	Requirements

REPLY CODE	REPLY (AA05)
A	INCHES
L	MILLIMETERS

Table 2

REPLY CODE	REPLY (AC20)
A	NOMINAL
B	MINIMUM
C	MAXIMUM

ALL

CHPJ J MOVABLE DIE DRILL STEEL SHANK END LENGTH ACCOMMODATED

Definition: A MEASUREMENT OF THE LONGEST DIMENSION OF A DRILL STEEL SHANK END ACCOMMODATED BY THE MOVABLE DIE.

Reply Instructions: Enter the applicable Reply Codes from Tables 1 and 2 below, followed by the numeric value. (e.g., CHPJJAA4.125*; CHPJJLA25.4*; CHPJJAB4.000$$JAC4.250*)

Table 1

REPLY CODE	REPLY (AA05)
A	INCHES
L	MILLIMETERS

Table 2

REPLY CODE	REPLY (AC20)
A	NOMINAL
B	MINIMUM
C	MAXIMUM

SECTION: E

APP Key	MRC	Mode Code	Requirements
ALL			
	NAME	D	ITEM NAME

Definition: A NOUN, WITH OR WITHOUT MODIFIERS, BY WHICH AN ITEM OF SUPPLY IS KNOWN.

Reply Instructions: Enter the applicable Item Name Code from the index appearing in the General Information Section. (e.g., NAMED05222*)

ALL

APGF	D	DESIGN TYPE

Definition: INDICATES THE DESIGN TYPE OF THE ITEM.

Reply Instructions: Enter the applicable Reply Code from the table below. (e.g., APGFDERS*; APGFDERS$DERT*)

REPLY CODE	REPLY (AK54)
ERS	SPLIT POLYGON
ERT	SPLIT ROUND

NOTE FOR MRCS ASBD, ABGB, ABNM, ABKV, AND BLKD: IF REPLY CODE ERS IS ENTERED FOR MRC APGF, REPLY TO MRCS ASDB, ABGB, AND ABNM. IF REPLY CODE ERT IS ENTERED FOR MRC APGF, REPLY TO MRCS ABNM, ABKV, AND BLKD.

ALL* (See Note Above)

ASDB	J	WIDTH ACROSS FLATS

Definition: THE SHORTEST STRAIGHT LINE BETWEEN FLATS, PERPENDICULAR TO THE HEIGHT.

Reply Instructions: Enter the applicable Reply Codes from Tables 1 and 2 below, followed by the numeric value. (e.g., ASDBJAA3.610*; ASDBJLA25.4*; ASDBJAB3.510$$JAC3.710*)

Table 1

REPLY CODE	REPLY (AA05)
A	INCHES
L	MILLIMETERS

APP Key	MRC	Mode Code	Requirements

Table 2

REPLY CODE	REPLY (AC20)
A	NOMINAL
B	MINIMUM
C	MAXIMUM

ALL* (See Note Preceding MRC ASDB)

ABGB J WIDTH ACROSS CORNERS

Definition: A MEASUREMENT OF THE DISTANCE DIAGONALLY FROM ONE CORNER TO THE OPPOSITE CORNER.

Reply Instructions: Enter the applicable Reply Codes from Tables 1 and 2 below, followed by the numeric value. (e.g., ABGBJAA3.740*; ABGBJLA25.4*; ABGBJAB3.540$$JAC3.940*)

Table 1

REPLY CODE	REPLY (AA05)
A	INCHES
L	MILLIMETERS

Table 2

REPLY CODE	REPLY (AC20)
A	NOMINAL
B	MINIMUM
C	MAXIMUM

ALL* (See Note Preceding MRC ASDB)

ABNM J THICKNESS

Definition: A MEASUREMENT OF THE SMALLEST DIMENSION OF AN ITEM, IN DISTINCTION FROM LENGTH OR WIDTH.

Reply Instructions: Enter the applicable Reply Codes from Tables 1 and 2 below, followed by the numeric value. (e.g., ABNMJAA0.500*; ABNMJLA12.8*; ABNMJAB0.250$$JAC0.750*)

Table 1

REPLY CODE	REPLY (AA05)
A	INCHES
L	MILLIMETERS

APP Key	MRC	Mode Code	Requirements

Table 2

REPLY CODE	REPLY (AC20)
A	NOMINAL
B	MINIMUM
C	MAXIMUM

ALL* (See Note Preceding MRC ASDB)

ABKV J OUTSIDE DIAMETER

Definition: THE LENGTH OF A STRAIGHT LINE WHICH PASSES THROUGH THE CENTER OF A CIRCULAR FIGURE OR BODY, AND TERMINATES AT THE OUTSIDE CIRCUMFERENCE.

Reply Instructions: Enter the applicable Reply Codes from Tables 1 and 2 below, followed by the numeric value. (e.g., ABKVJAA6.624*; ABKVJLA25.4*; ABKVJAB6.524$$JAC6.724*)

Table 1

REPLY CODE	REPLY (AA05)
A	INCHES
L	MILLIMETERS

Table 2

REPLY CODE	REPLY (AC20)
A	NOMINAL
B	MINIMUM
C	MAXIMUM

ALL* (See Note Preceding MRC ASDB)

BLKD J CABLE DIAMETER ACCOMMODATED

Definition: THE LENGTH OF A STRAIGHT LINE WHICH PASSES THROUGH THE CENTER OF THE ACCOMMODATION FOR THE CABLE, AND TERMINATES AT THE CIRCUMFERENCE.

Reply Instructions: Enter the applicable Reply Codes from Tables 1 and 2 below, followed by the numeric value. (e.g., BLKDJAA0.975*; BLKDJLA25.4*; BLKDJAB0.875$$JAC1.075*)

APP Key	MRC	Mode Code	Requirements

Table 1

REPLY CODE	REPLY (AA05)
A	INCHES
L	MILLIMETERS

Table 2

REPLY CODE	REPLY (AC20)
A	NOMINAL
B	MINIMUM
C	MAXIMUM

SECTION: F

APP Key	MRC	Mode Code	Requirements
ALL			
	NAME	D	ITEM NAME

Definition: A NOUN, WITH OR WITHOUT MODIFIERS, BY WHICH AN ITEM OF SUPPLY IS KNOWN.

Reply Instructions: Enter the applicable Item Name Code from the index appearing in the General Information Section. (e.g., NAMED13009*)

ALL			
	STYL	L	STYLE DESIGNATOR

Definition: THE STYLE DESIGNATION INDICATING THE CONFIGURATION THAT MOST NEARLY CORRESPONDS TO THE APPEARANCE OF THE ITEM.

Reply Instructions: Enter the applicable group designator and style number from Appendix B , Reference Drawing Group B or C. (e.g., STYLLB2*)

SECTION: G

APP Key	MRC	Mode Code	Requirements
ALL			
	NAME	D	ITEM NAME

Definition: A NOUN, WITH OR WITHOUT MODIFIERS, BY WHICH AN ITEM OF SUPPLY IS KNOWN.

Reply Instructions: Enter the applicable Item Name Code from the index appearing in the General Information Section. (e.g., NAMED15849*)

ALL

MATL	D	MATERIAL

Definition: THE ELEMENT, COMPOUND, OR MIXTURE OF WHICH AN ITEM IS FABRICATED, EXCLUDING ANY SURFACE TREATMENT.

Reply Instructions: Enter the applicable Reply Code from the table below. (e.g., MATLDST0000*; MATLDST0000$$DTL0000*; MATLDST0000$DTL0000*)

REPLY CODE	REPLY (AD09)
STAAC0	CHROME-STEEL
ST0000	STEEL
TL0000	TOOL STEEL

ALL

STYL	L	STYLE DESIGNATOR

Definition: THE STYLE DESIGNATION INDICATING THE CONFIGURATION THAT MOST NEARLY CORRESPONDS TO THE APPEARANCE OF THE ITEM.

Reply Instructions: Enter the applicable group designator and style number from Appendix B , Reference Drawing Group A. (e.g., STYLLA3*)

SECTION: H

APP Key	MRC	Mode Code	Requirements
ALL			
	NAME	D	ITEM NAME

Definition: A NOUN, WITH OR WITHOUT MODIFIERS, BY WHICH AN ITEM OF SUPPLY IS KNOWN.

Reply Instructions: Enter the applicable Item Name Code from the index appearing in the General Information Section. (e.g., NAMED20966*)

ALL

ABHP	J	OVERALL LENGTH

Definition: THE DIMENSION MEASURED ALONG THE LONGITUDINAL AXIS WITH TERMINATED POINTS AT THE EXTREME ENDS OF THE ITEM.

Reply Instructions: Enter the applicable Reply Codes from Tables 1 and 2 below, followed by the numeric value. (e.g., ABHPJAA10.500*; ABHPJLA25.4*; ABHPJAB10.000$$JAC11.000*)

Table 1

REPLY CODE	REPLY (AA05)
A	INCHES
L	MILLIMETERS

Table 2

REPLY CODE	REPLY (AC20)
A	NOMINAL
B	MINIMUM
C	MAXIMUM

ALL

ABQB	J	TAPER MAJOR DIAMETER

Definition: THE LENGTH OF A STRAIGHT LINE WHICH PASSES THROUGH THE CENTER OF THE LARGEST CIRCULAR CROSS SECTION OF THE TAPERED PORTION, AND TERMINATES AT THE CIRCUMFERENCE.

Reply Instructions: Enter the applicable Reply Codes from Tables 1 and 2 below, followed by the numeric value. (e.g., ABQBJAA1.500*; ABQBJLA25.4*; ABQBJAB1.000$$JAC2.000*)

APP Key	MRC	Mode Code	Requirements

Table 1

REPLY CODE	REPLY (AA05)
A	INCHES
L	MILLIMETERS

Table 2

REPLY CODE	REPLY (AC20)
A	NOMINAL
B	MINIMUM
C	MAXIMUM

ALL

APHE D OPERATION METHOD

Definition: THE MEANS USED TO OPERATE THE ITEM.

Reply Instructions: Enter the applicable Reply Code from the table below. (e.g., APHEDAAAF*; APHEDAAAF$DAABG*)

REPLY CODE	REPLY (AC58)
AAAF	MANUAL
AABG	POWER

ALL

AKCV D DRIVE TYPE

Definition: INDICATES THE TYPE OF DRIVE FOR TURNING, ROTATING, OR POSITIONING THE MECHANISM.

Reply Instructions: Enter the applicable Reply Code from the table below. (e.g., AKCVDJM*; AKCVDJM$DAM*)

REPLY CODE	REPLY (AG25)
JM	MORSE TAPER
AM	SQUARE

NOTE FOR MRCS CHPQ, AMRN, AND CHPK: IF REPLY CODE JM IS ENTERED FOR MRC AKCV, REPLY TO MRC CHPQ. IF REPLY CODE AM IS ENTERED FOR MRC AKCV, REPLY TO MRCS AMRN AND CHPK.

APP Key	MRC	Mode Code	Requirements
ALL* (See Note Above)			
	CHPQ	A	MORSE TAPER DRIVE SIZE NUMBER

Definition: AN INDICATION OF THE MORSE TAPER DRIVE SIZE NUMBER.

Reply Instructions: Enter the size. (e.g., CHPQA3*; CHPQA3$A5*)

ALL* (See Note Preceding MRC CHPQ)

AMRN	J	SIZE DESIGNATOR

Definition: A DESIGNATION INDICATING THE SIZE BY WHICH THE ITEM IS COMMERCIALLY KNOWN AND/OR IDENTIFIED.

Reply Instructions: Enter the applicable Reply Codes from Tables 1 and 2 below, followed by the numeric value. (e.g., AMRNJAA1.000*; AMRNJLA25.4*; AMRNJAB0.500$$JAC1.500*)

Table 1

REPLY CODE	REPLY (AA05)
A	INCHES
L	MILLIMETERS

Table 2

REPLY CODE	REPLY (AC20)
A	NOMINAL
B	MINIMUM
C	MAXIMUM

ALL* (See Note Preceding MRC CHPQ)

CHPK	J	SQUARE SHANK LENGTH

Definition: A MEASUREMENT OF THE LONGEST DIMENSION OF A SQUARE SHANK, IN DISTINCTION FROM WIDTH.

Reply Instructions: Enter the applicable Reply Codes from Tables 1 and 2 below, followed by the numeric value. (e.g., CHPKJAA2.000*; CHPKJLA25.4*; CHPKJAB1.500$$JAC2.500*)

Table 1

REPLY CODE	REPLY (AA05)
A	INCHES
L	MILLIMETERS

APP Key	MRC	Mode Code	Requirements

Table 2

REPLY CODE	REPLY (AC20)
A	NOMINAL
B	MINIMUM
C	MAXIMUM

ALL

CHNX	D	HAND TURNING ROD

Definition: AN INDICATION OF WHETHER OR NOT A HAND TURNING ROD IS INCLUDED.

Reply Instructions: Enter the applicable Reply Code from the table below. (e.g., CHNXDB*; CHNXDB$DC*)

REPLY CODE	REPLY (AA49)
B	INCLUDED
C	NOT INCLUDED

SECTION: J

APP Key	MRC	Mode Code	Requirements
ALL			
	NAME	D	ITEM NAME

Definition: A NOUN, WITH OR WITHOUT MODIFIERS, BY WHICH AN ITEM OF SUPPLY IS KNOWN.

Reply Instructions: Enter the applicable Item Name Code from the index appearing in the General Information Section. (e.g., NAMED20965*)

ALL

CHRX	J	TUBE MINIMUM INSIDE DIAMETER ACCOMMODATED

Definition: THE SMALLEST MEASUREMENT OF A STRAIGHT LINE WHICH PASSES THROUGH THE CENTER OF A TUBE THE ITEM IS DESIGNED TO ACCOMMODATE, AND TERMINATES AT THE INSIDE CIRCUMFERENCE.

Reply Instructions: Enter the applicable Reply Code from the table below, followed by the numeric value. (e.g., CHRXJA1.740*; CHRXJL25.4*)

REPLY CODE	REPLY (AA05)
A	INCHES
L	MILLIMETERS

ALL

CHRY	J	RATED EXPANSION DIAMETER

Definition: THE LENGTH OF A STRAIGHT LINE WHICH PASSES THROUGH THE CENTER OF THE EXPANSION FOR WHICH THE ITEM IS RATED, AND TERMINATES AT THE CIRCUMFERENCE.

Reply Instructions: Enter the applicable Reply Code from the table below, followed by the numeric value. (e.g., CHRYJA1.250*; CHRYJL25.4*)

For items not rated, change the Mode Code to K and enter Reply Code N. (e.g., CHRYKN*)

REPLY CODE	REPLY (AA05)
A	INCHES
L	MILLIMETERS

APP Key	MRC	Mode Code	Requirements

ALL

CHRZ J TUBE SHEET MAXIMUM THICKNESS

Definition: A MAXIMUM MEASUREMENT OF THE SMALLEST DIMENSION OF THE TUBE SHEET, IN DISTINCTION FROM LENGTH OR WIDTH.

Reply Instructions: Enter the applicable Reply Code from the table below, followed by the numeric value. (e.g., CHRZJA1.500*; CHRZJL25.4*)

REPLY CODE	REPLY (AA05)
A	INCHES
L	MILLIMETERS

ALL

CHPT D CAGE ADJUSTABILITY

Definition: AN INDICATION OF WHETHER OR NOT THE CAGE IS ADJUSTABLE.

Reply Instructions: Enter the applicable Reply Code from the table below. (e.g., CHPTDC*; CHPTDA$DC*)

REPLY CODE	REPLY (AB00)
A	ADJUSTABLE
C	NONADJUSTABLE

ALL

CHPW J ROLL TYPE AND QUANTITY

Definition: INDICATES THE TYPE OF ROLL(S) AND THE NUMBER PROVIDED.

Reply Instructions: Enter the applicable Reply Code from the table below, followed by the quantity. (e.g., CHPWJAAH2*; CHPWJAAF2$JAAG2*)

REPLY CODE	REPLY (AM21)
AAE	FLARING
AAF	LONG

APP Key	MRC	Mode Code	Requirements
		AAG	LONG TAPERED
		AAH	SHORT
		AAJ	SHORT TAPERED

ALL

CHPX	G	ENTERING HANDHOLE SIZE

Definition: DESIGNATES THE SIZE OF THE RELATIVE OR PROPORTIONATE DIMENSIONS OF THE ENTERING HANDHOLE.

Reply Instructions: Enter the reply in clear text. (e.g., CHPXG3.781 BY 4.719 IN.*)

SECTION: K

APP Key	MRC	Mode Code	Requirements
ALL			
	NAME	D	ITEM NAME

Definition: A NOUN, WITH OR WITHOUT MODIFIERS, BY WHICH AN ITEM OF SUPPLY IS KNOWN.

Reply Instructions: Enter the applicable Item Name Code from the index appearing in the General Information Section. (e.g., NAMED05517*)

ALL

APGF	D	DESIGN TYPE

Definition: INDICATES THE DESIGN TYPE OF THE ITEM.

Reply Instructions: Enter the applicable Reply Code from the table below. (e.g., APGFDBQX*; APGFDBQX$DBMY*)

REPLY CODE	REPLY (AK54)
BQX	HYDRAULIC
BMY	MECHANICAL
CCB	PNEUMATIC

KA*, KB, KC

AAXX	D	MOUNTING TYPE

Definition: INDICATES THE TYPE OF MOUNT UTILIZED TO SUPPORT THE ITEM.

Reply Instructions: Enter the applicable Reply Code from the table below. (e.g., AAXXDAU*; AAXXDBT$DCA*)

REPLY CODE	REPLY (AA78)
BT	BENCH
CA	FLOOR
EE	PORTABLE
BY	TABLE
AU	WHEEL

APP Key	MRC	Mode Code	Requirements

NOTE FOR MRC CHPY: FOR APPLICABILITY KEY KA, IF A REPLY IS ENTERED FOR MRC AAXX, REPLY TO MRC CHPY.

KA*, KB, KC (See Note Above)

CHPY D MOUNTING

Definition: AN INDICATION OF WHETHER OR NOT A MOUNTING(S) IS INCLUDED.

Reply Instructions: Enter the applicable Reply Code from the table below. (e.g., CHPYDB*; CHPYDB$DC*)

REPLY CODE	REPLY (AA49)
B	INCLUDED
C	NOT INCLUDED

KA

APHE D OPERATION METHOD

Definition: THE MEANS USED TO OPERATE THE ITEM.

Reply Instructions: Enter the applicable Reply Code from the table below. (e.g., APHEDAAAP*; APHEDAAAP$DAABG*)

REPLY CODE	REPLY (AC58)
AAAP	HAND
AABG	POWER

NOTE FOR MRC BGSH: FOR APPLICABILITY KEY KA, IF REPLY CODE AABG IS ENTERED FOR MRC APHE, REPLY TO MRC BGSH.

KA*, KC (See Note Above)

BGSH D POWER UNIT

Definition: AN INDICATION OF WHETHER OR NOT A POWER UNIT IS INCLUDED.

Reply Instructions: Enter the applicable Reply Code from the table below. (e.g., BGSHDB*; BGSHDB$DC*)

APP Key	MRC	Mode Code	Requirements

REPLY CODE	REPLY (AA49)
B	INCLUDED
C	NOT INCLUDED

NOTE FOR MRCS ANCY, ATJK, AWJK, AND AKCV: IF REPLY CODE B IS ENTERED FOR MRC BGSH, REPLY TO MRCS ANCY AND ATJK. IF REPLY CODE C IS ENTERED FOR MRC BGSH, REPLY TO MRCS AWJK AND AKCV.

KA*, KC* (See Note Above)

ANCY B HORSEPOWER RATING

Definition: AN INDICATION OF THE RATED HORSEPOWER OF THE ITEM.

Reply Instructions: Enter the numeric value. (e.g., ANCYB1.250*)

For items not rated, change the Mode Code to K and enter Reply Code N. (e.g., ANCYKN*)

KA*, KC* (See Note Preceding MRC ANCY)

ATJK D POWER SOURCE

Definition: THE SOURCE OF POWER WHICH DRIVES THE ITEM.

Reply Instructions: Enter the applicable Reply Code from the table below. (e.g., ATJKDAD*; ATJKDAD$DAE*)

REPLY CODE	REPLY (AG27)
AD	ELECTRIC MOTOR
AE	GASOLINE ENGINE

NOTE FOR MRC ACDC: IF REPLY CODE AD IS ENTERED FOR MRC ATJK, REPLY TO MRC ACDC.

KA*, KC* (See Note Above)

ACDC D CURRENT TYPE

Definition: INDICATES THE TYPE OF CURRENT WHETHER ALTERNATING, DIRECT, OR BOTH.

APP Key	MRC	Mode Code	Requirements

Reply Instructions: Enter the applicable Reply Code from the table below. (e.g., ACDCDB*; ACDCDB$DC*)

REPLY CODE	REPLY (AB62)
B	AC
D	AC/DC
C	DC

NOTE FOR MRCS ELEC, FREQ, AND FAAZ: IF REPLY CODE B OR D IS ENTERED FOR MRC ACDC, REPLY TO MRCS ELEC, FREQ, AND FAAZ. IF REPLY CODE C IS ENTERED FOR MRC ACDC, REPLY TO MRC ELEC.

KA*, KC* (See Note Above)

ELEC B VOLTAGE IN VOLTS

Definition: THE TOTAL ELECTRICAL VOLTAGE.

Reply Instructions: Enter the numeric value. (e.g., ELECB12.0*)

If multiple voltages are for the same type of current, use AND coding ($$) entering in ascending sequence. If the multiple voltages represent AC and DC current, enter the AC voltages first. (e.g., ELECB110.0$B440.0*)

For items not rated, change the Mode Code to K and enter Reply Code N. (e.g., ELECKN*)

KA*, KC* (See Note Preceding MRC ELEC)

FREQ B FREQUENCY IN HERTZ

Definition: THE CYCLES PER SECOND (HERTZ) OF THE ALTERNATING CURRENT.

Reply Instructions: Enter the numeric value. (e.g., FREQB60.0*; FREQB60.0$B400.0*)

For items not rated, change the Mode Code to K and enter Reply Code N. (e.g., FREQKN*)

KA*, KC* (See Note Preceding MRC ELEC)

FAAZ D PHASE

APP Key	MRC	Mode Code	Requirements

Definition: THE NUMBER OF ALTERNATING CURRENT PHASES.

Reply Instructions: Enter the applicable Reply Code from the table below. (e.g., FAAZDA*; FAAZDB$DC*)

REPLY CODE	REPLY (AD02)
A	SINGLE
E	SINGLE/THREE
C	THREE
B	TWO

KA*, KC* (See Note Preceding MRC ANCY)

AWJK B HORSEPOWER REQUIRED

Definition: THE HORSEPOWER REQUIRED TO OPERATE THE ITEM.

Reply Instructions: Enter the numeric value. (e.g., AWJKB1.250*)

KA*, KC* (See Note Preceding MRC ANCY)

AKCV D DRIVE TYPE

Definition: INDICATES THE TYPE OF DRIVE FOR TURNING, ROTATING, OR POSITIONING THE MECHANISM.

Reply Instructions: Enter the applicable Reply Code from the table below. (e.g., AKCVDAG*; AKCVDAC$DAG*)

REPLY CODE	REPLY (AG25)
A	ANY ACCEPTABLE
AC	DIRECT
AG	GEAR
BW	PULLEY

NOTE FOR MRCS ATQL AND ATQM: IF REPLY CODE BW IS ENTERED FOR MRC AKCV, REPLY TO MRCS ATQL AND ATQM.

KA*, KC* (See Note Above)

ATQL J PULLEY DIAMETER

APP Key	MRC	Mode Code	Requirements

Definition: THE LENGTH OF A STRAIGHT LINE WHICH PASSES THROUGH THE CENTER OF THE PULLEY, AND TERMINATES AT THE CIRCUMFERENCE.

Reply Instructions: Enter the applicable Reply Codes from Tables 1 and 2 below, followed by the numeric value. (e.g., ATQLJAA8.000*; ATQLJLA25.4*; ATQLJAB7.000$$JAC9.000*)

Table 1

REPLY CODE	REPLY (AA05)
A	INCHES
L	MILLIMETERS

Table 2

REPLY CODE	REPLY (AC20)
A	NOMINAL
B	MINIMUM
C	MAXIMUM

KA*, KC* (See Note Preceding MRC ATQL)

ATQM J PULLEY FACE WIDTH

Definition: A MEASUREMENT TAKEN AT RIGHT ANGLES TO THE LENGTH OF THE PULLEY FACE, IN DISTINCTION FROM THICKNESS.

Reply Instructions: Enter the applicable Reply Codes from Tables 1 and 2 below, followed by the numeric value. (e.g., ATQMJAA2.000*; ATQMJLA25.4*; ATQMJAB1.000$$JAC3.000*)

Table 1

REPLY CODE	REPLY (AA05)
A	INCHES
L	MILLIMETERS

Table 2

REPLY CODE	REPLY (AC20)
A	NOMINAL
B	MINIMUM
C	MAXIMUM

KA

APP Key	MRC	Mode Code	Requirements
	BMDG	J	MAXIMUM MATERIAL DIAMETER ACCOMMODATED

Definition: THE MAXIMUM LENGTH OF A STRAIGHT LINE WHICH PASSES THROUGH THE CENTER OF THE ACCOMMODATION FOR THE MATERIAL, AND TERMINATES AT THE CIRCUMFERENCE.

Reply Instructions: Enter the applicable Reply Code from the table below. (e.g., BMDGJA6.500*)

REPLY CODE	REPLY (AA05)
A	INCHES
L	MILLIMETERS

KB*, KC*

CHRS	J	WORKING WIDTH

Definition: A MEASUREMENT OF THE WORKING WIDTH OF THE ITEM.

Reply Instructions: Enter the applicable Reply Codes from Tables 1 and 2 below, followed by the numeric value. (e.g., CHRSJAA42.000*; CHRSJLA100.7*; CHRSJAB41.000$$JAC43.000*)

Table 1

REPLY CODE	REPLY (AA05)
A	INCHES
L	MILLIMETERS

Table 2

REPLY CODE	REPLY (AC20)
A	NOMINAL
B	MINIMUM
C	MAXIMUM

NOTE FOR MRCS BNPP AND BNPQ: IF THE SOURCE DOCUMENT INDICATES A METAL GAGE THICKNESS, REPLY TO MRC BNPP. IF A DIMENSIONAL VALUE IS INDICATED, REPLY TO MRC BNPQ.

KB*, KC* (See Note Above)

BNPP	A	METAL GAGE DESIGNATOR

APP Key	MRC	Mode Code	Requirements

Definition: THE DESIGNATOR FOR THE GAGE OF THE METAL.

Reply Instructions: Enter the gage designator. (e.g., BNPPA9*)

KB*, KC* (See Note Preceding MRC BNPP)

BNPQ J METAL THICKNESS

Definition: A MEASUREMENT OF THE SMALLEST DIMENSION OF THE METAL, IN DISTINCTION FROM LENGTH OR WIDTH.

Reply Instructions: Enter the applicable Reply Codes from Tables 1 and 2 below, followed by the numeric value. (e.g., BNPQJAA0.063*)

When the source document specifies tolerance or range, use AND coding ($$), entering the minimum value first. (e.g., BNPQJAB0.094$$JAC0.125*)

Table 1

REPLY CODE	REPLY (AA05)
A	INCHES
L	MILLIMETERS

Table 2

REPLY CODE	REPLY (AC20)
A	NOMINAL
B	MINIMUM
C	MAXIMUM

KA*, KB, KC*

ACJL B BEND ANGLE IN DEG

Definition: THE ANGULAR MEASUREMENT BY WHICH ONE PART/SECTION OF A RIGID ITEM DEVIATES FROM A STRAIGHT LINE PROJECTION OF AN ADJACENT PART/SECTION, EXPRESSED IN DEGREES.

Reply Instructions: Enter the numeric value. (e.g., ACJLB90.0*)

NOTE FOR MRC CHPZ: FOR INC 05517, A REPLY TO THIS MRC IS MANDATORY.

KA*

CHPZ G PIPE DIE QUANTITY AND SIZE

APP Key	MRC	Mode Code	Requirements
	Definition: AN INDICATION OF THE NUMBER AND SIZE(S) OF THE PIPE DIE(S) INCLUDED. Reply Instructions: Enter the reply in clear text. (e.g., CHPZG1, 1-1/4 IN.*)		
ALL*			
	AKYN	G	FURNISHED ITEMS AND QUANTITY
	Definition: THE NAME AND NUMBER OF THOSE PARTS FURNISHED WITH THE ITEM OF SUPPLY THAT HAVE NOT BEEN SPECIFIED ELSEWHERE. Reply Instructions: Enter the reply in clear text. (e.g., AKYNGWRENCH, 1*)		

SECTION: STANDARD

APP Key	MRC	Mode Code	Requirements
ALL*			
	FEAT	G	SPECIAL FEATURES

Definition: THOSE UNUSUAL OR UNIQUE CHARACTERISTICS OR QUALITIES OF AN ITEM NOT COVERED IN THE OTHER REQUIREMENTS AND WHICH ARE DETERMINED TO BE ESSENTIAL FOR IDENTIFICATION.

Reply Instructions: Enter the reply in clear text. Separate multiple replies with a semicolon. (e.g., FEATGADJUSTABLE NOSE CLIP*; FEATGADJUSTABLE NOSE PIECE; DISPOSABLE*)

ALL*

TEST J TEST DATA DOCUMENT

Definition: THE SPECIFICATION, STANDARD, DRAWING, OR SIMILAR INSTRUMENT THAT SPECIFIES ENVIRONMENTAL AND PERFORMANCE REQUIREMENTS OR TEST CONDITIONS UNDER WHICH AN ITEM IS TESTED AND ESTABLISHES ACCEPTABLE LIMITS WITHIN WHICH THE ITEM MUST CONFORM IDENTIFIED BY AN ALPHABETIC AND/OR NUMERIC REFERENCE NUMBER. INCLUDES THE COMMERCIAL AND GOVERNMENT ENTITY (CAGE) CODE OF THE ENTITY CONTROLLING THE INSTRUMENT.

Reply Instructions: Enter the applicable Reply Code from the table below, followed by the 5-position CAGE Code, a dash, and the document identification number.

(e.g., TESTJA12345-CWX654321*;

TESTJA1234A-654321$$JB5556A-663654*;

TESTJAA2345-654321$JB55566-663654*)

REPLY CODE	REPLY (AC28)
C	DRAWING (This is the basic governing drawing, such as a contractor drawing, original equipment manufacturer drawing, etc.; excludes any specification, standard, or other document that may be referenced in a basic governing drawing)
A	SPECIFICATION (Includes engineering type bulletins, brochures, etc., that reflect specification type data in specification format; excludes commercial catalogs, industry directories, and similar trade publications,

APP Key	MRC	Mode Code	Requirements
			reflecting general type data on certain environmental and performance requirements and test conditions that are shown as "typical," "average," "nominal," etc.)
		B	STANDARD (Includes industry or association standards, individual manufacturer standards, etc.)

ALL*

SPCL G SPECIAL TEST FEATURES

Definition: TEST CONDITIONS AND RATINGS, OR ENVIRONMENTAL AND PERFORMANCE REQUIREMENTS THAT ARE DIFFERENT, MORE CRITICAL, OR MORE SPECIFIC THAN THOSE SPECIFIED IN A GOVERNING TEST DATA DOCUMENT.

Reply Instructions: Enter the reply in clear text. (e.g., SPCLGSELECTED AND TESTED FOR NAVIGATIONAL SYSTEMS*)

ALL*

ZZZK J SPECIFICATION/STANDARD DATA

Definition: THE DOCUMENT DESIGNATOR OF THE SPECIFICATION OR STANDARD WHICH ESTABLISHED THE ITEM OF SUPPLY.

Reply Instructions: Enter the applicable Reply Code from the table below, followed by the Commercial and Government Entity (CAGE) Code of the entity controlling the document, a dash, and the document designator. The agency that controls the limited coordination document must be preceded and followed by a slash following the designator. The word canceled or superseded must be preceded and followed by a slash for the designator. Professional and industrial association specifications/standards are differentiated from a manufacturer's specification in that the data has been coordinated and published by the professional and industrial association. Include amendments and revisions where applicable.

(e.g., ZZZKJT81337-30642B*;

ZZZKJS81349-MIL-D-180 REV1/CANCELED/*;

ZZZKJP80205-NAS1103*;

ZZZKJS81349-MIL-C-1140C/CE/*;

ZZZKJT81337-30642B$$JP80205-NAS1103*)

APP Key	MRC	Mode Code	Requirements

REPLY CODE	REPLY (AN62)
S	GOVERNMENT SPECIFICATION
T	GOVERNMENT STANDARD
D	MANUFACTURERS SOURCE CONTROL
R	MANUFACTURERS SPECIFICATION
N	MANUFACTURERS SPECIFICATION CONTROL
M	MANUFACTURERS STANDARD
A	PROFESSIONAL/INDUSTRIAL ASSOCIATION SPECIFICATION
P	PROFESSIONAL/INDUSTRIAL ASSOCIATION STANDARD

NOTE FOR MRC ZZZT: IF THE SPECIFICIATION/STANDARD CITED IN REPLY TO MRC ZZZK IS NONDEFINITIVE, REPLY TO MRC ZZZT. THIS REPLY IS THE DATA WHICH IS NOT RECORDED IN SEGMENT C.

ALL* (See Note Above)

ZZZT J NONDEFINITIVE SPEC/STD DATA

Definition: THE NUMBER, LETTER, OR SYMBOL THAT INDICATES THE TYPE, STYLE, GRADE, CLASS, AND THE LIKE, OF AN ITEM IN A NONIDENTIFYING SPECIFICATION OR STANDARD.

Reply Instructions: Enter the applicable Reply Code from Appendix A , Table 1, followed by the appropriate number, letter, or symbol. (e.g., ZZZTJTY1*; ZZZTJTY1$$JSTA*; ZZZTJTY1$JSTA*)

ALL*

ZZZW G DEPARTURE FROM CITED DOCUMENT

Definition: THE TECHNICAL DIFFERENTIATING CHARACTERISTIC(S) OF AN ITEM OF SUPPLY WHICH DEPART(S) FROM THE TEXT OF A SPECIFICATION OR A STANDARD IN THAT IT REPRESENTS A SELECTION OF CHARACTERISTICS STATED IN THE SPECIFICATION OR STANDARD AS BEING OPTIONAL, OR A VARIATION FROM ONE OR MORE OF THE STATED CHARACTERISTICS, OR AN ADDITIONAL CHARACTERISTIC NOT STATED IN THE SPECIFICATION OR STANDARD.

Reply Instructions: Enter the reply in clear text. (e.g., ZZZWGAS MODIFIED BY MATERIAL*)

APP Key	MRC	Mode Code	Requirements
ALL*			
	ZZZX	G	DEPARTURE FROM CITED DESIGNATOR

Definition: THE VARIATION WHEN THE ITEM IS IN CONFORMITY WITH A TYPE DESIGNATOR COVERED BY A SPECIFICATION OR STANDARD, EXCEPT IN REGARD TO ONE OR MORE TECHNICAL DIFFERENTIATING CHARACTERISTICS.

Reply Instructions: Enter the reply in clear text. (e.g., ZZZXGAS MODIFIED BY MATERIAL*)

ALL*

ZZZY	G	REFERENCE NUMBER DIFFERENTIATING CHARACTERISTICS

Definition: A FEATURE OF THE ITEM OF SUPPLY WHICH MUST BE SPECIFICALLY RECORDED WHEN THE REFERENCE NUMBER COVERS A RANGE OF ITEMS.

Reply Instructions: Enter the reply in clear text. (e.g., ZZZYGCOLOR CODED LEADS*; ZZZYGAS DIFFERENTIATED BY MATERIAL*)

ALL*

CRTL	A	CRITICALITY CODE JUSTIFICATION

Definition: THE MASTER REQUIREMENT CODES OF THOSE REQUIREMENTS WHICH ARE TECHNICALLY CRITICAL BY REASON OF TOLERANCE, FIT, PERFORMANCE, OR OTHER CHARACTERISTICS WHICH AFFECT IDENTIFICATION OF THE ITEM.

Reply Instructions: Enter the Master Requirement Code for the requirement, the reply to which renders the item as being critical. (e.g., CRTLAMATL*; CRTLAMATL$$ASURF*)

Reply to this requirement only if the header record for the item identification for the item being identified has been coded as critical.

NOTE FOR MRC PRPY: IF DOCUMENT AVAILABILITY CODE B, D, F, OR H, REPLY TO MRC PRPY.

ALL* (See Note Above)

APP Key	MRC	Mode Code	Requirements
	PRPY	A	PROPRIETARY CHARACTERISTICS

Definition: IDENTIFICATION OF THOSE CHARACTERISTICS INCLUDED IN THE DESCRIPTION FOR WHICH A NON-GOVERNMENT ACTIVITY HAS IDENTIFIED ALL OR SELECTED CHARACTERISTICS OF THE ITEM AS BEING PROPRIETARY AND THEREFORE RESTRICTED FROM RELEASE OUTSIDE THE GOVERNMENT WITHOUT PRIOR PERMISSION OF THE ORIGINATOR OF THE DATA.

Reply Instructions: Enter the MRC codes of the individual characteristics of the description which are marked proprietary on the technical data, using AND coding ($$) for multiple characteristics. If all the MRCs are proprietary, enter the reply PACS. If none of the MRCs is proprietary, enter the reply NPAC. (e.g., PRPYAPACS*; PRPYANPAC*; PRPYAMATL$$ASURF*)

ALL*

	ELRN	G	EXTRA LONG REFERENCE NUMBER

Definition: A REFERENCE NUMBER EXCEEDING 32 POSITIONS.

Reply Instructions: Enter the entire reference number. Do not include the 5-position Commercial and Government Entity (CAGE) Code. (e.g., ELRNGANN112036BIL060557LEN0313605UZ062365*)

In determining quantity of characters in the reference number, count will be made after modification in accordance with Volume 2, Chapter 9, FLIS Procedures Manual, DoD 4100.39-M.

ALL*

	ELCD	D	EXTRA LONG CHARACTERISTIC DESCRIPTION

Definition: A DESCRIPTION THAT EXCEEDS 5000 CHARACTERS.

Reply Instructions: Enter the Reply Code from the table below. (e.g., ELCDDA*)

REPLY CODE	REPLY (AN58)
A	ADDITIONAL DESCRIPTIVE DATA ON MANUAL RECORD

SECTION: SUPPTECH

APP Key	MRC	Mode Code	Requirements
ALL			
	AFJK	J	CUBIC MEASURE

Definition: A MEASUREMENT OF VOLUME TAKEN BY MULTIPLYING THE LENGTH BY THE WIDTH BY THE HEIGHT OF AN ITEM AND RENDERED IN CUBIC UNITS.

Reply Instructions: Enter the applicable Reply Code from the table below, followed by the numeric value. (e.g., AFJKJF1.0219*)

REPLY CODE	REPLY (AD42)
F	CUBIC FEET
E	CUBIC METERS

ALL

SUPP	G	SUPPLEMENTARY FEATURES

Definition: CHARACTERISTICS OR QUALITIES OF AN ITEM, NOT COVERED IN ANY OTHER REQUIREMENT, WHICH ARE CONSIDERED ESSENTIAL INFORMATION FOR ONE OR MORE FUNCTIONS EXCLUDING NSN ASSIGNMENT.

Reply Instructions: Enter the reply in clear text. (e.g., SUPPGMAY INCL HOLE IN UPPER SUPPORT FOR MTG DURING SHIPMENT*)

ALL

ZZZP	J	PURCHASE DESCRIPTION IDENTIFICATION

Definition: THE CONTROLLING ACTIVITY AND IDENTIFICATION OF A DOCUMENT USED IN LIEU OF A SPECIFICATION IN THE PROCUREMENT OF AN ITEM OF SUPPLY.

Reply Instructions: Enter the 5-position Commercial and Government Entity (CAGE) Code, followed by a dash and the identifying number of the document.

(e.g., ZZZPJ81A37-30624A*)

ALL

ZZZV	G	FSC APPLICATION DATA

APP Key	MRC	Mode Code	Requirements

Definition: THE JUSTIFICATION FOR THE ASSIGNMENT OF A FEDERAL SUPPLY CLASS (FSC) TO AN ITEM BASED ON THE CLASSIFICATION OF THE NEXT HIGHER CLASSIFIABLE ASSEMBLY.

Reply Instructions: Enter the name of the next higher classifiable assembly in clear text. (e.g., ZZZVGBEARINGS, ANTIFRICTION, UNMOUNTED*)

ALL

AGAV	G	END ITEM IDENTIFICATION

Definition: THE NATIONAL STOCK NUMBER OR THE IDENTIFICATION INFORMATION OF THE END EQUIPMENT FOR WHICH THE ITEM IS A PART.

Reply Instructions: Enter the applicable reply in clear text.

(e.g., AGAVG3930-00-000-0000*;

AGAVGFORKLIFT TRUCK, SMITH CORPORATION, MODEL 12, TYPE A*)

ALL

CXCY	G	PART NAME ASSIGNED BY CONTROLLING AGENCY

Definition: THE NAME ASSIGNED TO THE ITEM BY THE GOVERNMENT AGENCY OR COMMERCIAL ORGNIZATION CONTROLLING THE DESIGN OF THE ITEM.

Reply Instructions: Enter the reply in clear text. (e.g., CXCYGLINE PROCESSOR CONTROL BOARD*)

[Blank Page]

Reply Tables

Table 1 - NONDEFINITIVE SPEC/STD DATA 81

Table 1 - NONDEFINITIVE SPEC/STD DATA

NONDEFINITIVE SPEC/STD DATA

REPLY CODE	REPLY (AD08)
AL	ALLOY
AN	ANNEX
AP	APPENDIX
AC	APPLICABILITY CLASS
AR	ARRANGEMENT
AS	ASSEMBLY
AB	ASSORTMENT
BX	BOX
CY	CAPACITY
CA	CASE
CT	CATEGORY
CL	CLASS
CE	CODE
CR	COLOR
CC	COMBINATION CODE
CN	COMPONENT
CP	COMPOSITION
CM	COMPOUND
CD	CONDITION
CS	CONSTRUCTION
DE	DESIGN
DG	DESIGNATOR
DW	DRAWING NUMBER
EG	EDGE
EN	END
FY	FAMILY
FG	FIGURE
FN	FINISH
FM	FORM
FA	FORMULA
GR	GRADE
GP	GROUP
NS	INSERT
TM	ITEM
KD	KIND
KT	KIT
LG	LENGTH
LT	LIMIT
MK	MARK
ML	MATERIAL
MH	MESH
ME	METHOD
MD	MODEL

REPLY CODE	REPLY (AD08)
MT	MOUNTING
NR	NUMBER
PT	PART
PN	PATTERN
PC	PHYSICAL CONDITION
PS	PIECE
PL	PLAN
PR	POINT
QA	QUALITY
RN	RANGE
RT	RATING
RF	REFERENCE NUMBER
SC	SCHEDULE
SB	SECTION
SL	SELECTION
SE	SERIES
SV	SERVICE
SX	SET
SA	SHADE
SH	SHAPE
SG	SHEET
SZ	SIZE
PZ	SPECIES
SQ	SPECIFICATION SHEET
SD	SPEED
ST	STYLE
SS	SUBCLASS
SF	SUBFORM
SP	SUBTYPE
SN	SURFACE CONDITION
SY	SYMBOL
SM	SYSTEM
TB	TABLE
TN	TANNAGE
TP	TEMPER
TX	TEXTURE
TK	THICKNESS
TT	TREATMENT
TR	TRIM
TY	TYPE
YN	UNIT
VA	VARIETY
WT	WEIGHT
WD	WIDTH

Reference Drawing Groups

REFERENCE DRAWING GROUP A Tables 84
REFERENCE DRAWING GROUP A 86
REFERENCE DRAWING GROUP B Tables 88
REFERENCE DRAWING GROUP B 89
REFERENCE DRAWING GROUP C Tables 91
REFERENCE DRAWING GROUP C 92

REFERENCE DRAWING GROUP A Tables
ROLLER STYLES

INDEX OF MASTER REQUIREMENT CODES

Enter the applicable Identified Secondary Address Coding (I/SAC) from Tables 1 below, followed by the Reply Codes from Tables 2, and 3 below, followed by the numeric value. (e.g., AGAH1AJAA2.250*; AGAH1FJLA1.875*; AGAH1AJAB2.250$$JAC2.260*)

Table 1

REPLY CODE	REPLY (0295)
1K	FIFTH STYLE GROUP
1F	FIRST STYLE GROUP
1J	FOURTH STYLE GROUP
1G	SECOND STYLE GROUP
1L	SINGLE STYLE GROUP
1H	THIRD STYLE GROUP

Table 2

REPLY CODE	REPLY (AA05)
A	INCHES
L	MILLIMETERS

Table 3

REPLY CODE	REPLY (AC20)
A	NOMINAL
B	MINIMUM
C	MAXIMUM

MRC	Mode Code	Name of Dimension
AAHE	J	FIRST END FLARE LENGTH
ABTZ	J	OVERALL LENGTH
AGAH	J	MAIN BODY OVERALL LENGTH
AMCS	J	FIRST END TAPER LENGTH
AMDL	J	FIRST END DIAMETER
AMFM	J	SECOND END TAPER LENGTH
AMFZ	J	SECOND END DIAMETER
BPNY	J	COUNTERSINK LENGTH

MRC	Mode Code	Name of Dimension
CQBH	J	FIRST END RADIUS
BMZB	G	SECOND END FLARE DIAMETER

Enter the reply in clear text. (e.g., BMZBG45.0 DEG*; BMZBG0.441 IN. DIA*)

REFERENCE DRAWING GROUP A

TUBE EXPANDER ROLLS

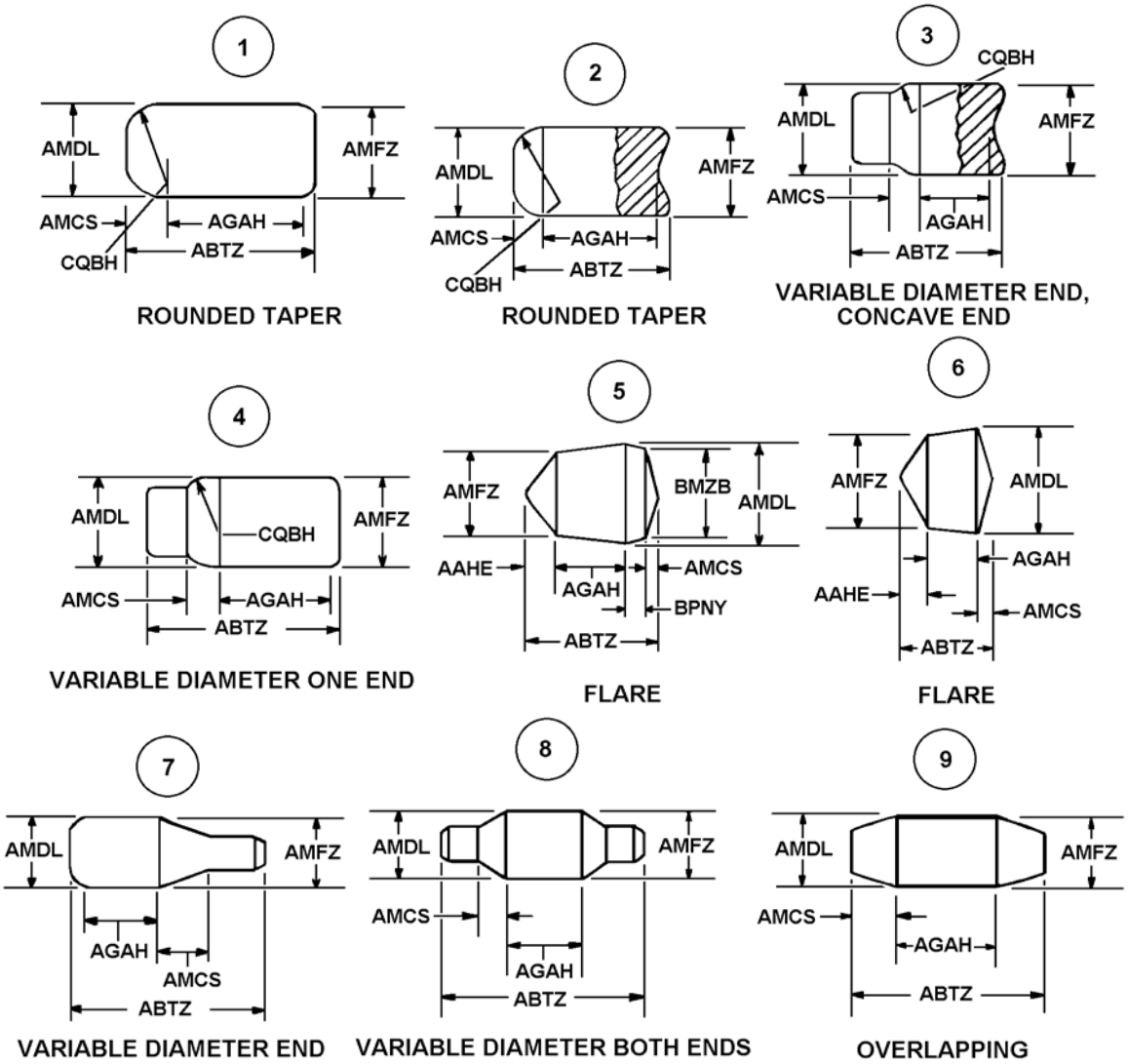

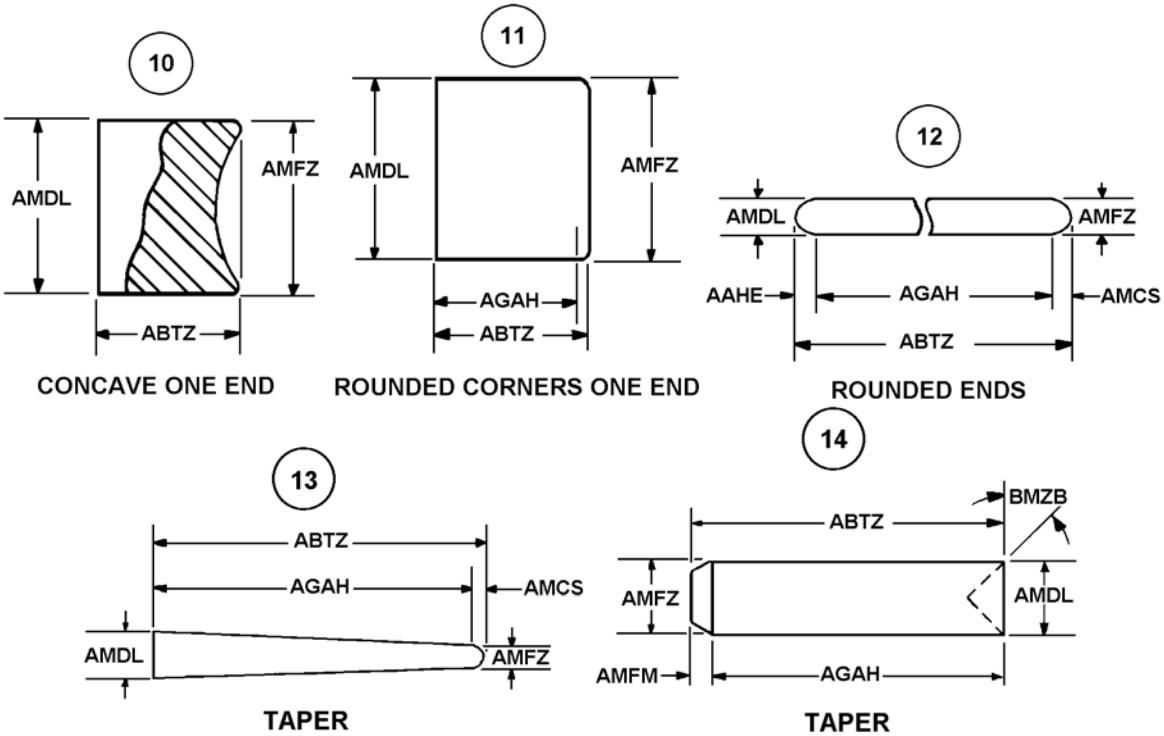
10
AMDL
AMFZ
ABTZ
CONCAVE ONE END
11
AMDL
AMFZ
AGAH
ABTZ
ROUNDED CORNERS ONE END
12
AMDL
AMFZ
AAHE
AGAH
AMCS
ABTZ
ROUNDED ENDS
13
ABTZ
AGAH
AMCS
AMDL
AMFZ
TAPER
14
BMZB
ABTZ
AMFZ
AMDL
AMFM
AGAH
TAPER

REFERENCE DRAWING GROUP B Tables
DIE STYLES

INDEX OF MASTER REQUIREMENT CODES

Enter the applicable Reply Codes from Tables 1 and 2 below, followed by the numeric value. (e.g., ABKWJAA2.375*; ABKWJAB2.275$$JAC2.475*)

REPLY CODE	REPLY (AA05)
A	INCHES
L	MILLIMETERS

REPLY CODE	REPLY (AC20)
A	NOMINAL
B	MINIMUM
C	MAXIMUM

MRC	Mode Code	Name of Dimension
AAZE	J	SHANK DIAMETER
ABKW	J	OVERALL HEIGHT
CHPL	J	GUIDE HOLE DIAMETER
CHPM	J	MACHINE END DIAMETER
CHPN	J	HOLE CENTER DISTANCE TO FLAT

Enter the reply in clear text. (e.g., ABUJA5/8-18*)

MRC	Mode Code	Name of Dimension
ABUJ	A	THREAD SIZE

REFERENCE DRAWING GROUP B

DIE STYLES

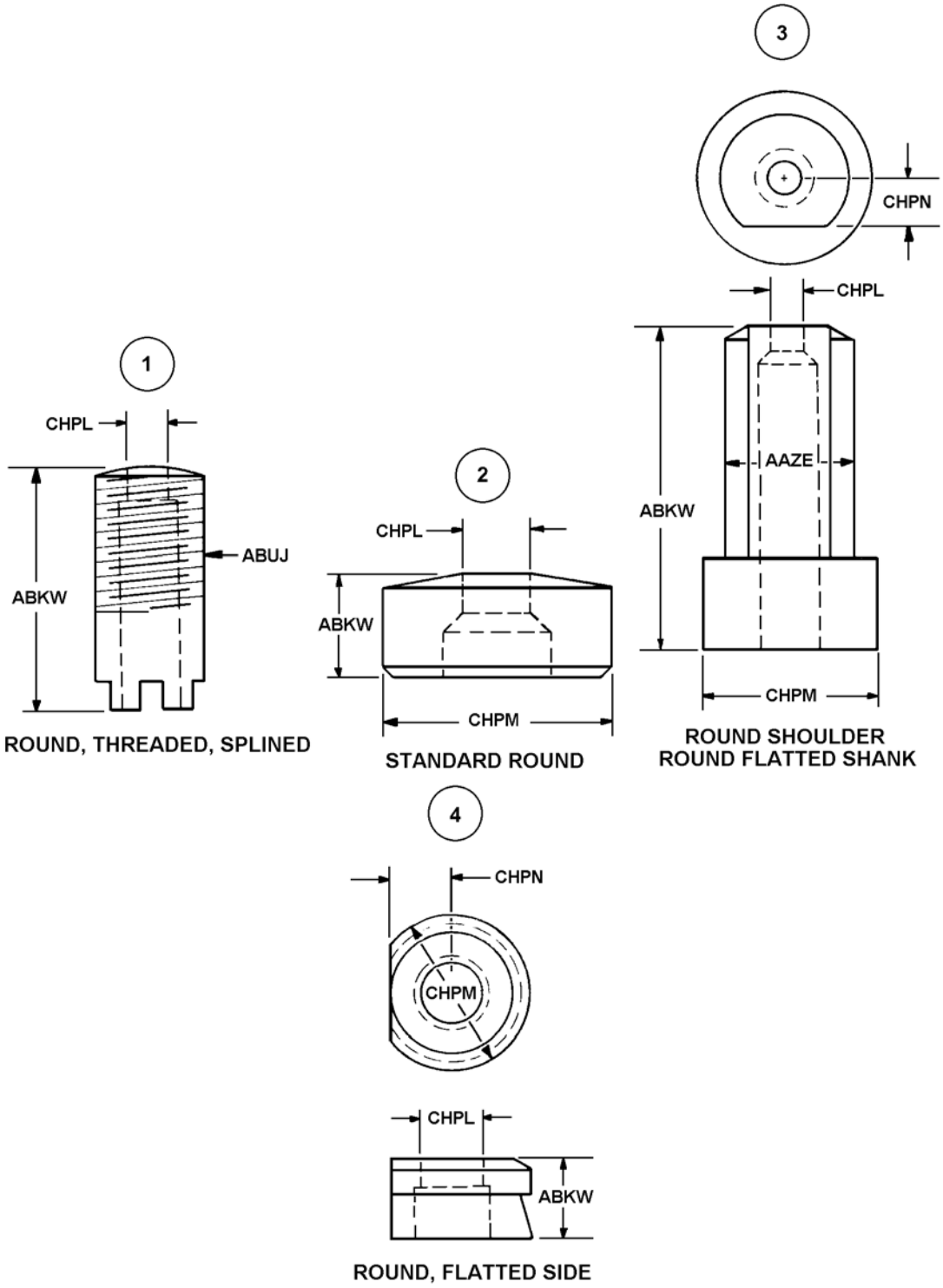
1
CHPL
ABUJ
ABKW
ROUND, THREADED, SPLINED
2
CHPL
ABKW
CHPM
STANDARD ROUND
3
CHPN
CHPL
AAZE
ABKW
CHPM
ROUND SHOULDER
ROUND FLATTED SHANK
4
CHPN
CHPM
CHPL
ABKW
ROUND, FLATTED SIDE

REFERENCE DRAWING GROUP C Tables
PUNCH STYLES

INDEX OF MASTER REQUIREMENT CODES

Enter the applicable Reply Codes from Tables 1 and 2 below, followed by the numeric value. (e.g., ABKWJAA2.375*; ABKWJLA25.4*; ABKWJAB2.275$$JAC2.475*)

REPLY CODE	REPLY (AA05)
A	INCHES
L	MILLIMETERS

REPLY CODE	REPLY (AC20)
A	NOMINAL
B	MINIMUM
C	MAXIMUM

MRC	Mode Code	Name of Dimension
AAZE	J	SHANK DIAMETER
ABKW	J	OVERALL HEIGHT
CHPM	J	MACHINE END DIAMETER
CHPP	J	PUNCHING DIAMETER

REFERENCE DRAWING GROUP C

PUNCH STYLES

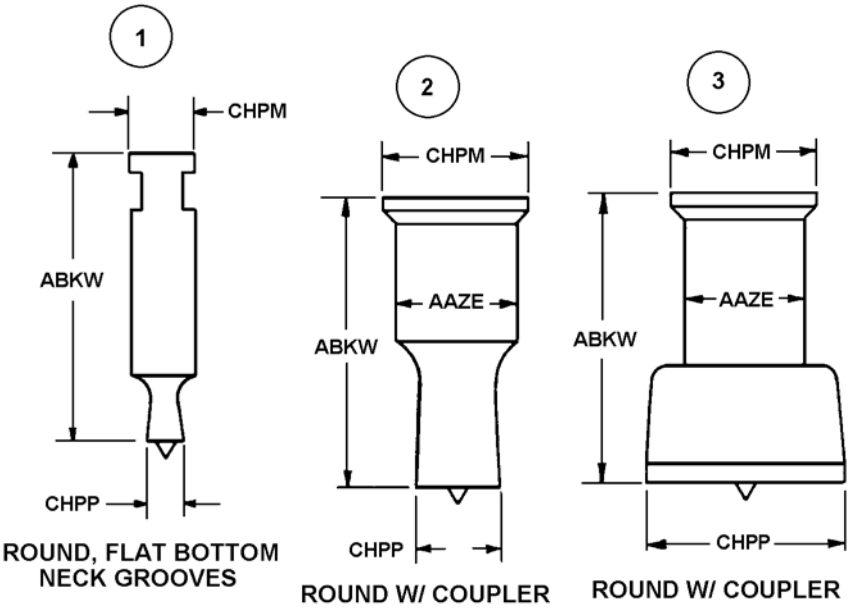

Technical Data Tables

IDENTIFIED SECONDARY ADDRESS CODES 94
STANDARD FRACTION TO DECIMAL CONVERSION CHART 95

IDENTIFIED SECONDARY ADDRESS CODES

Select the applicable Identified Secondary Address Codes from the table below for entering the replies to MRCs ATBH, AJUW, and dimensional MRCs in Appendix B, Reference Drawing Group A.

For sets with more than one style and/or size roller, and only one reply is required for a MRC in a group, select the applicable Secondary Address Codes 1A, 1B, 1C, 1D, and/or 1E. If more than one reply is required for a MRC in a group, select the applicable second level Secondary Address Code for entering the replies.

For sets with rollers of the same style and size, use the applicable Secondary Address Codes indicating "SINGLE STYLE SET."

1A	FIRST STYLE GROUP
1B	SECOND STYLE GROUP
1C	THIRD STYLE GROUP
1D	FOURTH STYLE GROUP
1E	FIFTH STYLE GROUP
1F	SINGLE STYLE GROUP

2AA	FIRST STYLE GROUP
2AB	FIRST STYLE GROUP
2BA	SECOND STYLE GROUP
2BB	SECOND STYLE GROUP
2CA	THIRD STYLE GROUP
2CB	THIRD STYLE GROUP

2DA	FOURTH STYLE GROUP
2DB	FOURTH STYLE GROUP
2EA	FIFTH STYLE GROUP
2EB	FIFTH STYLE GROUP
2FA	SINGLE STYLE SET
2FB	SINGLE STYLE SET

STANDARD FRACTION TO DECIMAL CONVERSION CHART

4ths	8ths	16ths	32nds	64ths	To 3	To 4	4ths	8ths	16ths	32nds	64ths	To 3	To 4
				1/64	.016	.0156					33/64	.516	.5156
			1/32	-----	.031	.0312				17/32	------	.531	.5312
				3/64	.047	.0469					35/64	.547	.5469
		1/16	-----		.062	.0625			9/16	-----	-----	.562	.5625
				5/64	.078	.0781					37/64	.578	.5781
			3/32	-----	.094	.0938				19/32	------	.594	.5938
				7/64	.109	.1094					39/64	.609	.6094
	1/8	-----	-----	-----	.125	.1250		5/8	-----	-----	-----	.625	.6250
				9/64	.141	.1406					41/64	.641	.6406
			5/32	-----	.156	.1562				21/32	------	.656	.6562
				11/64	.172	.1719					43/64	.672	.6719
		3/16	-----	-----	.188	.1875			11/16	-----	-----	.688	.6875
				13/64	.203	.2031					45/64	.703	.7031
			7/32	------	.219	.2188				23/32	------	.719	.7188
				15/64	.234	.2344					47/64	.734	.7344
1/4	-----	-----	-----	-----	.250	.2500	3/4	-----	-----	-----	-----	.750	.7500
				17/64	.266	.2656					49/64	.766	.7656
			9/32	------	.281	.2812				25/32	------	.781	.7812
				19/64	.297	.2969					51/64	.797	.7969
		5/16	-----	-----	.312	.3125			13/16	-----	-----	.812	.8125
				21/64	.328	.3281					53/64	.828	.8281
			11/32	------	.344	.3438				27/32	------	.844	.8438
				23/64	.359	.3594					55/64	.859	.8594
	3/8	-----	-----	-----	.375	.3750		7/8	-----	-----	-----	.875	.8750
				25/64	.391	.3906					57/64	.891	.8906
			13/32	------	.406	.4062				29/32	------	.906	.9062
				27/64	.422	.4219					59/64	.922	.9219
		7/16	-----	-----	.438	.4375			15/16	-----	-----	.938	.9375
				29/64	.453	.4531					61/64	.953	.9531
			15/32	------	.469	.4688				31/32	------	.969	.9688
				31/64	.484	.4844					63/64	.984	.9844
					.500	.5000						1.000	1.0000

FIIG Change List

FIIG Change List, Effective September 3, 2010

This change replaced with ISAC or and/or coding.