FEDERAL ITEM IDENTIFICATION GUIDE

REFRIGERATION AND AIR CONDITIONING COMPONENTS

This Reprint replaces FIIG T240, dated December 7, 2007.

Commander

Defense Logistics Information Service

ATTN: DLIS-K

74 Washington Avenue North, Suite 7

Battle Creek, Michigan 49037-3084

(COMM) (269) 961-5779

(DSN) 661-5779

PUBLISHED BY DEFENSE LOGISTICS INFORMATION SERVICE, BATTLE CREEK, MI

This Federal Item Identification Guide for Supply Cataloging is issued under the authority of Department of Defense Instruction 5025.7.

The use of this publication is mandatory for US. Federal Activities participating in Federal Catalog System Operations.

BY ORDER OF THE DIRECTOR

/s/

Commander

Defense Logistics Information Service

Contents

GENERAL INFORMATION 1
MRC Index 6
INDEX OF APPROVED ITEM NAMES COVERED BY THIS FIIG 12
APPLICABILITY KEY INDEX 15
Body 27
SECTION: A 27
SECTION: B 41
SECTION: C 53
SECTION: D 62
SECTION: E 67
SECTION: F 86
SECTION: G 92
SECTION: STANDARD 99
SECTION: SUPPTECH 106
Reply Tables 110
Reference Drawing Groups 117
Technical Data Tables 128
FIIG Change List 165

GENERAL INFORMATION

1. Purpose and Scope

This Federal Item Identification Guide (FIIG) is a self-contained document for the collection, coding, transmittal, and retrieval of item characteristics and related supply management data for an item of supply for logistical use. This FIIG is to be used to describe items of supply identified by the index of approved item names appearing in this section.

2. Contents

This FIIG is comprised of the following:

Index of Approved Item Names Covered by this FIIG
Applicability Key Index
Section I - Item Characteristics Data Requirements
Section III - New text that should be here.
Appendix A - Reply Tables
Appendix B - Reference Drawing Groups (as applicable)
Appendix C - Technical Data Tables (as applicable)

a. Index of Approved Item Names Covered by this FIIG:

The index lists the approved item names with definitions and item name codes as they appear in Cataloging Handbook H6, applicable to this FIIG. In addition, each name entry is assigned an applicability key for use in relating the characteristics requirements in Section I to the specific item name.

b. Applicability Key Index:

The purpose of this index is to provide the user with a ready reference for determining the specific requirements which are applicable to a given approved item name. This index lists all requirements in sequence as they appear in the FIIG. The applicability of a Master Requirement Coded requirement is indicated by the column headed by the specific item name applicability key as follows:

(1) The letter "X" indicates the requirement must be answered for a full descriptive item.

(2) The letters "AR" indicate the requirement is to be answered as required by (1) instructional notes within the FIIG; (2) when the reply is predicated on replies to a related main requirement; or (3) when an asterisk (*) is used in conjunction with the applicability key column in Section I.

(3) A blank in the column indicates the requirement is not applicable to the specific item name.

c. Section I - Item Characteristics Data Requirements:

This section contains the physical and performance characteristics requirements needed to describe and identify an item of supply. These characteristics differentiate one item from all other items of supply and are to be used to meet the needs of all supported functions. This section is arranged in columns. Identification of each column and instructions pertinent thereto are as follows:

(1) Applicability Key:

The first column shows the applicability key(s) for each requirement. It indicates whether the requirement need be satisfied for the item being identified. "ALL" indicates that the requirement must be answered for all items covered by the FIIG. One or more alphabetic character(s) or group of one or more alphabetic characters indicates a response is required when describing items with an approved item name or names represented by the key(s). An asterisk (*) used in conjunction with any applicability key indicates that the characteristic stated in the requirement may not be applicable to all items covered by the FIIG.

(2) Master Requirement Codes (MRC):

A four-position code which is assigned to a FIIG requirement for identification of the requirement, cross-referencing requirements in the various sections and appendices of the FIIG, and for mechanized processing and retrieval of FIIG generated data. Absence of a MRC for a requirement indicates a lead-in to requirements with individual MRCs in Appendix B.

(a) The coding technique for providing MULTIPLE/OPTIONAL responses will not be used for a Section I requirement assigned Mode Code A or L that leads to Appendix B sketches with dimensional requirements.

(b) Identified Secondary Address Coding:

This technique is for extending the Master Requirement Code so that a unique address is provided for each application of the requirement in relation to the item and is authorized only as instructed within the requirement. Responses coded through this technique will always consist of the following: (1) Master Requirement Codes, (2) indicator code (a single numeric character determined by the number of positions contained), (3) identified secondary address code (1 to 3-digit alphabetic codes determined by the number of predicted replies), (4) the mode code, (5) the reply code and/or clear text response, and (6) end with a record separator (*). Steps (1) through (6) are repeated for each application of the requirement.

(c) AND/OR coding:

A technique for extending the Master Requirement Code to provide a distinctive address for multiple responses to the same requirement. Responses coded through this technique will always consist of (1) Master Requirement Code, (2) mode code, (3) the response or reply code (as instructed by the requirement), (4) a single dollar sign ($) for an OR condition, or a double dollar sign ($$) for an AND condition, (5) the mode code, (6) the response or reply code

(followed by conditions (4) through (6) for each of the multiple responses) and (7) end with a record separator (*). NOTE: Apply this technique only when instructed by the requirement sample reply (e.g.).

(3) Mode Code:

A one-position alphabetic code that specifies the manner in which a response will be prepared. Each requirement assigned a MRC is also assigned a mode code. Sample replies follow each FIIG requirement displaying the proper construction of a response for the assigned mode code. The response to a requirement will always be prepared in accordance with the assigned mode code and sample reply except in the following instances:

(a) Use of E Mode Code replies is not authorized. If a reply needed to describe an item is not listed in the applicable table, contact the FIIG Initiator.

(b) Mode Code K may not be used for any requirement unless instructed by the requirement instructions.

(4) Requirement:

This portion includes the characteristics data elements and data use identifiers required to identify and differentiate one item of supply from another, narrative definitions, and explanations as to use and method of expression. Instructions for coding and preparing replies are also provided.

(5) Reply Code:

A code that represents an established authorized reply to a requirement.

d. Section III - Supplementary Technical and Supply Management Data:

This section includes those characteristics requirements necessary to support specific logistics functions other than National Stock Number assignment.

e. Appendix A - Reply Tables:

Tables of authorized replies to requirements and reply codes when the tables are too lengthy for inclusion in Section I/III, when applicable.

f. Appendix B - Reference Drawings:

This appendix contains representative illustrations which portray specific variations of one or more generic characteristics. If reference drawings contain requirements pages to be used in conjunction with illustrations for dimensioning purposes, the requirements pages will contain Master Requirement Codes, mode codes, and a statement of the requirement. A response to requirements on a requirements page is necessary only for those Master Requirement Codes applicable to the illustration selected.

g. Appendix C - Technical Data Tables:

This appendix contains conversion charts and similar data pertinent to the requirements in Section I/III, when applicable.

3. Enter administrative MRC CLQL immediately following the last FIIG requirement reply, as instructed below:

MRC	Mode Code	Requirement	Example
CLQL	G	COLLOQUIAL NAME (common usage name by which an item is known)	CLQLGWOVEN WIRE CLOTH*

4. Special Instructions and Indicator Definitions

a. Measurements:

Unless otherwise indicated within a requirement example, enter all measurements in decimal form, carried to the nearest three decimal places, with a minimum of one digit preceding the decimal. For SI (metric), enter all measurements with a minimum of one digit before and after the decimal. For fraction to decimal conversion, see Appendix C.

b. Indicators:

A cross hatch (#) following an AIN, MRC, Reply Code or Drawing Number indicates for "ALL EXCEPT USA" use only.

5. Indexes

a. Index of Data Requirements

This index is arranged in alphabetic sequence by Master Requirement Code, cross-referenced to the applicable data requirement and page number(s).

b. Index of Approved Item Names

This index is arranged in alphabetic sequence referenced to Applicability Key.

c. Applicability Key Index

This index is arranged in Applicability Key Sequence.

6. Maintenance

Requests for revisions and other changes will be directed to:

[Page Break]

MRC Index

SECTION: A 27
NAME 27
ACKL 27
AYTS 27
AWCD 28
AWGE 28
AWKT 28
AWKW 28
AWKZ 28
AWWH 29
CWTS 29
ARGE 29
AJLX 30
BHSN 30
CSBH 30
FREQ 31
FAAZ 31
ABBB 31
AWCK 32
ADSM 32
AWCM 32
AWGF 33
AWGG 33
AAYE 33
AWGH 33
AWGJ 34
ARNF 34
AWGK 34
AWGL 35
AEUG 35
AWKR 35
AWKS 35
AWKX 36
AWKY 36
AWLA 36
AWLB 36
AWLC 37
AWLD 37
AWWG 37
ABHP 38
ABMK 38

AWWJ 39
AWWK 39
AWLE 39
AWLF 40
SECTION: B 41
NAME 41
ACKL 41
AAYE 41
AAXT # 41
AAYF 42
AAXM 42
ANDX 43
AWLG 43
AWLH 44
AAYS 44
AWLJ 44
AWLK 45
AWWM 45
AAXR 45
AWLL 46
AWCD 46
AWLM 46
AWLN 47
AWLP 47
AWXH 48
AWXJ 48
AKDJ 48
AWLX 49
AHZX 49
AWLY 49
CSBH 50
FREQ 50
FAAZ 50
AEQC 51
ALBY 51
AKCV 51
SECTION: C 53
NAME 53
ABMK 53
ADAV 53
ABKW 54
ABFY 54
ADTV 55
AWLZ 55

AWGF 55
CWMP 56
CWMQ 56
AWGJ 56
AWLQ 57
AWLR 57
ACZV 57
AWLS 57
AWLT 57
AWLW 57
AWMA 58
AWMB 58
AHZX 58
AEQC 59
ACDC 59
ELEC 59
FREQ 60
FAAZ 60
SECTION: D 62
NAME 62
MATL 62
SURF 62
ATQR 62
AWMC 63
ADQF 63
ADQZ 63
STYL 64
THDS 64
ABHP 65
AKYD 65
SECTION: E 67
NAME 67
ADSM 67
ACKL 67
AWXK 67
AWXL 68
AWMD 68
ABHP 68
AWKS 69
MATL 69
AWPR 69
AWPS 70
STYL 70
ACSV 71

AJES 71
ABKV 72
AWME 73
ACSU 73
AWMF 73
ABUJ 74
AWMG 74
AWMH 75
AJYP 75
AAJD 75
AAJE 76
AAJF 76
AJFY 76
AJFZ 77
AHSJ 77
AWMJ 78
ABKU 78
ADML 79
ADMM 79
ADMN 80
ADME 80
AWMK 81
AWML 81
AGSX 82
ASPS 82
AWMM 83
AWMN 83
AWMP 83
AWMQ 84
AWMR 84
AKYD 85
SECTION: F 86
NAME 86
SHPE 86
ALBY 86
AYTS 87
AWCD 87
CWPT 87
AAYE 87
AAXT # 88
AWGJ 88
CWPW 88
AAJU 89
AAJV 89

AAJT 89
CWQS 90
CWRC 90
CWRN 90
CWSD 91
SECTION: G 92
NAME 92
ACKL 92
AXGY 92
ABHP 92
ABKW 93
ADNM 93
CHKY 94
BJNW 94
BJNX 95
BJMC 95
AZSB 96
ATSZ 96
AKDJ 96
AWLX 96
ACDC 96
CSBH 97
FREQ 97
FAAZ 97
AKYD 98
SECTION: STANDARD 99
CBBL 99
FEAT 99
TEST 99
SPCL 100
ZZZK 101
ZZZT 102
ZZZW 102
ZZZX 102
ZZZY 103
CRTL 103
PRPY 103
ENAC 104
ELRN 104
NHCF 105
ELCD 105
SECTION: SUPPTECH 106
AFJK 106
SUPP 106

AGAV 106
ZZZV 106
HZRD 107
CXCY 107

INDEX OF APPROVED ITEM NAMES COVERED BY THIS FIIG

Approved Item Name	INC	App Key
ACCUMULATOR, REFRIGERANT	36525	EB

A device used on the low pressure side of a refrigerant compressor to prevent excess liquid coolant from flowing into the suction line and into the compressor. Excludes RECEIVER, LIQUID REFRIGERANT.

BONNET, CONDENSER, REFRIGERATION	42037	DB

An item mounted on the housing of a CONDENSER, REFRIGERATION. It can be used as a deflector for changing the direction of flow. Inlet and outlet connections for liquids may be included.

CHARGING LINE, REFRIGERANT CHARGING AND TESTING MANIFOLD	21515	DB

A flexible item, with fittings and metal tube extensions, which is specifically designed for a MANIFOLD, CHARGING AND TESTING REFRIGERANT and is used for charging, testing, and purging refrigeration systems.

CHARGING UNIT, COOLING SYSTEM	39984	GA

A self-contained cabinet unit which may be mounted on a truck, trailer, or on a skid, it may also be a free standing unit on casters. It is designed to perform the functions of recharging the refrigerant of cooling system. It may be used with the air cycle type used in aircraft, or the vapor cycle type applicable to ground or aerospace equipment.

CHILLER, WATER, REFRIGERATING	13452	AA

An item of equipment, whose main elements are an arrangement of tubes within a shell, through which the flow of water and refrigerant is maintained in such a heat transfer relationship that the water is chilled. Excludes CHILLED WATER UNIT, BAKERY.

CHOKE, AIR CONDITIONER-REFRIGERATION SYSTEM	42036	DB

An item installed in an air conditioner or refrigeration system. It is connected with hinges, clamps, gate valves or other pivoted mounting device types and allows opening and closing of cabinets, ducts and pipes. The choke is automatically or power operated.

CONDENSER COIL, REFRIGERATION	36882	FB

An item generally consisting of one or more turns of tubing or similar material which receives high pressure gas at temperatures above that of the cooling medium and passes latent hear from the refrigerant gas, causing it to liquefy. This item does not include the housing and fan(s).

Approved Item Name	INC	App Key
CONDENSER, REFRIGERATION	36880	AB

A self-contained heat transfer device which receives high pressure gas at temperatures above that of the cooling medium, to which the device passes latent heat from the refrigerant gas, thereby causing it to liquefy.

CONDENSING UNIT, REFRIGERATING	07883	BA

An assembly consisting of a compressor, condenser, drive, driving component and pertinent controls, which has the function of converting low pressure vapor into high pressure liquid.

COOLER UNIT, AIR	11361	CA

A unit comprising a fin and tube heat transfer element, filters and may or may not have a motor driven fan, enclosed in a casing for the purpose of cooling and removing moisture from the air in a space where the unit is installed. It may include electric heater and/or electrostatic precipitator. Excludes units containing compressor, condenser and means for introducing air from outside sources.

COOLING UNIT, STEREOPLOTTER PROJECTOR	17851	CB
CYLINDER, CHARGING, REFRIGERANT	42590	EC

A portable measuring cylinder with a transparent liquid level indicator. It allows the accurate measurement and transfer of refrigerant into a system. It is equipped with a pressure gage and valve(s). It may have an electric heating element to speed up evaporation and maintain pressure in the cylinder.

EVAPORATOR COIL, REFRIGERATION	36881	FA

A direct expansion refrigerating cooling element where the liquid refrigerant boils or evaporates and absorbs heat.

HEAT EXCHANGER, AIR TO AIR, AIRCRAFT	61419	CA

A heat transfer device designed to lower compressed air temperature to an acceptable level by passing it through tubes and flowing ducked ram air over the tubes, heat of the compressed air is transferred to the ram air reducing the temperature. Consists of a sheet metal housing with ram air connection(s) with or without ducts, a tubular type core, inlet and outlet ports. May contain a cutoff valve. Normally used in aircraft air conditioning and/or air induction systems.

HEAT EXCHANGER, AIR TO WATER, AIRCRAFT	61420	CA

A heat transfer device designed to lower compressed air temperature to an acceptable level by passing it through an exchanger core immersed in a tank of water. The heat of the air is absorbed by the water causing the water to boil and carry the heat off as steam reducing the air temperature. May contain a water tank and/or a collector or condenser section turning a portion of the steam back into water conserving the water supply. Contains air inlet and outlet ports. May incorporate an air bypass outlet and a steam vent port. Normally used in aircraft air conditioning systems.

Approved Item Name	INC	App Key
HEAT INTERCHANGER, REFRIGERANT	12791	AC

An apparatus designed to lower the temperature of the liquid refrigerant and raise the temperature of the suction vapor by permitting the transfer of heat from both through the walls of the separating chambers

MANIFOLD, CHARGING AND TESTING, REFRIGERANT	13148	DA

An item consisting of one or more manually controlled valves, service, and cross sections. It is specifically designed for use in refrigeration or air conditioning system to set expansion valves, purge air or overcharge out of the system, and the like.

RECEIVER, LIQUID REFRIGERANT	15767	EA

An item used on the high pressure side of a refrigerant compressor as a reservoir for the liquid refrigerant and provides a positive seal to prevent the escape of incandesced gases to the expansion valves. Excludes ACCUMULATOR, REFRIGERANT.

APPLICABILITY KEY INDEX

	AA	AB	AC
NAME	X	X	X
ACKL	X	X	
AYTS		X	
AWCD	X	X	
AWGE		AR	
AWKT	X	AR	
AWKW	X	AR	
AWKZ	X	AR	
AWWH	X	AR	
CWTS		AR	
ARGE		AR	
AJLX		AR	
BHSN		AR	
CSBH		AR	
FREQ		AR	
FAAZ		AR	
ABBB		AR	
AWCK	X		
ADSM	X		
AWCM	AR		
AWGF	X		
AWGG		X	
AAYE		X	
AWGH	X		
AWGJ	X	AR	X
ARNF		AR	
AWGK		AR	
AWGL		X	X
AEUG	X	AR	X
AWKR	X	AR	
AWKS	X	AR	X
AWKX	X	X	
AWKY	X	X	
AWLA	X	X	
AWLB	X	X	
AWLC	X	X	
AWLD	X	X	
AWWG	X	X	
ABHP	X	X	X
ABMK	X	X	
AWWJ			X
AWWK			X
AWLE			AR
AWLF			AR
CBBL	AR	AR	AR
FEAT	AR	AR	AR
TEST	AR	AR	AR
SPCL	AR	AR	AR

ZZZK	AR	AR	AR
ZZZT	AR	AR	AR
ZZZW	AR	AR	AR
ZZZX	AR	AR	AR
ZZZY	AR	AR	AR
CRTL	AR	AR	AR
PRPY	AR	AR	AR
ENAC	AR	AR	AR
ELRN	AR	AR	AR
NHCF	AR	AR	AR
ELCD	AR	AR	AR
AFJK	AR	AR	AR
SUPP	AR	AR	AR
AGAV	AR	AR	AR
ZZZV	AR	AR	AR
HZRD	AR	AR	AR
CXCY	AR	AR	AR

	BA
NAME	X
ACKL	X
AAYE	X
AAXT #	AR
AAYF	X
AAXM	X
ANDX	X
AWLG	X
AWLH	X
AAYS	X
AWLJ	X
AWLK	X
AWWM	AR
AAXR	X
AWLL	X
AWCD	AR
AWLM	AR
AWLN	AR
AWLP	X
AWXH	AR
AWXJ	AR
AKDJ	X
AWLX	AR
AHZX	AR
AWLY	AR
ACDC	AR
ELEC	AR
FREQ	AR
FAAZ	AR
AEQC	AR
ALBY	AR
AKCV	X
CBBL	AR
FEAT	AR
TEST	AR
SPCL	AR
ZZZK	AR
ZZZT	AR
ZZZW	AR
ZZZX	AR
ZZZY	AR
CRTL	AR
PRPY	AR
ENAC	AR
ELRN	AR
NHCF	AR
ELCD	AR
AFJK	AR
SUPP	AR
AGAV	AR
ZZZV	AR
HZRD	AR
CXCY	AR

	CA	CB
NAME	X	X
ABMK	AR	AR
ADAV	AR	AR
ABKW	AR	AR
ABFY	AR	AR
ADTV	X	X
AWLZ	X	X
AWGF	AR	AR
CWMP	AR	AR
CWMQ	AR	AR
AWGJ	X	
AWLQ	X	
AWLR	X	
ACZV	X	X
AWLS	AR	AR
AWLT	AR	AR
AWLW	AR	AR
AWMA	AR	AR
AWMB	AR	AR
AHZX	AR	AR
AEQC	AR	AR
ACDC	AR	AR
ELEC	AR	AR
FREQ	AR	AR
FAAZ	AR	AR
CBBL	AR	AR
FEAT	AR	AR
TEST	AR	AR
SPCL	AR	AR
ZZZK	AR	AR
ZZZT	AR	AR
ZZZW	AR	AR
ZZZX	AR	AR
ZZZY	AR	AR
CRTL	AR	AR
PRPY	AR	AR
ENAC	AR	AR
ELRN	AR	AR
NHCF	AR	AR
ELCD	AR	AR
AFJK	AR	AR
SUPP	AR	AR
AGAV	AR	AR
ZZZV	AR	AR
HZRD	AR	AR
CXCY	AR	AR

	DA	DB
NAME	X	X
MATL	X	X
SURF	X	
ATQR	X	
AWMC	X	
ADQF	AR	
ADQZ	X	
STYL	X	
THDS	AR	
ABHP		X
AKYD		AR
CBBL	AR	AR
FEAT	AR	AR
TEST	AR	AR
SPCL	AR	AR
ZZZK	AR	AR
ZZZT	AR	AR
ZZZW	AR	AR
ZZZX	AR	AR
ZZZY	AR	AR
CRTL	AR	AR
PRPY	AR	AR
ENAC	AR	AR
ELRN	AR	AR
NHCF	AR	AR
ELCD	AR	AR
AFJK	AR	AR
SUPP	AR	AR
AGAV	AR	AR
ZZZV	AR	AR
HZRD	AR	AR
CXCY	AR	AR

	EA	EB	EC
NAME	X	X	X
ADSM	X	X	
ACKL	X	X	X
AWXK	AR	AR	X
AWXL	AR	AR	
AWMD	AR	AR	
ABHP	X	X	AR
AWKS	X	X	
MATL	X	X	
AWPR	X	X	
AWPS	AR	AR	
STYL	AR	AR	
ACSV	AR	AR	
AJES	AR	AR	
ABKV	AR	AR	
AWME	AR	AR	
ACSU	AR	AR	
AWMF	AR	AR	
ABUJ	AR	AR	
AWMG	AR	AR	
AWMH	AR	AR	
AJYP	AR	AR	
AAJD	AR	AR	
AAJE	AR	AR	
AAJF	AR	AR	
AJFY	AR	AR	
AJFZ	AR	AR	
AHSJ	AR	AR	
AWMJ	AR	AR	
ABKU	AR	AR	
ADML	AR	AR	
ADMM	AR	AR	
ADMN	AR	AR	
ADME	AR	AR	
AWMK	AR	AR	
AWML	AR	AR	
AGSX	AR	AR	
ASPS	X		
AWMM	X		
AWMN	X		
AWMP	X		
AWMQ	X		
AWMR	AR		
AKYD			AR
CBBL	AR	AR	AR
FEAT	AR	AR	AR
TEST	AR	AR	AR
SPCL	AR	AR	AR
ZZZK	AR	AR	AR
ZZZT	AR	AR	AR
ZZZW	AR	AR	AR
ZZZX	AR	AR	AR
ZZZY	AR	AR	AR

CRTL	AR	AR	AR
PRPY	AR	AR	AR
ENAC	AR	AR	AR
ELRN	AR	AR	AR
NHCF	AR	AR	AR
ELCD	AR	AR	AR
AFJK	AR	AR	AR
SUPP	AR	AR	AR
AGAV	AR	AR	AR
ZZZV	AR	AR	AR
HZRD	AR	AR	AR
CXCY	AR	AR	AR

	FA	FB
NAME	X	X
SHPE	X	X
ALBY	X	X
AYTS	X	X
AWCD	AR	AR
CWPT		X
AAYE	X	
AAXT #	X	
AWGJ	X	X
CWPW	AR	AR
AAJU	X	X
AAJV	X	X
AAJT	X	X
CWQS	AR	AR
CWRC	AR	AR
CWRN	AR	AR
CWSD	AR	AR
CBBL	AR	AR
FEAT	AR	AR
TEST	AR	AR
SPCL	AR	AR
ZZZK	AR	AR
ZZZT	AR	AR
ZZZW	AR	AR
ZZZX	AR	AR
ZZZY	AR	AR
CRTL	AR	AR
PRPY	AR	AR
ENAC	AR	AR
ELRN	AR	AR
NHCF	AR	AR
ELCD	AR	AR
AFJK	AR	AR
SUPP	AR	AR
AGAV	AR	AR
ZZZV	AR	AR
HZRD	AR	AR
CXCY	AR	AR

	GA
NAME	X
ACKL	X
AXGY	X
ABHP	AR
ABKW	AR
ADNM	AR
CHKY	AR
BJNW	AR
BJNX	AR
BJMC	AR
AZSB	AR
ATSZ	X
AKDJ	AR
AWLX	AR
ACDC	AR
CSBH	AR
FREQ	AR
FAAZ	AR
AKYD	AR
CBBL	AR
FEAT	AR
TEST	AR
SPCL	AR
ZZZK	AR
ZZZT	AR
ZZZW	AR
ZZZX	AR
ZZZY	AR
CRTL	AR
PRPY	AR
ENAC	AR
ELRN	AR
NHCF	AR
ELCD	AR
AFJK	AR
SUPP	AR
AGAV	AR
ZZZV	AR
HZRD	AR
CXCY	AR

[Page Break]

Body

SECTION: A

APP Key	MRC	Mode Code	Requirements
ALL			
	NAME	D	ITEM NAME

Definition: A NOUN, WITH OR WITHOUT MODIFIERS, BY WHICH AN ITEM OF SUPPLY IS KNOWN.

Reply Instructions: Enter the applicable Item Name Code from the index appearing in the General Information Section. (e.g., NAMED13452*)

AA, AB

ACKL	D	MEDIA FOR WHICH DESIGNED

Definition: THE TYPE OF SERVICE WITH WHICH THE ITEM IS DESIGNED TO BE USED.

Reply Instructions: Enter the applicable Reply Code from Appendix A , Table 1. (e.g., ACKLDCR*; ACKLDCR$$DCS*; ACKLDCR$DCS*)

AB

AYTS	D	COOLING TYPE

Definition: INDICATES THE TYPE OF COOLING.

Reply Instructions: Enter the applicable Reply Code from the table below. (e.g., AYTSDAAB*)

REPLY CODE	REPLY (AB75)
AAB	AIR
ACN	WATER

NOTE FOR APPLICABILITY KEY AB: IF REPLY CODE ACN IS ANSWERED FOR MRC AYTS, REPLY TO MRCS AWCD, AWGE, AWKT, AWKW, AWKZ, AWWH, CWTS AND ARGE. IF REPLY CODE AAB IS ANSWERED FOR MRC AYTS, REPLY TO MRCS AJLX, BHSN, CSBH AND ABBB.

APP Key	MRC	Mode Code	Requirements

AA, AB (See Note Above)

AWCD D WATER FOR WHICH DESIGNED

Definition: THE TYPE OF WATER WITH WHICH THE ITEM IS DESIGNED TO BE USED.

Reply Instructions: Enter the applicable Reply Code from the table below. (e.g., AWCDDKR*; AWCDDKR$DKS*)

REPLY CODE	REPLY (AB75)
KR	FRESH
KS	SALT

AB* (See Note Preceding MRC AWCD)

AWGE A PASS QUANTITY

Definition: THE NUMBER OF PASSES PROVIDED.

Reply Instructions: Enter the quantity. (e.g., AWGEA4*)

AA, AB* (See Note Preceding MRC AWCD)

AWKT A WATER CONNECTION QUANTITY

Definition: THE NUMBER OF WATER CONNECTIONS PROVIDED.

Reply Instructions: Enter the quantity. (e.g., AWKTA2*)

AA, AB* (See Note Preceding MRC AWCD)

AWKW D WATER CONNECTION TYPE

Definition: INDICATES THE TYPE OF WATER CONNECTION(S).

Reply Instructions: Enter the applicable Reply Code from Appendix A , Table 3. (e.g., AWKWDBF*; AWKWDBQ$DBR*)

AA, AB* (See Note Preceding MRC AWCD)

AWKZ G WATER CONNECTION SIZE

Definition: DESIGNATES THE SIZE OF THE WATER CONNECTION.

APP Key	MRC	Mode Code	Requirements

Reply Instructions: Enter the reply in clear text. (e.g., AWKZG1 IN. OD*; AWKZG1 IN. OD, 1 1/2 IN. OD*)

AA, AB* (See Note Preceding MRC AWCD)

AWWH J WATER SIDE TEST MINIMUM PRESSURE

Definition: THE MAXIMUM INTERNAL PRESSURE, DETERMINED BY DESTRUCTION TESTS AT WHICH THE ITEM CAN BE EXPECTED TO RUPTURE.

Reply Instructions: Enter the applicable Reply Code from the table below, followed by the numeric value. (e.g., AWWHJBB225.0*; AWWHJAV3199.5*)

REPLY CODE	REPLY (AG20)
AV	KILOGRAMS PER SQUARE CENTIMETER
BB	POUNDS PER SQUARE INCH

AB* (See Note Preceding MRC AWCD)

CWTS J WATER FLOW RATE

Definition: THE RATED CAPACITY OF WATER FLOW MOVED THROUGH THE ITEM.

Reply Instructions: Enter the applicable Reply Code from the table below, followed by the numeric value. (e.g., CWTSJCQ25.0*; CWTSJCR265.0*)

REPLY CODE	REPLY (AG67)
CQ	GALLONS PER MINUTE
CR	LITERS PER MINUTE

AB* (See Note Preceding MRC AWCD)

ARGE D HEAD MATERIAL

Definition: THE ELEMENT, COMPOUND, OR MIXTURE OF WHICH THE HEAD IS FABRICATED, EXCLUDING ANY SURFACE TREATMENT.

Reply Instructions: Enter the applicable Reply Code from Appendix A , Table 2. (e.g., ARGEDBR0000*; ARGEDBR0000$$DST0000*; ARGEDBR0000$DST0000*)

APP Key	MRC	Mode Code	Requirements

AB* (See Note Preceding MRC AWCD)

AJLX	A	FAN QUANTITY

Definition: THE NUMBER OF INDIVIDUAL FANS CONTAINED IN THE ITEM.

Reply Instructions: Enter the quantity. (e.g., AJLXA2*; AJLXA1$A2*)

AB* (See Note Preceding MRC AWCD)

BHSN	D	DRAFT DIRECTION

Definition: THE DIRECTION OF THE AIR FLOW.

Reply Instructions: Enter the applicable Reply Code from the table below. (e.g., BHSNDAE*; BHSNDAE$$DAF*; BHSNDAE$DAF*)

REPLY CODE	REPLY (AJ69)
AD	AT RIGHT ANGLES
AE	DOWN
AF	HORIZONTAL
AH	LONGITUDINAL
AB	PARALLEL
AC	PERPENDICULAR
AG	UP

AB* (See Note Preceding MRC AWCD)

CSBH	J	VOLTAGE IN VOLTS AND CURRENT TYPE

Definition: THE TOTAL ELECTRICAL VOLTAGE, EXPRESSED IN VOLTS, AND THE TYPE OF CURRENT WHETHER ALTERNATING OR DIRECT.

Reply Instructions: Enter the applicable Reply Code from the table below, followed by the numeric value. (e.g., CSBHJAC6.5*; CSBHJAC6.5$$JAC7.0*; CSBHJAC6.5$JDC7.0*)

REPLY CODE	REPLY (AN87)
AC	AC
DC	DC

NOTE FOR FREQ AND FAAZ: IF REPLY CODE AC IS ANSWERED FOR MRC CSBH, REPLY TO MRCS FREQ AND FAAZ.

APP Key	MRC	Mode Code	Requirements
AB* (See Note Above)			
	FREQ	B	FREQUENCY IN HERTZ

Definition: THE CYCLES PER SECOND (HERTZ) OF THE ALTERNATING CURRENT.

Reply Instructions: Enter the numeric value. (e.g., FREQB60.0*; FREQB50.0$B60.0*)

AB* (See Note Preceding MRC FREQ)

FAAZ	D	PHASE

Definition: THE NUMBER OF ALTERNATING CURRENT PHASES.

Reply Instructions: Enter the applicable Reply Code from the table below. (e.g., FAAZDA*; FAAZDB$DC*)

REPLY CODE	REPLY (AD02)
A	SINGLE
C	THREE
B	TWO

AB* (See Note Preceding MRC AWCD)

ABBB	D	SPEED ADJUSTMENTS

Definition: THE DIFFERENT SPEEDS AT WHICH THE ITEM MAY BE OPERATED.

Reply Instructions: Enter the applicable Reply Code from the table below. (e.g., ABBBDB*; ABBBDE$DK*)

REPLY CODE	REPLY (AB03)
E	FIVE SPEED
D	FOUR SPEED
A	SINGLE SPEED
F	SIX SPEED
C	THREE SPEED
B	TWO SPEED
K	0 TO FULL SPEED (rheostat regulated)

APP Key	MRC	Mode Code	Requirements
AA			
	AWCK	D	REFRIGERANT OPERATING LOCATION

Definition: INDICATES THE OPERATING LOCATION OF THE REFRIGERANT.

Reply Instructions: Enter the applicable Reply Code from the table below. (e.g., AWCKDANT*)

REPLY CODE	REPLY (AJ91)
ANT	IN SHELL
ANW	IN TUBES

AA

ADSM	D	MOUNTING POSITION

Definition: THE INSTALLED POSITION FOR WHICH THE ITEM IS DESIGNED.

Reply Instructions: Enter the applicable Reply Code from the table below. (e.g., ADSMDB*; ADSMDB$DD*)

REPLY CODE	REPLY (AC60)
B	HORIZONTAL
D	VERTICAL

AA*

AWCM	J	WATER STORAGE CAPACITY

Definition: THE WATER STORAGE CAPACITY OF THE ITEM.

Reply Instructions: Enter the applicable Reply Code from the table below, followed by the numeric value. (e.g., AWCMJAF65.0*; AWCMJCC246.0*)

REPLY CODE	REPLY (AG67)
AF	GALLONS
CC	LITERS

AA

APP Key	MRC	Mode Code	Requirements
	AWGF	J	EFFECTIVE COOLING AREA

Definition: THE AMOUNT OF EFFECTIVE COOLING AREA.

Reply Instructions: Enter the applicable Reply Code from the table below, followed by the numeric value. (e.g., AWGFJF101.000*; AWGFJM10.4*)

REPLY CODE	REPLY (AC51)
F	SQUARE FEET
M	SQUARE METERS

AB

	AWGG	J	CONDENSING SURFACE AREA

Definition: THE AMOUNT OF CONDENSING SURFACE AREA.

Reply Instructions: Enter the applicable Reply Code from the table below, followed by the numeric value. (e.g., AWGGJF185.000*; AWGGJM17.2*)

REPLY CODE	REPLY (AC51)
F	SQUARE FEET
M	SQUARE METERS

AB

	AAYE	B	REFRIGERATION FLOW RATE IN TONS PER HOUR

Definition: THE REFRIGERATION CAPACITY OF THE ITEM AS RATED BY INDUSTRY, EXPRESSED IN TONS PER HOUR.

Reply Instructions: Enter the numeric value. (e.g., AAYEB0.500*; AAYEB150.000*)

For items that do not require a rating, change the Mode Code to K and enter Reply Code N. (e.g., AAYEKN*)

If rated in British Thermal Units, convert to tons of refrigeration. 12000 British Thermal Units per hour equal 1 ton of refrigeration.

AA

	AWGH	D	TUBE TYPE

APP Key	MRC	Mode Code	Requirements

Definition: INDICATES THE TYPE OF TUBE PROVIDED.

Reply Instructions: Enter the applicable Reply Code from the table below. (e.g., AWGHDEJ*; AWGHDBD$DEJ*)

REPLY CODE	REPLY (AA62)
BD	COILED
EJ	STRAIGHT

AA, AB*, AC

AWGJ D TUBE MATERIAL

Definition: THE ELEMENT, COMPOUND, OR MIXTURE OF WHICH THE TUBE IS FABRICATED, EXCLUDING ANY SURFACE TREATMENT.

Reply Instructions: Enter the applicable Reply Code from Appendix A , Table 2. (e.g., AWGJDCU0000*; AWGJDCU0000$$DST0000*; AWGJDCU0000$DST0000*)

AB*

ARNF A TUBE QUANTITY

Definition: THE NUMBER OF TUBES INCLUDED ON THE ITEM.

Reply Instructions: Enter the quantity. (e.g., ARNFA132*)

AB*

AWGK J TUBE EFFECTIVE LENGTH

Definition: A MEASUREMENT OF THE LONGEST DIMENSION OF A TUBE BETWEEN THE INSIDE FACES OF THE TUBE SHEETS, IN DISTINCTION FROM WIDTH.

Reply Instructions: Enter the applicable Reply Code from the table below, followed by the numeric value. (e.g., AWGKJF8.400*; AWGKJM2.5*)

REPLY CODE	REPLY (AA05)
F	FEET
A	INCHES
M	METERS
L	MILLIMETERS

APP Key	MRC	Mode Code	Requirements

AB, AC

AWGL D TUBE FIN

Definition: AN INDICATION OF WHETHER OR NOT THE TUBE(S) IS PROVIDED WITH FINS.

Reply Instructions: Enter the applicable Reply Code from the table below. (e.g., AWGLDB*)

REPLY CODE	REPLY (AB22)
C	NOT PROVIDED
B	PROVIDED

AA, AB*, AC

AEUG D SHELL MATERIAL

Definition: THE ELEMENT, COMPOUND, OR MIXTURE OF WHICH THE SHELL IS FABRICATED.

Reply Instructions: Enter the applicable Reply Code from Appendix A , Table 2. (e.g., AEUGDBR0000*; AEUGDBR0000$$DST0000*; AEUGDBR0000$DST0000*)

AA, AB*

AWKR J SHELL LENGTH

Definition: A MEASUREMENT OF THE LONGEST DIMENSION OF THE SHELL, IN DISTINCTION FROM WIDTH.

Reply Instructions: Enter the applicable Reply Code from the table below, followed by the numeric value, excluding heads. (e.g., AWKRJF8.000*; AWKRJM2.4*)

REPLY CODE	REPLY (AA05)
F	FEET
A	INCHES
M	METERS
L	MILLIMETERS

AA, AB*, AC

AWKS J SHELL OUTSIDE DIAMETER

APP Key	MRC	Mode Code	Requirements

Definition: THE LENGTH OF A STRAIGHT LINE WHICH PASSES THROUGH THE CENTER OF THE SHELL, AND TERMINATES AT THE OUTSIDE CIRCUMFERENCE.

Reply Instructions: Enter the applicable Reply Code from the table below, followed by the numeric value. (e.g., AWKSJA8.625*; AWKSJL219.0*)

REPLY CODE	REPLY (AA05)
A	INCHES
L	MILLIMETERS

AA, AB

AWKX A REFRIGERANT INLET CONNECTION QUANTITY

Definition: THE NUMBER OF REFRIGERANT INLET CONNECTIONS PROVIDED.

Reply Instructions: Enter the quantity. (e.g., AWKXA1*)

AA, AB

AWKY D REFRIGERANT INLET CONNECTION TYPE

Definition: INDICATES THE TYPE OF REFRIGERANT INLET CONNECTION(S).

Reply Instructions: Enter the applicable Reply Code from Appendix A , Table 3. (e.g., AWKYDBX*; AWKYDBQ$DBR*)

AA, AB

AWLA G REFRIGERANT INLET CONNECTION SIZE

Definition: DESIGNATES THE SIZE OF THE REFRIGERANT INLET CONNECTION.

Reply Instructions: Enter the reply in clear text. (e.g., AWLAG3/4 IN. IPS*; AWLAG3/4 IN. IPS or 1 IN. IPS*)

AA, AB

AWLB A REFRIGERANT OUTLET CONNECTION

APP Key	MRC	Mode Code	Requirements
			QUANTITY

Definition: THE NUMBER OF REFRIGERANT OUTLET CONNECTIONS PROVIDED.

Reply Instructions: Enter the quantity. (e.g., AWLBA1*)

AA, AB

AWLC	D	REFRIGERANT OUTLET CONNECTION TYPE

Definition: INDICATES THE TYPE OF REFRIGERANT OUTLET CONNECTION(S).

Reply Instructions: Enter the applicable Reply Code from Appendix A , Table 3. (e.g., AWLCDBX*; AWLCDBQ$DBS*)

AA, AB

AWLD	G	REFRIGERANT OUTLET CONNECTION SIZE

Definition: DESIGNATES THE SIZE OF THE REFRIGERANT OUTLET CONNECTION.

Reply Instructions: Enter the reply in clear text. (e.g., AWLDG1 IN. OD*; AWLDG1 IN. OD, OR 2 IN. OD*)

AA, AB

AWWG	J	REFRIGERANT SIDE TEST MINIMUM PRESSURE

Definition: THE MAXIMUM INTERNAL PRESSURE, DETERMINED BY DESTRUCTION TESTS AT WHICH THE ITEM CAN BE EXPECTED TO RUPTURE.

Reply Instructions: Enter the applicable Reply Code from the table below, followed by the numeric value. (e.g., AWWGJBB225.0*; AWWGJAV3199.5*)

REPLY CODE	REPLY (AG20)
AV	KILOGRAMS PER SQUARE CENTIMETER
BB	POUNDS PER SQUARE INCH

APP Key	MRC	Mode Code	Requirements
ALL			
	ABHP	J	OVERALL LENGTH

Definition: THE DIMENSION MEASURED ALONG THE LONGITUDINAL AXIS WITH TERMINATED POINTS AT THE EXTREME ENDS OF THE ITEM.

Reply Instructions: Enter the applicable Reply Codes from Tables 1 and 2 below, followed by the numeric value. (e.g., ABHPJAA8.000*; ABHPJLA203.2*; ABHPJAB10.500$$JAC11.000*)

Table 1

REPLY CODE	REPLY (AA05)
F	FEET
A	INCHES
M	METERS
L	MILLIMETERS

Table 2

REPLY CODE	REPLY (AC20)
A	NOMINAL
B	MINIMUM
C	MAXIMUM

AA, AB

ABMK	J	OVERALL WIDTH

Definition: AN OVERALL MEASUREMENT TAKEN AT RIGHT ANGLES TO THE LENGTH OF AN ITEM, IN DISTINCTION FROM THICKNESS.

Reply Instructions: Enter the applicable Reply Codes from Tables 1 and 2 below, followed by the numeric value. (e.g., ABMKJAA2.500*; ABMKJLA63.5*; ABMKJAB2.500$$JAC3.000*)

Table 1

REPLY CODE	REPLY (AA05)
F	FEET
A	INCHES
M	METERS
L	MILLIMETERS

Table 2

REPLY CODE	REPLY (AC20)
A	NOMINAL

APP Key	MRC	Mode Code	Requirements
		B	MINIMUM
		C	MAXIMUM

AC

AWWJ J LIQUID SIDE HEAT TRANSFER SURFACE

Definition: THE AMOUNT OF HEAT TRANSFER SURFACE ON THE LIQUID SIDE.

Reply Instructions: Enter the applicable Reply Code from the table below, followed by the numeric value. (e.g., AWWJJF2.330*; AWWJJM0.2*)

REPLY CODE	REPLY (AC51)
F	SQUARE FEET
A	SQUARE INCHES
M	SQUARE METERS

AC

AWWK J GAS SIDE HEAT TRANSFER SURFACE

Definition: THE AMOUNT OF HEAT TRANSFER SURFACE ON THE GAS SIDE.

Reply Instructions: Enter the applicable Reply Code from the table below, followed by the numeric value. (e.g., AWWKJF28.300*; AWWKJM2.6*)

REPLY CODE	REPLY (AC51)
F	SQUARE FEET
A	SQUARE INCHES
M	SQUARE METERS

AC*

AWLE D GAS CONNECTION TYPE

Definition: INDICATES THE TYPE OF GAS CONNECTION.

Reply Instructions: Enter the applicable Reply Code from Appendix A , Table 3. (e.g., AWLEDCB*; AWLEDBQ$DBR*)

AC*

APP Key	MRC	Mode Code	Requirements
	AWLF	G	GAS CONNECTION SIZE

Definition: DESIGNATES THE SIZE OF THE GAS CONNECTION.

Reply Instructions: Enter the reply in clear text. (e.g., AWLFG3/4 IN. IPS; AWLFG 3/4 IN. IPS OR 1 IN. IPS*)

SECTION: B

APP Key	MRC	Mode Code	Requirements
ALL			
	NAME	D	ITEM NAME

Definition: A NOUN, WITH OR WITHOUT MODIFIERS, BY WHICH AN ITEM OF SUPPLY IS KNOWN.

Reply Instructions: Enter the applicable Item Name Code from the index appearing in the General Information Section. (e.g., NAMED07883*)

ALL

ACKL	D	MEDIA FOR WHICH DESIGNED

Definition: THE TYPE OF SERVICE WITH WHICH THE ITEM IS DESIGNED TO BE USED.

Reply Instructions: Enter the applicable Reply Code from Appendix A , Table 1. (e.g., ACKLDAF*; ACKLDCR$$DCS*; ACKLDCR$DCS*)

ALL

AAYE	B	REFRIGERATION FLOW RATE IN TONS PER HOUR

Definition: THE REFRIGERATION CAPACITY OF THE ITEM AS RATED BY INDUSTRY, EXPRESSED IN TONS PER HOUR.

Reply Instructions: Enter the numeric value. (e.g., AAYEB150.000*)

For items that do not require a rating, change the Mode Code to K and enter Reply Code N. (e.g., AAYEKN*)

If rated in British Thermal Units, convert to tons of refrigeration. 12000 British Thermal Units per hour equal 1 ton of refrigeration.

ALL *

AAXT #	J	COOLING SYSTEM COOLANT FLOW RATE

Definition: THE AMOUNT OF COOLANT NECESSARY TO MAINTAIN THE REQUIRED OPERATING TEMPERATURE OF THE ITEM.

Reply Instructions: Enter the applicable Reply Code from the table below, followed by the numeric value. (e.g., AAXTJC3.0*)

APP Key	MRC	Mode Code	Requirements

REPLY CODE	REPLY (AC64)
C	CUBIC METERS PER MINUTE
E	LITERS PER MINUTE

ALL

AAYF J SUCTION PRESSURE

Definition: THE PRESSURE OF THE GAS AFTER IT HAS PASSED THROUGH THE EVAPORATOR AND PRIOR TO ITS COMPRESSION WITHIN THE ITEM.

Reply Instructions: Enter the applicable Reply Code from the table below, followed by the numeric value. (e.g., AAYFJV11.8*; AAYFJK0.8*)

For items that do not require a rating, change the Mode Code to K and enter Reply Code N. (e.g., AAYFKN*)

REPLY CODE	REPLY (AB18)
E	INCHES OF MERCURY VACUUM
K	KILOGRAMS PER SQUARE CENTIMETER
P	POUNDS
V	POUNDS PER SQUARE INCH
G	POUNDS PER SQUARE INCH GAGE

ALL

AAXM J DISCHARGE PRESSURE

Definition: THE GAGE PRESSURE OF GAS DELIVERED BY THE LAST STAGE OF COMPRESSION. REFERRED TO AS CONDENSING PRESSURE FOR REFRIGERATION COMPRESSORS.

Reply Instructions: Enter the applicable Reply Code from the table below, followed by the numeric value. (e.g., AAXMJG146.0*; AAXMJK10.3*)

For items that do not require a rating, change the Mode Code to K and enter Reply Code N. (e.g., AAXMKN*)

For pressure greater than atmospheric, specify in pounds per square inch. For pressure less than atmospheric, specify in inches of mercury vacuum.

REPLY CODE	REPLY (AA95)

APP Key	MRC	Mode Code	Requirements
		E	INCHES OF MERCURY VACUUM
		K	KILOGRAMS PER SQUARE CENTIMETER
		P	POUNDS
		G	POUNDS PER SQUARE INCH GAGE

ALL

ANDX J AMBIENT TEMP

Definition: THE TEMPERATURE OF THE MEDIUM SURROUNDING AN ITEM AT WHICH IT CAN BE OPERATED.

Reply Instructions: Enter the applicable Reply Code from the table below, followed by the numeric value. (e.g., ANDXJF100.0*)

For items that do not require a rating, change the Mode Code to K and enter Reply Code N. (e.g., ANDXKN*)

REPLY CODE	REPLY (AB36)
C	DEG CELSIUS
F	DEG FAHRENHEIT

ALL

AWLG D COMPRESSING UNIT TYPE

Definition: INDICATES THE TYPE OF COMPRESSING UNIT PROVIDED.

Reply Instructions: Enter the applicable Reply Code from the table below. (e.g., AWLGDAAB*; AWLGDAAF$DAAG*)

REPLY CODE	REPLY (AK04)
A	ANY ACCEPTABLE
AAD	AXIAL FLOW
AAE	CENTRIFUGAL
AAB	RECIPROCATING
AAF	RECIPROCATING VACUUM PUMP
AAG	ROTARY
AAH	ROTARY VACUUM PUMP

ALL

APP Key	MRC	Mode Code	Requirements
	AWLH	D	COMPRESSING UNIT DESIGN TYPE

Definition: INDICATES THE DESIGN TYPE OF THE COMPRESSING UNIT.

Reply Instructions: Enter the applicable Reply Code from the table below. (e.g., AWLHDAJN*; AWLHDAJN$DAJP*)

An open type compressor is designed to be externally driven, the flywheel or coupling being attached to the external portion of the crankshaft. A crankshaft stuffing box, or bellows seal, is utilized to contain refrigerant in the crankcase. A closed type compressor is designed to be internally driven, with the driving motor shaft and crankshaft being an integral unit. The compressor and motor are totally inclosed in a housing, thus eliminating the use of a driving pulley and belts, or driving coupling, crankshaft seal or stuffing box. The closed type is commonly known in industry as the hermetic or semihermetic compressor.

REPLY CODE	REPLY (AK54)
AJN	CLOSED
AJP	OPEN

ALL

	AAYS	B	COMPRESSOR SPEED AT RATED CAPACITY IN RPM

Definition: THE SPEED OF THE COMPRESSOR REQUIRED TO PRODUCE ITS RATED CAPACITY, EXPRESSED IN REVOLUTIONS PER MINUTE.

Reply Instructions: Enter the numeric value. (e.g., AAYSB1750.0*)

For items that do not require a rating, change the Mode Code to K and enter Reply Code N. (e.g., AAYSKN*)

ALL

	AWLJ	A	COMPRESSING UNIT CYLINDER QUANTITY

Definition: THE NUMBER OF CYLINDERS PROVIDED IN THE COMPRESSING UNIT.

Reply Instructions: Enter the quantity. (e.g., AWLJA2*)

ALL

APP Key	MRC	Mode Code	Requirements
	AWLK	J	COMPRESSING UNIT CYLINDER BORE DIAMETER

Definition: THE LENGTH OF A STRAIGHT LINE WHICH PASSSES THROUGH THE CENTER OF THE CIRCULAR CROSS-SECTIONAL PLANE OF THE CYLINDER BORE, AND TERMINATES AT THE CIRCUMFERENCE.

Reply Instructions: Enter the applicable Reply Codes from Tables 1 and 2 below, followed by the numeric value. (e.g., AWLKJAA1.750*; AWLKJLA44.4*; AWLKJAB1.745$$JAC1.750*)

Table 1

REPLY CODE	REPLY (AA05)
A	INCHES
L	MILLIMETERS

Table 2

REPLY CODE	REPLY (AC20)
A	NOMINAL
B	MINIMUM
C	MAXIMUM

ALL *

AWWM	J	COMPRESSING UNIT STROKE LENGTH

Definition: A MEASUREMENT OF THE LONGEST DIMENSION OF THE STROKE OF A COMPRESSING UNIT, IN DISTINCTION FROM WIDTH.

Reply Instructions: Enter the applicable Reply Code from the table below, followed by the numeric value. (e.g., AWWMJA1.375*; AWWMJL34.9*)

REPLY CODE	REPLY (AA05)
A	INCHES
L	MILLIMETERS

ALL

AAXR	D	COMPRESSOR COOLING MEDIUM

Definition: THE COOLING MEDIUM USED TO MAINTAIN THE REQUIRED OPERATING TEMPERATURE OF THE COMPRESSOR.

APP Key	MRC	Mode Code	Requirements

Reply Instructions: Enter the applicable Reply Code from Appendix A , Table 1. (e.g., AAXRDAB*; AAXRDCR$$DCS*; AAXRDCR$DCS*)

ALL

AWLL D CONDENSER COOLING MEDIUM

Definition: THE COOLING MEDIUM USED TO MAINTAIN THE REQUIRED OPERATING TEMPERATURE OF THE CONDENSER.

Reply Instructions: Enter the applicable Reply Code from Appendix A , Table 1. (e.g., AWLLDDF*; AWLLDCR$$DCS*; AWLLDCR$DCS*)

NOTE FOR MRCS AWCD, AWLM, AND AWLN: IF REPLY CODE DF IS ENTERED FOR MRC AWLL, REPLY TO MRCS AWCD, AWLM, AND AWLN.

ALL * (See Note Above)

AWCD D WATER FOR WHICH DESIGNED

Definition: THE TYPE OF WATER WITH WHICH THE ITEM IS DESIGNED TO BE USED.

Reply Instructions: Enter the applicable Reply Code from the table below. (e.g., AWCDDKR*; AWCDDKR$DKS*)

REPLY CODE	REPLY (AB75)
KR	FRESH
KS	SALT

ALL * (See Note Preceding MRC AWCD)

AWLM J CONDENSER OVERALL LENGTH

Definition: THE DIMENSION MEASURED ALONG THE LONGITUDINAL AXIS WITH TERMINATED POINTS AT THE EXTREME ENDS OF THE CONDENSER.

Reply Instructions: Enter the applicable Reply Codes from Tables 1 and 2 below, followed by the numeric value. (e.g., AWLMJAA6.000*; AWLMJLA152.4*; AWLMJAB5.500$$JAC6.000*)

Table 1

REPLY CODE	REPLY (AA05)
F	FEET
A	INCHES

APP Key	MRC	Mode Code	Requirements

M	METERS
L	MILLIMETERS

Table 2

REPLY CODE	REPLY (AC20)
A	NOMINAL
B	MINIMUM
C	MAXIMUM

ALL * (See Note Preceding MRC AWCD)

AWLN J CONDENSER SHELL OUTSIDE DIAMETER

Definition: THE LENGTH OF A STRAIGHT LINE WHICH PASSES THROUGH THE CENTER OF THE CONDENSER SHELL, AND TERMINATES AT THE OUTSIDE CIRCUMFERENCE.

Reply Instructions: Enter the applicable Reply Codes from Tables 1 and 2 below, followed by the numeric value. (e.g., AWLNJAA10.000*; AWLNJLA254.2*; AWLNJAB8.500$$JAC9.000*)

Table 1

REPLY CODE	REPLY (AA05)
A	INCHES
L	MILLIMETERS

Table 2

REPLY CODE	REPLY (AC20)
A	NOMINAL
B	MINIMUM
C	MAXIMUM

ALL

AWLP D CONDENSER TYPE

Definition: INDICATES THE TYPE OF CONDENSER.

Reply Instructions: Enter the applicable Reply Code from the table below. (e.g., AWLPDAB*; AWLPDAC$DAE*)

REPLY CODE	REPLY (AM41)
A	ANY ACCEPTABLE

APP Key	MRC	Mode Code	Requirements
		AE	COIL CONDENSER-RECEIVER
		AB	DOUBLE TUBE
		AC	FIN
		AD	FINNED TUBE
		AF	SHELL
		AG	TUBE

ALL *

AWXH J CONDENSER HEAT TRANSFER AREA

Definition: THE AMOUNT OF HEAT TRANSFER AREA OF THE CONDENSER.

Reply Instructions: Enter the applicable Reply Code from the table below, followed by the numeric value. (e.g., AWXHJF48.000*; AWXHJM4.4*)

REPLY CODE	REPLY (AC51)
F	SQUARE FEET
M	SQUARE METERS

ALL *

AWXJ J SEPARATE LIQUID RECEIVER CAPACITY

Definition: A MEASUREMENT OF THE CAPACITY OF A SEPARATE LIQUID RECEIVER.

Reply Instructions: Enter the applicable Reply Code from the table below, followed by the numeric value. (e.g., AWXJJF0.011*; AWXJJC311.5*)

REPLY CODE	REPLY (AD42)
C	CUBIC CENTIMETERS
F	CUBIC FEET

ALL

AKDJ D PRIME MOVER TYPE

Definition: INDICATES THE TYPE OF PRIME MOVER INCLUDED WITH THE UNIT.

APP Key	MRC	Mode Code	Requirements

Reply Instructions: Enter the applicable Reply Code from the table below. (e.g., AKDJDAD*; AKDJDAC$DAE*)

REPLY CODE	REPLY (AG27)
AC	DIESEL ENGINE
AD	ELECTRIC MOTOR
AE	GASOLINE ENGINE
AL	STEAM ENGINE

NOTE FOR MRCS AWLX, AHZX, AWLY, CSBH, FREQ, FAAZ, AEQC, AND ALBY: REPLY TO MRCS AWLX, AHZX, AWLY, CSBH, FREQ, FAAZ AND AEQC IF REPLY CODE AD IS ENTERED FOR MRC AKDJ. REPLY TO MRCS AHZX AND ALBY IF OTHER THAN REPLY CODE AD IS ENTERED FOR MRC AKDJ.

ALL * (See Note Above)

AWLX A ELECTRIC MOTOR QUANTITY

Definition: THE NUMBER OF ELECTRIC MOTORS PROVIDED.

Reply Instructions: Enter the quantity. (e.g., AWLXA1*)

ALL * (See Note Preceding MRC AWLX)

AHZX B PRIME MOVER HORSEPOWER RATING

Definition: THE RATED HORSEPOWER OF THE PRIME MOVER.

Reply Instructions: Enter the numeric value. (e.g., AHZXB3.0*)

For items that do not require a rating, change the Mode Code to K and enter Reply Code N. (e.g., AHZXKN*)

ALL * (See Note Preceding MRC AWLX)

AWLY D COMPONENT FOR WHICH DESIGNED

Definition: AN INDICATION OF THE COMPONENT FOR WHICH THE ITEM IS DESIGNED.

Reply Instructions: Enter the applicable Reply Code from the table below. (e.g., AWLYDAB*)

REPLY CODE	REPLY (AM42)

APP Key	MRC	Mode Code	Requirements
		A	ANY ACCEPTABLE
		AB	COMPRESSOR
		AC	CONDENSER FAN
		AD	FAN

ALL * (See Note Preceding MRC AWLX)

CSBH J VOLTAGE IN VOLTS AND CURRENT TYPE

Definition: THE TOTAL ELECTRICAL VOLTAGE, EXPRESSED IN VOLTS, AND THE TYPE OF CURRENT WHETHER ALTERNATING OR DIRECT.

Reply Instructions: Enter the applicable Reply Code from the table below, followed by the numeric value. (e.g., CSBHJAC6.5*; CSBHJAC6.5$$JAC7.0*; CSBHJAC6.5$JDC7.0*; CSHBJAC120.0$JDC12.0*)

REPLY CODE	REPLY (AN87)
AC	AC
DC	DC

NOTE FOR MRCS FREQ AND FAAZ: IF REPLY CODE B OR D IS ENTERED FOR MRC ACDC, REPLY TO MRCS FREQ AND FAAZ.

ALL * (See Note above and Preceding MRC AWLX)

FREQ B FREQUENCY IN HERTZ

Definition: THE CYCLES PER SECOND (HERTZ) OF THE ALTERNATING CURRENT.

Reply Instructions: Enter the numeric value. (e.g., FREQB400.0*; FREQB50.0$B60.0*)

For items that do not require a rating, change the Mode Code to K and enter Reply Code N. (e.g., FREQKN*)

ALL * (See Note Preceding MRCS FREQ and AWLX)

FAAZ D PHASE

Definition: THE NUMBER OF ALTERNATING CURRENT PHASES.

APP Key	MRC	Mode Code	Requirements

Reply Instructions: Enter the applicable Reply Code from the table below. (e.g., FAAZDC*; FAAZDB$DC*)

REPLY CODE	REPLY (AD02)
A	SINGLE
E	SINGLE/THREE
C	THREE
B	TWO

ALL * (See Note Preceding MRC AWLX)

AEQC	B	OPERATING SPEED AT RATED CAPACITY IN RPM

Definition: THE SPEED OF THE DRIVE SHAFT REQUIRED TO PRODUCE THE RATED CAPACITY OF AN ITEM, EXPRESSED IN REVOLUTIONS PER MINUTE.

Reply Instructions: Enter the numeric value. (e.g., AEQCB1750.0*)

For items that do not require a rating, change the Mode Code to K and enter Reply Code N. (e.g., AEQCKN*)

ALL * (See Note Preceding MRC AWLX)

ALBY	D	USAGE DESIGN

Definition: INDICATES THE DESIGNED USE OF THE ITEM.

Reply Instructions: Enter the applicable Reply Code from the table below. (e.g., ALBYDAFA*; ALBYDAFA$DAFB*)

REPLY CODE	REPLY (AH21)
AFA	MAIN DRIVE
AFB	STANDBY

ALL

AKCV	D	DRIVE TYPE

Definition: INDICATES THE TYPE OF DRIVE FOR TURNING, ROTATING, OR POSITIONING THE MECHANISM.

APP Key	MRC	Mode Code	Requirements

Reply Instructions: Enter the applicable Reply Code from the table below. (e.g., AKCVDAB*; AKCVDAC$DAG*)

REPLY CODE	REPLY (AG25)
AB	BELT
AC	DIRECT
AG	GEAR

SECTION: C

APP Key	MRC	Mode Code	Requirements
ALL			
	NAME	D	ITEM NAME

Definition: A NOUN, WITH OR WITHOUT MODIFIERS, BY WHICH AN ITEM OF SUPPLY IS KNOWN.

Reply Instructions: Enter the applicable Item Name Code from the index appearing in the General Information Section. (e.g., NAMED11361*)

ALL *

ABMK	J	OVERALL WIDTH

Definition: AN OVERALL MEASUREMENT TAKEN AT RIGHT ANGLES TO THE LENGTH OF AN ITEM, IN DISTINCTION FROM THICKNESS.

Reply Instructions: Enter the applicable Reply Codes from Tables 1 and 2 below, followed by the numeric value. (e.g., ABMKJAA2.500*; ABMKJLA63.5*; ABMKJAB2.000$$JAC2.500*)

Table 1

REPLY CODE	REPLY (AA05)
A	INCHES
L	MILLIMETERS

Table 2

REPLY CODE	REPLY (AC20)
A	NOMINAL
B	MINIMUM
C	MAXIMUM

ALL *

ADAV	J	OVERALL DIAMETER

Definition: A MEASUREMENT OF THE LONGEST STRAIGHT LINE ACROSS A CIRCULAR CROSS-SECTIONAL PLANE.

Reply Instructions: Enter the applicable Reply Codes from Tables 1 and 2 below, followed by the numeric value. (e.g., ADAVJAA2.400*; ADAVJLA60.9*; ADAVJAB2.125$$JAC2.375*)

Table 1

APP Key	MRC	Mode Code	Requirements

REPLY CODE	REPLY (AA05)
A	INCHES
L	MILLIMETERS

Table 2

REPLY CODE	REPLY (AC20)
A	NOMINAL
B	MINIMUM
C	MAXIMUM

ALL *

ABKW J OVERALL HEIGHT

Definition: THE DISTANCE MEASURED IN A STRAIGHT LINE FROM THE BOTTOM TO THE TOP OF AN ITEM.

Reply Instructions: Enter the applicable Reply Codes from Tables 1 and 2 below, followed by the numeric value. (e.g., ABKWJAA2.500*; ABKWJLA63.5*; ABKWJAB2.125$$JAC2.375*)

Table 1

REPLY CODE	REPLY (AA05)
A	INCHES
L	MILLIMETERS

Table 2

REPLY CODE	REPLY (AC20)
A	NOMINAL
B	MINIMUM
C	MAXIMUM

ALL *

ABFY J OVERALL DEPTH

Definition: AN OVERALL MEASUREMENT BETWEEN SPECIFIED POINTS OF AN ITEM, IN DISTINCTION FROM HEIGHT.

Reply Instructions: Enter the applicable Reply Codes from Tables 1 and 2 below, followed by the numeric value. (e.g., ABFYJAA2.400*; ABFYJLA60.9*; ABFYJAB2.125$$JAC2.375*)

Table 1

APP Key	MRC	Mode Code	Requirements

REPLY CODE	REPLY (AA05)
A	INCHES
L	MILLIMETERS

Table 2

REPLY CODE	REPLY (AC20)
A	NOMINAL
B	MINIMUM
C	MAXIMUM

ALL

ADTV D CASE MATERIAL

Definition: THE ELEMENT, COMPOUND, OR MIXTURE OF WHICH THE CASE IS FABRICATED, EXCLUDING ANY SURFACE TREATMENT.

Reply Instructions: Enter the applicable Reply Code from Appendix A , Table 2. (e.g., ADTVDST0000*; ADTVDBR0000$$DST0000*; ADTVDBR0000$DST0000*)

ALL

AWLZ D CASE WITH BUILT-IN CONDENSATE DRAIN PAN

Definition: AN INDICATION OF WHETHER OR NOT A CASE WITH A BUILT-IN CONDENSATE DRAIN PAN IS INCLUDED.

Reply Instructions: Enter the applicable Reply Code from the table below. (e.g., AWLZDB*)

REPLY CODE	REPLY (AA49)
B	INCLUDED
C	NOT INCLUDED

NOTE FOR MRCS AWGF AND CWMP: A REPLY MUST BE ENTERED FOR EITHER MRC AWGF OR CWMP.

ALL * (See Note Above)

AWGF J EFFECTIVE COOLING AREA

Definition: THE AMOUNT OF EFFECTIVE COOLING AREA.

APP Key	MRC	Mode Code	Requirements

Reply Instructions: Enter the applicable Reply Code from the table below, followed by the numeric value. (e.g., AWGFJF0.90*; AWGFJC836.1*)

REPLY CODE	REPLY (AC51)
C	SQUARE CENTIMETERS
F	SQUARE FEET

ALL * (See Note Preceeding MRC AWGF)

CWMP	J	NOMINAL CAPACITY IN BTU PER HOUR

Definition: THE NOMINAL CAPACITY OF THE ITEM TO COOL OR HEAT, EXPRESSED IN BRITISH THERMAL UNITS PER HOUR.

Reply Instructions: Enter the applicable Reply Code from the table below, followed by the numeric value. (e.g., CWMPJAKW6000.0$$JAKX23000.0*)

REPLY CODE	REPLY (AK95)
AKW	COOLING
AKX	HEATING

NOTE FOR MRC CWMQ: REPLY TO MRC CWMQ ONLY WHEN REPLY CODE AKX IS ENTERED FOR MRC CWMP.

ALL * (See Note Above)

CWMQ	B	HEATER WATTAGE RATING IN KILOWATTS

Definition: THE RATED POWER THE HEATER CAN SAFELY CONSUME OR PROVIDE, MEASURED IN KILOWATTS.

Reply Instructions: Enter the numeric value. (e.g., CWMQB3.5*)

CA

AWGJ	D	TUBE MATERIAL

Definition: THE ELEMENT, COMPOUND, OR MIXTURE OF WHICH THE TUBE IS FABRICATED, EXCLUDING ANY SURFACE TREATMENT.

Reply Instructions: Enter the applicable Reply Code from Appendix A , Table 2. (e.g., AWGJDCU0000*; AWGJDCU0000$$DST0000*; AWGJDCU0000$DST0000*)

APP Key	MRC	Mode Code	Requirements
CA			
	AWLQ	A	COIL TUBE QUANTITY
	Definition: THE NUMBER OF TUBES PROVIDED IN THE COIL.		
	Reply Instructions: Enter the quantity. (e.g., AWLQA48*)		
CA			
	AWLR	A	TUBE CIRCUIT QUANTITY
	Definition: THE NUMBER OF TUBE CIRCUITS PROVIDED.		
	Reply Instructions: Enter the quantity. (e.g., AWLRA12*)		
ALL			
	ACZV	D	COOLING MEDIUM
	Definition: THE COOLING MEDIUM USED TO MAINTAIN THE REQUIRED OPERATING TEMPERATURE OF THE ITEM.		
	Reply Instructions: Enter the applicable Reply Code from Appendix A , Table 1. (e.g., ACZVDES*; ACZVDCR$$DCS*; ACZVDCR$DCS*)		
ALL *			
	AWLS	D	CONNECTION TYPE
	Definition: INDICATES THE TYPE OF CONNECTION(S).		
	Reply Instructions: Enter the applicable Reply Code from Appendix A , Table 3. (e.g., AWLSDBR*; AWLSDBQ$$DBR*; AWLSDBQ$DBR*)		
ALL *			
	AWLT	G	SUPPLY CONNECTION SIZE
	Definition: DESIGNATES THE SIZE OF THE SUPPLY CONNECTION.		
	Reply Instructions: Enter the reply in clear text. (e.g., AWLTG1 IN. OD*)		
ALL *			
	AWLW	G	RETURN CONNECTION SIZE

APP Key	MRC	Mode Code	Requirements

Definition: DESIGNATES THE SIZE OF THE RETURN CONNECTION.

Reply Instructions: Enter the reply in clear text. (e.g., AWLWG1 IN. OD*)

ALL *

AWMA D FAN TYPE

Definition: INDICATES THE TYPE OF FAN PROVIDED.

Reply Instructions: Enter the applicable Reply Code from the table below. (e.g., AWMADAE*; AWMADAE$DAF*)

REPLY CODE	REPLY (AL87)
A	ANY ACCEPTABLE
AE	AXIAL
AF	CENTRIFUGAL
AG	PROPELLER
AH	SQUIRREL CAGE BLOWER
AJ	TUBE AXIAL

NOTE FOR MRCS AWMB, AHZX AND AEQC: IF A REPLY IS ENTERED FOR MRC AWMA, REPLY TO MRCS AWMB, AHZX AND AEQC.

ALL * (See Note Above)

AWMB D FAN DRIVE TYPE

Definition: INDICATES THE TYPE OF DRIVE PROVIDED FOR THE FAN.

Reply Instructions: Enter the applicable Reply Code from the table below. (e.g., AWMBDAB*; AWMBDAB$DAC*)

REPLY CODE	REPLY (AG25)
AB	BELT
AC	DIRECT

ALL * (See Note Preceeding MRC AWMB)

AHZX B PRIME MOVER HORSEPOWER RATING

Definition: THE RATED HORSEPOWER OF THE PRIME MOVER.

APP Key	MRC	Mode Code	Requirements

Reply Instructions: Enter the numeric value. (e.g., AHZXB0.250*)

Reply for the Fan Motor only.

For items that do not require a rating, change the Mode Code to K and enter Reply Code N. (e.g., AHZXKN*)

ALL * (See Note Preceeding MRC AWMB)

AEQC	B	OPERATING SPEED AT RATED CAPACITY IN RPM

Definition: THE SPEED OF THE DRIVE SHAFT REQUIRED TO PRODUCE THE RATED CAPACITY OF AN ITEM, EXPRESSED IN REVOLUTIONS PER MINUTE.

Reply Instructions: Enter the numeric value. (e.g., AEQCB1725.0*)

For items that do not require a rating, change the Mode Code to K and enter Reply Code N. (e.g., AEQCKN*)

ALL *

ACDC	D	CURRENT TYPE

Definition: INDICATES THE TYPE OF CURRENT WHETHER ALTERNATING, DIRECT, OR BOTH.

Reply Instructions: Enter the applicable I/SAC from Appendix C , Table 9, followed by the mode code and the applicable Reply Code from the table below. (e.g., ACDC1ADB*; ACDC1BDC*)

REPLY CODE	REPLY (AB62)
B	AC
D	AC/DC
C	DC

ALL *

ELEC	B	VOLTAGE IN VOLTS

Definition: THE TOTAL ELECTRICAL VOLTAGE.

APP Key	MRC	Mode Code	Requirements

Reply Instructions: Enter the applicable I/SAC from Appendix C , Table 9, followed by the Mode Code and the numeric value. (e.g., ELEC1AB110.0*; ELEC1BB440.0*)

When multiple voltages are specified list the AC voltages in ascending order first, followed by the DC voltages in ascending order. (e.g., ELEC1AB110.0$$B115.0$$B28.0*; ELEC1BB115.0$$B28.0$$B440.0*)

For items that do not require a rating, change the Mode Code to K and enter Reply Code N. (e.g., ELECKN*)

ALL *

FREQ B FREQUENCY IN HERTZ

Definition: THE CYCLES PER SECOND (HERTZ) OF THE ALTERNATING CURRENT.

Reply Instructions: Enter the applicable I/SAC from Appendix C , Table 9, followed by the Mode Code, and the numeric value. (e.g., FREQ1AB50.0*; FREQ1CB50.0*)

If multiple frequencies are specified, enter a frequency reply for each AC voltage reply in MRC ELEC and in the same sequence. (e.g., FREQ1AB50.0$$B60.0*; FREQ1CB50.0$$B60.0*)

For items that do not require a rating, change the Mode Code to K and enter Reply Code N. (e.g., FREQKN*)

ALL *

FAAZ D PHASE

Definition: THE NUMBER OF ALTERNATING CURRENT PHASES.

Reply Instructions: Enter the applicable I/SAC from Appendix C , Table 9, followed by the Mode Code and the applicable Reply Code from the table below. (e.g., FAAZ1ADA*; FAAZ1CDA*)

If optional phases are specified, use OR ($) coding, listing in reply table sequence. (e.g., FAAZ1ADA$DC*; FAAZ1CDA$DC*)

REPLY CODE	REPLY (AD02)
A	SINGLE
E	SINGLE/THREE
C	THREE
B	TWO

FIIG T
Section Parts

APP Key	MRC	Mode Code	Requirements

SECTION: D

APP Key	MRC	Mode Code	Requirements
ALL			
	NAME	D	ITEM NAME

Definition: A NOUN, WITH OR WITHOUT MODIFIERS, BY WHICH AN ITEM OF SUPPLY IS KNOWN.

Reply Instructions: Enter the applicable Item Name Code from the index appearing in the General Information Section. (e.g., NAMED13148*)

ALL

MATL	D	MATERIAL

Definition: THE ELEMENT, COMPOUND, OR MIXTURE OF WHICH AN ITEM IS FABRICATED, EXCLUDING ANY SURFACE TREATMENT.

Reply Instructions: Enter the applicable Reply Code from Appendix A , Table 2. (e.g., MATLDBR0000*; MATLDBR0000$$DST0000*; MATLDBR0000$DST0000*)

Replies for Applicability Key DB will exclude fittings.

DA

SURF	D	SURFACE TREATMENT

Definition: CONSISTS OF PLATING, DIP, AND/OR COATING THAT CANNOT BE WIPED OFF. PLATING AND/OR COATING IS ANY CHEMICAL AND/OR METALLIC ADDITIVE, ELECTROCHEMICAL, OR MILD MECHANICAL PROCESS WHICH PROTECTS A SURFACE.

Reply Instructions: Enter the applicable Reply Code from the table below. (e.g., SURFDCDR000*; SURFDCDR000$$DCRA000*; SURFDCDR000$DCRA000*)

REPLY CODE	REPLY (AD09)
A	ANY ACCEPTABLE
CDR000	CADMIUM PLATED
CRA000	CHROMIUM PLATED

DA

ATQR	A	VALVE QUANTITY

APP Key	MRC	Mode Code	Requirements

Definition: THE NUMBER OF VALVES PROVIDED.

Reply Instructions: Enter the quantity. (e.g., ATQRA2*)

DA

AWMC D VALVE HANDLE

Definition: AN INDICATION OF WHETHER OR NOT VALVE HANDLES ARE INCLUDED.

Reply Instructions: Enter the applicable Reply Code from the table below. (e.g., AWMCDB*)

REPLY CODE	REPLY (AA49)
B	INCLUDED
C	NOT INCLUDED

NOTE FOR MRC ADQF: IF REPLY CODE B IS ENTERED FOR MRC AWMC, REPLY TO MRC ADQF.

DA* (See Note Above)

ADQF D HANDLE TYPE

Definition: INDICATES THE TYPE OF HANDLE DESIGNED TO BE ATTACHED TO OR THROUGH AN ITEM FOR THE PURPOSE OF OPENING, LIFTING, CLOSING, OR THE LIKE.

Reply Instructions: Enter the applicable Reply Code from the table below. (e.g., ADQFDAG*; ADQFDBA$DAG*)

REPLY CODE	REPLY (AC55)
BA	HANDWHEEL
AG	LEVER

DA

ADQZ A END CONNECTION QUANTITY

Definition: THE NUMBER OF END CONNECTIONS INCLUDED IN THE ITEM.

APP Key	MRC	Mode Code	Requirements

Reply Instructions: Enter the applicable I/SAC from the table below, followed by the quantity. (e.g., ADQZ1AA2*; ADQZ1ZA4*)

REPLY CODE	REPLY (0281)
1Z	ALL GROUPS
1X	SINGLE GROUP
1A	1st GROUP
1B	2nd GROUP
1C	3rd GROUP
1D	4th GROUP

DA

STYL	L	STYLE DESIGNATOR

Definition: THE STYLE DESIGNATION INDICATING THE CONFIGURATION THAT MOST NEARLY CORRESPONDS TO THE APPEARANCE OF THE ITEM.

Reply Instructions: Enter the applicable I/SAC from the table below, followed by the applicable group designator and style number from Appendix B , Reference Drawing Group A . (e.g., STYL1AA36*; STYL1ZA42*)

REPLY CODE	REPLY (0281)
1Z	ALL GROUPS
1X	SINGLE GROUP
1A	1st GROUP
1B	2nd GROUP
1C	3rd GROUP
1D	4th GROUP

NOTE FOR MRC THDS: FOR END CONNECTIONS THAT ARE UNTHREADED OMIT REPLY TO MRC THDS.

DA* (See Note Above)

THDS	J	THREAD SIZE AND SERIES/TYPE DESIGNATOR

APP Key	MRC	Mode Code	Requirements

Definition: DESIGNATES THE THREAD DIAMETER, SERIES/TYPE, AND NUMBER OF THREADS PER SPECIFIC MEASUREMENT SCALE.

Reply Instructions: Enter the applicable I/SAC from the table below, followed by the applicable Reply Code from Appendix A , Table 6 , followed by the size. (e.g., THDS1AJBL0.250-14*; THDS1ZJBL0.250-14*)

REPLY CODE	REPLY (AC55)
1Z	ALL GROUPS
1X	SINGLE GROUP
1A	1st GROUP
1B	2nd GROUP
1C	3rd GROUP
1D	4th GROUP

DB

ABHP	J	OVERALL LENGTH

Definition: THE DIMENSION MEASURED ALONG THE LONGITUDINAL AXIS WITH TERMINATED POINTS AT THE EXTREME ENDS OF THE ITEM.

Reply Instructions: Enter the applicable Reply Codes from Tables 1 and 2 below, followed by the numeric value. (e.g., ABHPJAA8.000*; ABHPJLA196.0*; ABHPJAB7.500$$JAC8.000*)

Table 1

REPLY CODE	REPLY (AA05)
A	INCHES
L	MILLIMETERS

Table 2

REPLY CODE	REPLY (AC20)
A	NOMINAL
B	MINIMUM
C	MAXIMUM

DB*

AKYD	G	ACCESSORY COMPONENTS AND QUANTITY

APP Key	MRC	Mode Code	Requirements

Definition: THE NAME AND NUMBER OF PARTS SUPPLIED WITH THE ITEM WHICH MAY BE REQUIRED FOR APPLICATION.

Reply Instructions: Enter the reply in clear text. (e.g., AKYDGNUT, FLARE, 1/4 IN.*)

SECTION: E

APP Key	MRC	Mode Code	Requirements
ALL			
	NAME	D	ITEM NAME

Definition: A NOUN, WITH OR WITHOUT MODIFIERS, BY WHICH AN ITEM OF SUPPLY IS KNOWN.

Reply Instructions: Enter the applicable Item Name Code from the index appearing in the General Information Section. (e.g., NAMED15767*)

EA, EB

ADSM	D	MOUNTING POSITION

Definition: THE INSTALLED POSITION FOR WHICH THE ITEM IS DESIGNED.

Reply Instructions: Enter the applicable Reply Code from the table below. (e.g., ADSMDB*; ADSMDB$DD*)

REPLY CODE	REPLY (AC60)
B	HORIZONTAL
D	VERTICAL

ALL

ACKL	D	MEDIA FOR WHICH DESIGNED

Definition: THE TYPE OF SERVICE WITH WHICH THE ITEM IS DESIGNED TO BE USED.

Reply Instructions: Enter the applicable Reply Code from Appendix A , Table 1. (e.g., ACKLDCR*; ACKLDCR$$DCS*; ACKLDCR$DCS*)

EA*, EB*, EC

AWXK	J	REFRIGERANT CAPACITY

Definition: THE AMOUNT OF REFRIGERANT THE ITEM WILL HOLD.

Reply Instructions: Enter the applicable Reply Code from the table below, followed by the numeric value. (e.g., AWXKJAS40.0*; AWXKJAJ18.1*)

REPLY CODE	REPLY (AG67)

APP Key	MRC	Mode Code	Requirements
		BA	GRAMS
		AJ	KILOGRAMS
		AN	OUNCES
		AS	POUNDS

EA*, EB*

AWXL J MINIMUM CAPACITY

Definition: THE MINIMUM CAPACITY OF THE ITEM.

Reply Instructions: Enter the applicable Reply Code from the table below, followed by the numeric value. (e.g., AWXLJB200.0*; AWXLJC508.0*)

REPLY CODE	REPLY (AD42)
C	CUBIC CENTIMETERS
B	CUBIC INCHES

EA*, EB*

AWMD B REFRIGERANT TEMP AT MINIMUM CAPACITY IN DEG FAHRENHEIT

Definition: THE REFRIGERANT TEMPERATURE AT THE MINIMUM CAPACITY, EXPRESSED IN DEGREES FAHRENHEIT.

Reply Instructions: Enter the numeric value. (e.g., AWMDB70.0*)

EA, EB, EC*

ABHP J OVERALL LENGTH

Definition: THE DIMENSION MEASURED ALONG THE LONGITUDINAL AXIS WITH TERMINATED POINTS AT THE EXTREME ENDS OF THE ITEM.

Reply Instructions: Enter the applicable Reply Codes from Tables 1 and 2 below, followed by the numeric value, excluding mounting supports and protruding connection. (e.g., ABHPJAA8.000*; ABHPJLA203.2*; ABHPJAB7.500$$JAC8.000*)

Table 1

REPLY CODE	REPLY (AA05)
A	INCHES
L	MILLIMETERS

APP Key	MRC	Mode Code	Requirements

Table 2

REPLY CODE	REPLY (AC20)
A	NOMINAL
B	MINIMUM
C	MAXIMUM

EA, EB

AWKS J SHELL OUTSIDE DIAMETER

Definition: THE LENGTH OF A STRAIGHT LINE WHICH PASSES THROUGH THE CENTER OF THE SHELL, AND TERMINATES AT THE OUTSIDE CIRCUMFERENCE.

Reply Instructions: Enter the applicable Reply Code from the table below, followed by the numeric value. (e.g., AWKSJA6.625*; AWKSJL16.8*)

REPLY CODE	REPLY (AA05)
A	INCHES
L	MILLIMETERS

EA, EB

MATL D MATERIAL

Definition: THE ELEMENT, COMPOUND, OR MIXTURE OF WHICH AN ITEM IS FABRICATED, EXCLUDING ANY SURFACE TREATMENT.

Reply Instructions: Enter the applicable Reply Code from Appendix A , Table 2. (e.g., MATLDBR0000*; MATLDBR0000$$DST0000*; MATLDBR0000$DST0000*)

EA, EB

AWPR H END CONNECTION TYPE AND LOCATION

Definition: INDICATES THE TYPE OF END CONNECTION AND ITS LOCATION ON THE ITEM.

Reply Instructions: Enter the applicable Reply Codes from Appendix A , Table 5 and the table below, respectively. (e.g., AWPRHAAAHJ*; AWPRHARAHJ$HASAHJ*)

APP Key	MRC	Mode Code	Requirements

Consider the inlet as the first end and the outlet as the second end. To determine whether the connection is pipe or tube, see Appendix C, Tables 1 through 6. For items of lead or lead alloy, if the inside diameter is less than 1/2 inch the item is considered to be a tube.

When optional connection types are specified for multiple locations, use AND/OR coding ($$/$). AND Coding will separate locations and OR coding will separate connection types. (e.g., AWPRHAAAHJ$$HARALP$HASALP*)

REPLY CODE	REPLY (AJ91)
AHJ	FIRST END
ALR	FOURTH END
ALP	SECOND END
ALQ	THIRD END

NOTES FOR MRCS AWPS, STYL, ACSV, AJES, ABKV, AWME, ACSU, AWMF, ABUJ, AWMG, AWMH, AJYP, AAJD, AAJE, AAJF, AJFY, AJFZ, AHSJ, AWMJ, ABKU, ADML, ADMM, ADMN, ADME, AWMK, AWML, AND AGSX: USE AND/OR ($$/$) CODING TO ENTER A REPLY FOR EACH LOCATION. AND AS INDICATED BY THE REQUIREMENT EXAMPLE.

EA*, EB* (See Note Above)

AWPS D CONNECTION SPECIAL DESIGN

Definition: THE SPECIAL DESIGN OF THE CONNECTION.

Reply Instructions: Enter the applicable Reply Code from the table below. (e.g., AWPSDCD*;

AWPSDCD$$DBP*;

AWPSDCD$DBP*)

REPLY CODE	REPLY (AB76)
CD	BULKHEAD
BP	UNION

EA*, EB* (See Note Preceding MRC AWPS)

STYL L STYLE DESIGNATOR

APP Key	MRC	Mode Code	Requirements

Definition: THE STYLE DESIGNATION INDICATING THE CONFIGURATION THAT MOST NEARLY CORRESPONDS TO THE APPEARANCE OF THE ITEM.

Reply Instructions: Enter the group designator and applicable style number from Appendix B , Reference Drawing Group A. (e.g., STYLLA36*;

STYLLA5$$LA6*;

STYLLA8$LA36*)

EA*, EB* (See Note Preceding MRC AWPS)

ACSV	J	TUBE OUTSIDE DIAMETER FOR WHICH DESIGNED

Definition: THE LENGTH OF A STRAIGHT LINE WHICH PASSES THROUGH THE CENTER OF THE TUBE FOR WHICH DESIGNED, AND TERMINATES AT THE OUTSIDE CIRCUMFERENCE.

Reply Instructions: Enter the applicable Reply Codes from Tables 1 and 2 below, followed by the numeric value. (e.g., ACSVJAA0.500*; ACSVJLA12.7*; ACSVJAB0.500$$JAC0.505*;

ACSVJAA0.500$JAA0.750*)

Table 1

REPLY CODE	REPLY (AA05)
A	INCHES
L	MILLIMETERS

Table 2

REPLY CODE	REPLY (AC20)
A	NOMINAL
B	MINIMUM
C	MAXIMUM

EA*, EB* (See Note Preceding MRC AWPS)

AJES	J	HOSE OUTSIDE DIAMETER FOR WHICH DESIGNED

Definition: THE LENGTH OF A STRAIGHT LINE WHICH PASSES THROUGH THE CENTER OF THE HOSE FOR WHICH THE ITEM IS DESIGNED, AND TERMINATES AT THE OUTSIDE CIRCUMFERENCE.

APP Key	MRC	Mode Code	Requirements

Reply Instructions: Enter the applicable Reply Codes from Tables 1 and 2 below, followed by the numeric value. (e.g., AJESJAA1.250*; AJESJLA31.8*; AJESJAB1.125$$JAC1.250*;

AJESJAA1.450$JAA1.515*)

Table 1

REPLY CODE	REPLY (AA05)
A	INCHES
L	MILLIMETERS

Table 2

REPLY CODE	REPLY (AC20)
A	NOMINAL
B	MINIMUM
C	MAXIMUM

EA*, EB* (See Note Preceding MRC AWPS)

ABKV	J	OUTSIDE DIAMETER

Definition: THE LENGTH OF A STRAIGHT LINE WHICH PASSES THROUGH THE CENTER OF A CIRCULAR FIGURE OR BODY, AND TERMINATES AT THE OUTSIDE CIRCUMFERENCE.

Reply Instructions: Enter the applicable Reply Codes from Tables 1 and 2 below, followed by the numeric value. (e.g., ABKVJAA1.250*; ABKVJLA31.8*; ABKVJAB1.125$$JAC1.250*;

ABKVJAA1.250$JAA1.500*)

Table 1

REPLY CODE	REPLY (AA05)
A	INCHES
L	MILLIMETERS

Table 2

REPLY CODE	REPLY (AC20)
A	NOMINAL
B	MINIMUM
C	MAXIMUM

EA*, EB* (See Note Preceding MRC AWPS)

APP Key	MRC	Mode Code	Requirements
	AWME	J	NOMINAL HOSE SIZE FOR WHICH DESIGNED

Definition: THE INDUSTRIAL DESIGNATION OR TERM USED TO DEFINE THE DIAMETER OF A HOSE.

Reply Instructions: Enter the applicable Reply Code from the table below, followed by the numeric value. (e.g., AWMEJA0.500*; AWMEJL12.7*;

AWMEJA0.500$JA0.625*;

AWMEJL2.7$$JL3.0*)

REPLY CODE	REPLY (AA05)
A	INCHES
L	MILLIMETERS

EA*, EB* (See Note Preceding MRC AWPS)

	ACSU	J	NOMINAL PIPE SIZE FOR WHICH DESIGNED

Definition: THE INDUSTRIAL DESIGNATION OR TERM USED TO DEFINE THE NOMINAL DIAMETER OF PIPE FOR WHICH THE ITEM IS DESIGNED.

Reply Instructions: Enter the applicable Reply Code from the table below, followed by the numeric value. (e.g., ACSUJA0.375*; ACSUJL9.5*;

ACSUJA2.500$JA2.625*;

ACSUJL12.7$$JL13.0*)

REPLY CODE	REPLY (AA05)
A	INCHES
L	MILLIMETERS

EA*, EB* (See Note Preceding MRC AWPS)

	AWMF	J	INSIDE DIAMETER HOSE ACCOMMODATED

Definition: THE LENGTH OF A STRAIGHT LINE WHICH PASSES THROUGH THE CENTER OF THE ACCOMMODATION FOR A HOSE, AND TERMINATES AT THE INSIDE CIRCUMFERENCE.

APP Key	MRC	Mode Code	Requirements

Reply Instructions: Enter the applicable Reply Codes from Tables 1 and 2 below, followed by the numeric value. (e.g., AWMFJAA0.375*; AWMFJLA9.5*; AWMFJAB0.370$$JAC0.375*;

AWMFJLA1.2$JLA1.5*)

Table 1

REPLY CODE	REPLY (AA05)
A	INCHES
L	MILLIMETERS

Table 2

REPLY CODE	REPLY (AC20)
A	NOMINAL
B	MINIMUM
C	MAXIMUM

EA*, EB* (See Note Preceding MRC AWPS)

ABUJ A THREAD SIZE

Definition: DESIGNATES THE THREAD DIAMETER AND NUMBER OF THREADS PER SPECIFIC MEASUREMENT SCALE.

Reply Instructions: Enter the size.

(e.g., ABUJA1/2 IN.-20*;

ABUJA1/2 IN.-20$$A3/4 IN.-20*;

ABUJA1/2 IN.-20$A3/4 IN.-20*)

EA*, EB* (See Note Preceding MRC AWPS)

AWMG A EXTERNAL THREAD SIZE

Definition: DESIGNATES THE THREAD DIAMETER AND NUMBER OF THREADS PER MEASUREMENT SCALE OF AN EXTERNALLY THREADED ITEM.

Reply Instructions: Enter the size.

(e.g., AWMGA1/4 IN.-18*;

AWMGA1/4 IN.-18$$A3/8 IN.-18*;

APP Key	MRC	Mode Code	Requirements
	AWMGA1/4 IN.-18$A3/8 IN.-18*)		
EA*, EB* (See Note Preceding MRC AWPS)			
	AWMH	A	INTERNAL THREAD SIZE
	Definition: DESIGNATES THE THREAD DIAMETER AND NUMBER OF THREADS PER MEASUREMENT SCALE OF AN INTERNALLY THREADED ITEM.		
	Reply Instructions: Enter the size.		
	(e.g., AWMHA1 IN.-20*;		
	AWMHA1 IN.-20$$A1 IN.-22*;		
	AWMHA1 IN.-20$A1 IN.-22*)		
EA*, EB* (See Note Preceding MRC AWPS)			
	AJYP	D	SCREW THREAD SERIES DESIGNATOR
	Definition: A DESIGNATION DISTINGUISHING ONE GROUP OF SCREW THREAD DIAMETER-PITCH COMBINATIONS FROM ANOTHER BY THE NUMBER OF THREADS PER MEASUREMENT SCALE FOR A SPECIFIC DIAMETER.		
	Reply Instructions: Enter the applicable Reply Code from Appendix A , Table 6. (e.g., AJYPDBS*; AJYPDBS$DBT*;		
	AJYPDBS$$DBT*)		
EA*, EB* (See Note Preceding MRC AWPS)			
	AAJD	A	THREAD CLASS
	Definition: A NUMERIC-ALPHA DESIGNATOR INDICATING THE PITCH DIAMETER TOLERANCE AND AN EXTERNAL OR INTERNAL THREAD.		
	Reply Instructions: Enter the class. (e.g., AAJDA3A*;		
	AAJDA2A$$A3A*;		
	AAJDA2A$A3A*)		
EA*, EB* (See Note Preceding MRC AWPS)			

APP Key	MRC	Mode Code	Requirements
	AAJE	J	THREAD PITCH DIAMETERS

Definition: THE MINIMUM AND MAXIMUM PITCH DIAMETER LIMITS OF A STRAIGHT SCREW THREAD.

Reply Instructions: Enter the applicable Reply Code from the table below, followed by the numeric values. Precede each value with the letter P. (e.g., AAJEJAP0.065/P0.090*; AAJEJLP0.6/P0.9*;

AAJEJAP0.065/P0.090$$JAP0.090/P1.250*;

AAJEJAP0.065/P0.090$JAP0.090/P1.250*)

REPLY CODE	REPLY (AA05)
A	INCHES
L	MILLIMETERS

EA*, EB* (See Note Preceding MRC AWPS)

AAJF	D	THREAD DIRECTION

Definition: THE DIRECTION OF THE THREAD WHEN VIEWED AXIALLY. A RIGHT-HAND THREAD WINDS IN A CLOCKWISE DIRECTION WHILE A LEFT-HAND THREAD WINDS IN A COUNTERCLOCKWISE DIRECTION.

Reply Instructions: Enter the applicable Reply Code from the table below. (e.g., AAJFDR*;

AAJFDL$$DR*;

AAJFDL$DR*)

REPLY CODE	REPLY (AA38)
L	LEFT-HAND
R	RIGHT-HAND

EA*, EB* (See Note Preceding MRC AWPS)

AJFY	B	SEAT ANGLE IN DEG

Definition: THE ANGLE OF THE END SURFACE UPON WHICH THE MATED SURFACE SEATS, EXPRESSED IN DEGREES.

APP Key	MRC	Mode Code	Requirements

Reply Instructions: Enter the numeric value. (e.g., AJFYB45.0*;

AJFYB45.0$$B60.0*;

AJFYB40.0$B50.0*)

EA*, EB* (See Note Preceding MRC AWPS)

AJFZ J SEAT RADIUS

Definition: THE RADIUS OF THE END SURFACE UPON WHICH THE MATED SURFACE SEATS.

Reply Instructions: Enter the applicable Reply Codes from Tables 1 and 2 below, followed by the numeric value. (e.g., AJFZJAA0.125*; AJFZJLA3.1*; AJFZJAB0.120$$JAC0.125*;

AJFZJAA0.125$JAA0.150*)

Table 1

REPLY CODE	REPLY (AA05)
A	INCHES
L	MILLIMETERS

Table 2

REPLY CODE	REPLY (AC20)
A	NOMINAL
B	MINIMUM
C	MAXIMUM

EA*, EB* (See Note Preceding MRC AWPS)

AHSJ J LEG LENGTH

Definition: A MEASUREMENT OF THE LONGEST DIMENSION OF THE LEG, IN DISTINCTION FROM WIDTH.

Reply Instructions: Enter the applicable Reply Codes from Tables 1 and 2 below, followed by the numeric value. (e.g., AHSJJAA1.500*; AHSJJLA38.1*; AHSJJAB1.250$$JAC1.500*;

AHSJJLA4.0$JLA4.5*)

Table 1

REPLY CODE	REPLY (AA05)
A	INCHES

APP Key	MRC	Mode Code	Requirements
		L	MILLIMETERS

Table 2

REPLY CODE	REPLY (AC20)
A	NOMINAL
B	MINIMUM
C	MAXIMUM

EA*, EB* (See Note Preceding MRC AWPS)

AWMJ J RESTRICTION PASSAGE INSIDE DIAMETER

Definition: THE LENGTH OF A STRAIGHT LINE WHICH PASSES THROUGH THE CENTER OF THE RESTRICTION PASSAGE, AND TERMINATES AT THE INSIDE CIRCUMFERENCE.

Reply Instructions: Enter the applicable Reply Codes from Tables 1 and 2 below, followed by the numeric value. (e.g., AWMJJAA0.125*; AWMJJLA3.1*; AWMJJAB0.120$$JAC0.125*;

AWMJJAA0.125$JAA0.150*)

Table 1

REPLY CODE	REPLY (AA05)
A	INCHES
L	MILLIMETERS

Table 2

REPLY CODE	REPLY (AC20)
A	NOMINAL
B	MINIMUM
C	MAXIMUM

EA*, EB* (See Note Preceding MRC AWPS)

ABKU J FLANGE THICKNESS

Definition: A MEASUREMENT OF THE SMALLEST DIMENSION OF A FLANGE, IN DISTINCTION FROM LENGTH OR WIDTH.

Reply Instructions: Enter the applicable Reply Codes from Tables 1 and 2 below, followed by the numeric value. (e.g., ABKUJAA0.750*; ABKUJLA19.1*; ABKUJAB0.500$$JAC0.750*;

APP Key	MRC	Mode Code	Requirements

ABKUJLA1.2$JLA1.4*)

Table 1

REPLY CODE	REPLY (AA05)
A	INCHES
L	MILLIMETERS

Table 2

REPLY CODE	REPLY (AC20)
A	NOMINAL
B	MINIMUM
C	MAXIMUM

EA*, EB* (See Note Preceding MRC AWPS)

ADML A MOUNTING FLANGE BOLT HOLE QUANTITY

Definition: THE NUMBER OF BOLT HOLES IN THE MOUNTING FLANGE.

Reply Instructions: Enter the quantity. (e.g., ADMLA4*;

ADMLA4$$A6*;

ADMLA2$A4*)

EA*, EB* (See Note Preceding MRC AWPS)

ADMM J MOUNTING FLANGE BOLT HOLE DIAMETER

Definition: THE LENGTH OF A STRAIGHT LINE WHICH PASSES THROUGH THE CENTER OF A MOUNTING FLANGE BOLT HOLE, AND TERMINATES AT THE CIRCUMFERENCE.

Reply Instructions: Enter the applicable Reply Codes from Tables 1 and 2 below, followed by the numeric value. (e.g., ADMMJAA0.375*; ADMMJLA9.5*; ADMMJAB0.125$$JAC0.250*;

ADMMJAA0.375$JAA0.400*)

Table 1

REPLY CODE	REPLY (AA05)
A	INCHES
L	MILLIMETERS

Table 2

APP Key	MRC	Mode Code	Requirements

REPLY CODE	REPLY (AC20)
A	NOMINAL
B	MINIMUM
C	MAXIMUM

EA*, EB* (See Note Preceding MRC AWPS)

ADMN J MOUNTING FLANGE BOLT CIRCLE DIAMETER

Definition: THE LENGTH OF A STRAIGHT LINE WHICH PASSES THROUGH THE CENTER OF A MOUNTING FLANGE BOLT CIRCLE, AND TERMINATES AT THE CIRCUMFERENCE.

Reply Instructions: Enter the applicable Reply Codes from Tables 1 and 2 below, followed by the numeric value. (e.g., ADMNJAA1.275*; ADMNJLA32.3*; ADMNJAB1.125$$JAC1.250*;

ADMNJLA3.0$JAA4.5*)

Table 1

REPLY CODE	REPLY (AA05)
A	INCHES
L	MILLIMETERS

Table 2

REPLY CODE	REPLY (AC20)
A	NOMINAL
B	MINIMUM
C	MAXIMUM

EA*, EB* (See Note Preceding MRC AWPS)

ADME J MOUNTING FLANGE OUTSIDE DIAMETER

Definition: THE LENGTH OF A STRAIGHT LINE WHICH PASSES THROUGH THE CENTER OF A MOUNTING FLANGE, AND TERMINATES AT THE OUTSIDE CIRCUMFERENCE.

Reply Instructions: Enter the applicable Reply Codes from Tables 1 and 2 below, followed by the numeric value. (e.g., ADMEJAA1.500*; ADMEJLA38.1*; ADMEJAB1.250$$JAC1.500*;

ADMEJAA1.500$JAA1.750*)

APP Key	MRC	Mode Code	Requirements

Table 1

REPLY CODE	REPLY (AA05)
A	INCHES
L	MILLIMETERS

Table 2

REPLY CODE	REPLY (AC20)
A	NOMINAL
B	MINIMUM
C	MAXIMUM

EA*, EB* (See Note Preceding MRC AWPS)

AWMK D MOUNTING FLANGE SHAPE

Definition: THE PHYSICAL CONFIGURATION OF THE MOUNTING FLANGE.

Reply Instructions: Enter the applicable Reply Code from the table below. (e.g., AWMKDBT*; AWMKDBT$DRD*;

AWMKDRT$$DSQ*)

REPLY CODE	REPLY (AD07)
BT	OVAL
RT	RECTANGULAR
RD	ROUND
SQ	SQUARE
TR	TRIANGULAR

EA*, EB* (See Note Preceding MRC AWPS)

AWML J OVAL FLANGE BOLT CENTER

Definition: THE DIMENSION OF THE BOLT CENTER ON AN OVAL FLANGE.

Reply Instructions: Enter the applicable Reply Codes from Tables 1 and 2 below, followed by the numeric value. (e.g., AWMLJAA1.250*; AWMLJLA31.8*; AWMLJAB1.125$$JAC1.250*;

AWMLJAA1.250$JAA1.500*)

Table 1

REPLY CODE	REPLY (AA05)
A	INCHES

APP Key	MRC	Mode Code	Requirements
		L	MILLIMETERS

Table 2

REPLY CODE	REPLY (AC20)
A	NOMINAL
B	MINIMUM
C	MAXIMUM

EA*, EB* (See Note Preceding MRC AWPS)

AGSX J FLANGE OVERALL LENGTH

Definition: THE DIMENSION MEASURED ALONG THE LONGITUDINAL AXIS WITH TERMINATED POINTS AT THE EXTREME ENDS OF A FLANGE.

Reply Instructions: Enter the applicable Reply Codes from Tables 1 and 2 below, followed by the numeric value. (e.g., AGSXJAA2.250*; AGSXJLA57.1*; AGSXJAB2.125$$JAC2.250*;

AGSXJAA2.000$JAA2.500*)

For oval flanges, give the major axis.

Table 1

REPLY CODE	REPLY (AA05)
A	INCHES
L	MILLIMETERS

Table 2

REPLY CODE	REPLY (AC20)
A	NOMINAL
B	MINIMUM
C	MAXIMUM

EA

ASPS D SHUTOFF VALVE

Definition: AN INDICATION OF WHETHER OR NOT A SHUTOFF VALVE(S) IS PROVIDED.

Reply Instructions: Enter the applicable Reply Code from the table below. (e.g., ASPSDB*)

APP Key	MRC	Mode Code	Requirements

REPLY CODE	REPLY (AB22)
C	NOT PROVIDED
B	PROVIDED

EA

AWMM D EQUALIZING CONNECTION FEATURE

Definition: AN INDICATION OF WHETHER OR NOT AN EQUALIZING CONNECTION FEATURE IS INCLUDED.

Reply Instructions: Enter the applicable Reply Code from the table below. (e.g., AWMMDB*)

An equalizing connection is a valve connection leading from a liquid receiver to the suction line to prevent a pressure lock in the liquid receiver by causing high vapor pressure to discharge to the suction line.

REPLY CODE	REPLY (AA49)
B	INCLUDED
C	NOT INCLUDED

EA

AWMN D DRAIN CONNECTION

Definition: AN INDICATION OF WHETHER OR NOT A DRAIN CONNECTION IS INCLUDED.

Reply Instructions: Enter the applicable Reply Code from the table below. (e.g., AWMNDB*)

REPLY CODE	REPLY (AA49)
B	INCLUDED
C	NOT INCLUDED

EA

AWMP D SAFETY PLUG

APP Key	MRC	Mode Code	Requirements

Definition: AN INDICATION OF WHETHER OR NOT A SAFETY PLUG IS INCLUDED.

Reply Instructions: Enter the applicable Reply Code from the table below. (e.g., AWMPDB*)

REPLY CODE	REPLY (AA49)
B	INCLUDED
C	NOT INCLUDED

EA

AWMQ D LIQUID LEVEL INDICATOR

Definition: AN INDICATION OF WHETHER OR NOT A LIQUID LEVEL INDICATOR IS INCLUDED.

Reply Instructions: Enter the applicable Reply Code from the table below. (e.g., AWMQDB*)

REPLY CODE	REPLY (AA49)
B	INCLUDED
C	NOT INCLUDED

NOTE FOR MRC AWMR: IF REPLY CODE B IS ENTERED FOR MRC AWMQ, REPLY TO MRC AWMR.

EA* (See Note Above)

AWMR D LIQUID LEVEL INDICATOR TYPE

Definition: INDICATES THE TYPE OF LIQUID LEVEL INDICATOR.

Reply Instructions: Enter the applicable Reply Code from the table below. (e.g., AWMRDL*; AWMRDL$DM*)

REPLY CODE	REPLY (AD51)
L	MAGNETIC
M	SIGHT GLASS

EC*

APP Key	MRC	Mode Code	Requirements
	AKYD	G	ACCESSORY COMPONENTS AND QUANTITY

Definition: THE NAME AND NUMBER OF PARTS SUPPLIED WITH THE ITEM WHICH MAY BE REQUIRED FOR APPLICATION.

Reply Instructions: Enter the reply in clear text. (e.g., AKYDGCARRYING CASE*)

SECTION: F

APP Key	MRC	Mode Code	Requirements
ALL			
	NAME	D	ITEM NAME

Definition: A NOUN, WITH OR WITHOUT MODIFIERS, BY WHICH AN ITEM OF SUPPLY IS KNOWN.

Reply Instructions: Enter the applicable Item Name Code from the index appearing in the General Information Section. (e.g., NAMED36882*)

ALL

SHPE	D	SHAPE

Definition: THE PHYSICAL CONFIGURATION OF THE ITEM.

Reply Instructions: Enter the applicable Reply Code from the table below. (e.g., SHPEDAAB*)

REPLY CODE	REPLY (AD07)
AAB	A
AHT	HORIZONTAL RECTANGULAR
ALC	OVAL
APL	ROUND
BKZ	SLOPE
AYC	U

ALL

ALBY	D	USAGE DESIGN

Definition: INDICATES THE DESIGNED USE OF THE ITEM.

Reply Instructions: Enter the applicable Reply Code from the table below. (e.g., ALBYDBCH*; ALBYDBCG$$DBCK*; ALBYDBCH$DBCJ*)

REPLY CODE	REPLY (AH21)
BCF	AIR CONDITIONER
BCG	FREEZER
BCH	ICE CUBE MACHINE
BCJ	ICE FLAKE MACHINE
BCK	REFRIGERATION UNIT

APP Key	MRC	Mode Code	Requirements
ALL			
	AYTS	D	COOLING TYPE

Definition: INDICATES THE TYPE OF COOLING.

Reply Instructions: Enter the applicable Reply Code from the table below. (e.g., AYTSDAAB*)

REPLY CODE	REPLY (AB75)
AAB	AIR
ACN	WATER

NOTE FOR MRC AWCD: IF REPLY CODE ACN IS ANSWERED FOR MRC AYTS, REPLY TO MRC AWCD.

ALL * (See Note Above)

AWCD	D	WATER FOR WHICH DESIGNED

Definition: THE TYPE OF WATER WITH WHICH THE ITEM IS DESIGNED TO BE USED.

Reply Instructions: Enter the applicable Reply Code from the table below. (e.g., AWCDDAAC*; AWCDDAAC$DAAF*)

REPLY CODE	REPLY (AB75)
AAC	FRESH WATER
AAF	SALT WATER

FB

CWPT	A	TUBE ROW QUANTITY

Definition: THE NUMBER OF ROWS OF TUBES.

Reply Instructions: Enter the quantity. (e.g., CWPTA10*)

FA

AAYE	B	REFRIGERATION FLOW RATE IN TONS PER HOUR

APP Key	MRC	Mode Code	Requirements

Definition: THE REFRIGERATION CAPACITY OF THE ITEM AS RATED BY INDUSTRY, EXPRESSED IN TONS PER HOUR.

Reply Instructions: Enter the numeric value. (e.g., AAYEB0.500*; AAYEB150.000*)

For items that do not require a rating, change the Mode Code to K and enter Reply Code N. (e.g., AAYEKN*)

If rated in British Thermal Units, convert to tons of refrigeration. 12000 British Thermal Units per hour equal 1 ton of refrigeration.

FA

AAXT # J COOLING SYSTEM COOLANT FLOW RATE

Definition: THE AMOUNT OF COOLANT NECESSARY TO MAINTAIN THE REQUIRED OPERATING TEMPERATURE OF THE ITEM.

Reply Instructions: Enter the applicable Reply Code from the table below, followed by the numeric value. (e.g., AAXTJC3.0*)

REPLY CODE	REPLY (AC64)
C	CUBIC METERS PER MINUTE
E	LITERS PER MINUTE

ALL

AWGJ D TUBE MATERIAL

Definition: THE ELEMENT, COMPOUND, OR MIXTURE OF WHICH THE TUBE IS FABRICATED, EXCLUDING ANY SURFACE TREATMENT.

Reply Instructions: Enter the applicable Reply Code from Appendix A , Table 2. (e.g., AWGJDCU0000*; AWGJDCU0000$$DALC000*; AWGJDCU0000$DALC000*)

ALL *

CWPW D FIN MATERIAL

Definition: THE ELEMENT, COMPOUND, OR MIXTURE OF WHICH THE FIN IS FABRICATED, EXCLUDING ANY SURFACE TREATMENT.

Reply Instructions: Enter the applicable Reply Code from Appendix A , Table 2. (e.g., CWPWDALC000*; CWPWDALC000$$DCY0000*; CWPWDALC000$DCU0000*)

APP Key	MRC	Mode Code	Requirements
ALL			
	AAJU	J	OVERALL LENGTH

Definition: A MEASUREMENT OF THE LONGEST DIMENSION OF AN ITEM, IN DISTINCTION FROM WIDTH.

Reply Instructions: Enter the applicable Reply Code from the table below, followed by the numeric value. (e.g., AAJUJA14.000*; AAJUJL355.6*)

REPLY CODE	REPLY (AA05)
A	INCHES
L	MILLIMETERS

ALL

AAJV J OVERALL WIDTH

Definition: AN OVERALL MEASUREMENT TAKEN AT RIGHT ANGLES TO THE LENGTH OF AN ITEM, IN DISTINCTION FROM THICKNESS.

Reply Instructions: Enter the applicable Reply Code from the table below, followed by the numeric value. (e.g., AAJVJA12.000*; AAJVJL304.8*)

REPLY CODE	REPLY (AA05)
A	INCHES
L	MILLIMETERS

ALL

AAJT J OVERALL HEIGHT

Definition: THE DISTANCE MEASURED IN A STRAIGHT LINE FROM THE BOTTOM TO THE TOP OF AN ITEM.

Reply Instructions: Enter the applicable Reply Code from the table below, followed by the numeric value. (e.g., AAJTJA10.000*; AAJTJL254.0*)

REPLY CODE	REPLY (AA05)
A	INCHES
L	MILLIMETERS

APP Key	MRC	Mode Code	Requirements
ALL *			
	CWQS	J	INLET NOMINAL INSIDE DIAMETER

Definition: THE NOMINAL LENGTH OF A STRAIGHT LINE WHICH PASSES THROUGH THE CENTER OF THE INLET, AND TERMINATES AT THE INSIDE CIRCUMFERENCE.

Reply Instructions: Enter the applicable Reply Code from the table below, followed by the numeric value. (e.g., CWQSJA0.500*; CWQSJL12.7*)

REPLY CODE	REPLY (AA05)
A	INCHES
L	MILLIMETERS

ALL *

CWRC J INLET NOMINAL OUTSIDE DIAMETER

Definition: THE NOMINAL LENGTH OF A STRAIGHT LINE WHICH PASSES THROUGH THE CENTER OF THE INLET, AND TERMINATES AT THE OUTSIDE CIRCUMFERENCE.

Reply Instructions: Enter the applicable Reply Code from the table below, followed by the numeric value. (e.g., CWRCJA0.500*; CWRCJL12.7*)

REPLY CODE	REPLY (AA05)
A	INCHES
L	MILLIMETERS

ALL *

CWRN J OUTLET NOMINAL INSIDE DIAMETER

Definition: THE NOMINAL LENGTH OF A STRAIGHT LINE WHICH PASSES THROUGH THE CENTER OF THE OUTLET, AND TERMINATES AT THE INSIDE CIRCUMFERENCE.

Reply Instructions: Enter the applicable Reply Code from the table below, followed by the numeric value. (e.g., CWRNJA0.250*; CWRNJL6.3*)

REPLY CODE	REPLY (AA05)

APP Key	MRC	Mode Code	Requirements
		A	INCHES
		L	MILLIMETERS

ALL *

CWSD	J	OUTLET NOMINAL OUTSIDE DIAMETER

Definition: THE NOMINAL LENGTH OF A STRAIGHT LINE WHICH PASSES THROUGH THE CENTER OF THE OUTLET, AND TERMINATES AT THE OUTSIDE CIRCUMFERENCE.

Reply Instructions: Enter the applicable Reply Code from the table below, followed by the numeric value. (e.g., CWSDJA0.250*; CWSDJL6.3*)

REPLY CODE	REPLY (AA05)
A	INCHES
L	MILLIMETERS

SECTION: G

APP Key	MRC	Mode Code	Requirements
ALL			
	NAME	D	ITEM NAME

Definition: A NOUN, WITH OR WITHOUT MODIFIERS, BY WHICH AN ITEM OF SUPPLY IS KNOWN.

Reply Instructions: Enter the applicable Item Name Code from the index appearing in the General Information Section. (e.g., NAMED13452*)

ALL

ACKL	D	MEDIA FOR WHICH DESIGNED

Definition: THE TYPE OF SERVICE WITH WHICH THE ITEM IS DESIGNED TO BE USED.

Reply Instructions: Enter the applicable Reply Code from Appendix A , Table 1. (e.g., ACKLDCR*; ACKLDCR$$DCS*; ACKLDCR$DCS*)

ALL

AXGY	D	MOUNTING METHOD

Definition: THE MEANS OF ATTACHING THE ITEM.

Reply Instructions: Enter the applicable Reply Code from the table below. (e.g., AXGYDALQ*; AXGYDALQ$DALR*)

REPLY CODE	REPLY (AM39)
ANZ	FREE STANDING ON CASTERS
BCJ	SKID
ALQ	TRAILER
ALR	TRUCK

NOTE: IF REPLY CODE ALQ IS ENTERED FOR MRC AXGY, REPLY TO MRCS ABHP, ABKW, ADNM, AND CHKY AS APPLICABLE.

ALL * (See Note Above)

ABHP	J	OVERALL LENGTH

APP Key	MRC	Mode Code	Requirements

Definition: THE DIMENSION MEASURED ALONG THE LONGITUDINAL AXIS WITH TERMINATED POINTS AT THE EXTREME ENDS OF THE ITEM.

Reply Instructions: Enter the applicable Reply Codes from Tables 1 and 2 below, followed by the numeric value. (e.g., ABHPJAA8.000*; ABHPJLA196.0*; ABHPJAB7.500$$JAC8.000*)

Table 1

REPLY CODE	REPLY (AA05)
A	INCHES
L	MILLIMETERS

Table 2

REPLY CODE	REPLY (AC20)
A	NOMINAL
B	MINIMUM
C	MAXIMUM

ALL * (See Note Preceding MRC ABHP)

ABKW J OVERALL HEIGHT

Definition: THE DISTANCE MEASURED IN A STRAIGHT LINE FROM THE BOTTOM TO THE TOP OF AN ITEM.

Reply Instructions: Enter the applicable Reply Codes from Tables 1 and 2 below, followed by the numeric value. (e.g., ABKWJAA2.500*; ABKWJLA63.5*; ABKWJAB2.215$$JAC.375*)

Table 1

REPLY CODE	REPLY (AA05)
A	INCHES
L	MILLIMETERS

Table 2

REPLY CODE	REPLY (AC20)
A	NOMINAL
B	MINIMUM
C	MAXIMUM

ALL * (See Note Preceding MRC ABHP)

ADNM D FRAME MATERIAL

APP Key	MRC	Mode Code	Requirements

Definition: THE ELEMENT, COMPOUND, OR MIXTURE OF WHICH THE FRAME IS FABRICATED.

Reply Instructions: Enter the applicable Reply Code from Appendix A , Table 2. (e.g., ADNMDALC000*; ADNMDALC000$DAL0000*)

ALL * (See Note Preceding MRC ABHP)

CHKY D FRAME CONSTRUCTION

Definition: THE STRUCTURAL CHARACTERISTIC(s) OF THE FRAME.

Reply Instructions: Enter the applicable Reply Code from the table below. (e.g., CHKYDADH*; CHKYDAGR$$DADH*; CHKYDAGR$DAGS*)

REPLY CODE	REPLY (AL59)
AGR	BOLTED
AGS	RIVETED
ADH	WELDED

ALL *

BJNW J CABINET OVERALL WIDTH

Definition: AN OVERALL MEASUREMENT TAKEN AT RIGHT ANGLES TO THE LENGTH OF A CABINET, IN DISTINCTION FROM THICKNESS.

Reply Instructions: Enter the applicable Reply Codes from Tables 1 and 2 below, followed by the numeric value. (e.g., BJNWJA12.000*; BJNWJLA2.0*; BJNWJAB12.000$$JAC13.000*)

Table 1

REPLY CODE	REPLY (AA05)
A	INCHES
L	MILLIMETERS

Table 2

REPLY CODE	REPLY (AC20)
A	NOMINAL
B	MINIMUM
C	MAXIMUM

ALL *

APP Key	MRC	Mode Code	Requirements
	BJNX	J	CABINET OVERALL HEIGHT

Definition: THE DISTANCE MEASURED IN A STRAIGHT LINE FROM THE BOTTOM TO THE TOP OF THE CABINET.

Reply instructions: Enter the applicable Reply Codes from Tables 1 and 2 below, followed by the numeric value. (e.g., BJNXJAA12.000*; BJNXJAB12.000$$JAC13.000*; BJNXJLA3.0*)

Table 1

REPLY CODE	REPLY (AA05)
A	INCHES
L	MILLIMETERS

Table 2

REPLY CODE	REPLY (AC20)
A	NOMINAL
B	MINIMUM
C	MAXIMUM

ALL *

	BJMC	J	CABINET OVERALL LENGTH

Definition: THE DIMENSION MEASURED ALONG THE LONGITUDINAL AXIS WITH TERMINATED POINTS AT THE EXTREME ENDS OF THE CABINET.

Reply Instructions: Enter the applicable Reply Codes from Tables 1 and 2 below, followed by the numeric value. (e.g., BJMCJAA12.000*; BJMCJAB$$JAC13.000*; BJMCLA3.0*)

Table 1

REPLY CODE	REPLY (AA05)
A	INCHES
L	MILLIMETERS

Table 2

REPLY CODE	REPLY (AC20)
A	NOMINAL
B	MINIMUM
C	MAXIMUM

ALL *

APP Key	MRC	Mode Code	Requirements
	AZSB	D	CABINET MATERIAL

Definition: THE ELEMENT, COMPOUND, OR MIXTURE OF WHICH THE CABINET IS FABRICATED, EXCLUDING ANY SURFACE TREATMENT.

Reply Instructions: Enter the applicable Reply Code from Appendix A , Table 2. (e.g., AZSBDALC000*; AZSBDAL0000$DALC000*)

ALL

ATSZ	A	DOOR QUANITY

Definition: THE NUMBER OF DOORS PROVIDED.

Reply Instructions: Enter the quantity. (e.g., ATSZA4*)

ALL *

AKDJ	D	PRIME MOVER TYPE

Definition: INDICATES THE TYPE OF PRIME MOVER INCLUDED WITH THE UNIT.

Reply instructions: Enter the applicable Reply Code from the table below. (e.g., AKDJDAD*; AKDJDDD$DDR*)

REPLY CODE	REPLY (AG27)
AC	DIESEL ENGINE
AD	ELECTRIC MOTOR
DD	GASOLINE-ELECTRIC MOTOR
AE	GASOLINE ENGINE
DR	GENERATOR SET, DIESEL

ALL *

AWLX	A	ELECTRIC MOTOR QUANTITY

Definition: THE NUMBER OF ELECTRIC MOTORS PROVIDED.

Reply Instructions: Enter the quantity. (e.g., AWLXA1*)

ALL *

ACDC	D	CURRENT TYPE

APP Key	MRC	Mode Code	Requirements

Definition: INDICATES THE TYPE OF CURRENT WHETHER ALTERNATING, DIRECT, OR BOTH.

Reply Instructions: Enter the applicable Reply Code from the table below. (e.g., ACDCDB*; ACDCDB$DC*)

REPLY CODE	REPLY (AB62)
B	AC
D	AC/DC
C	DC

ALL *

CSBH J VOLTAGE IN VOLTS AND CURRENT TYPE

Definition: THE TOTAL ELECTRIC VOLTAGE, EXPRESSED IN VOLTS, AND THE TYPE OF CURRENT WHETHER ALTERNATING OR DIRECT.

Reply Instructions: Enter the applicable Reply Code from the table below, followed by the numeric value. (e.g., CSBHJAC6.5*; CSBHJAC6.5$$JAC7.0*; CSBHJAC6.5$JDC7.0*)

REPLY CODE	REPLY (AN87)
AC	AC
DC	DC

NOTE FOR MRC FREQ AND FAAZ: IF REPLY CODE AC IS ANSWERED FOR MRC CSBH, REPLY TO MRCS FREQ AND FAAZ.

ALL * (See Note Above)

FREQ B FREQUENCY IN HERTZ

Definition: THE CYCLES PER SECOND (HERTZ) OF THE ALTERNATING CURRENT.

Reply Instructions: Enter the numeric value. (e.g., FREQB60.0*; FREQB50.0$B60.0*)

ALL * (See Note Preceding MRC FREQ)

FAAZ D PHASE

APP Key	MRC	Mode Code	Requirements

Definition: THE NUMBER OF ALTERNATING CURRENT PHASES.

Reply Instructions: Enter the applicable Reply Code from the table below. (e.g., FAAZDA*; FAAZDB$DC*)

REPLY CODE	REPLY (AD02)
A	SINGLE
C	THREE
B	TWO

ALL *

AKYD	G	ACCESSORY COMPONENTS AND QUANTITY

Definition: THE NAME AND NUMBER OF PARTS SUPPLIED WITH THE ITEM WHICH MAY BE REQUIRED FOR APPLICATION.

Reply Instructions: Enter the reply in clear text. (e.g., AKYDGONE CHARGING CYLINDER*)

SECTION: STANDARD

APP Key	MRC	Mode Code	Requirements

NOTE FOR MRCS CBBL AND FEAT: E MODE REPLIES WILL NOT BE ACCEPTABLE IN REPLY TO MRC CBBL. IF A REPLY IS NOT REFLECTED ON THE TABLE FOR MRC CBBL, ENTER THE FEATURE IN REPLY TO MRC FEAT.

ALL * (See Note Above)

CBBL D FEATURES PROVIDED

Definition: THOSE FEATURES, NOT OTHERWISE SPECIFIED, WHICH MAY BE REQUIRED FOR PROPER FUNCTIONING OF THE ITEM.

Reply Instructions: Enter the applicable Reply Code from the table below. (e.g., CBBLDCQA*)

REPLY CODE	REPLY (AN47)
CZP	CABINET
CQA	DRUM
CQB	GRID
CQC	INTEGRAL AUGER

ALL * (See Note Preceding MRC CBBL)

FEAT G SPECIAL FEATURES

Definition: THOSE UNUSUAL OR UNIQUE CHARACTERISTICS OR QUALITIES OF AN ITEM NOT COVERED IN THE OTHER REQUIREMENTS AND WHICH ARE DETERMINED TO BE ESSENTIAL FOR IDENTIFICATION.

Reply Instructions: Enter the reply in clear text. Separate multiple replies with a semicolon. (e.g., FEATGADJUSTABLE NOSE CLIP*; FEATGADJUSTABLE NOSE PIECE; DISPOSABLE*)

ALL*

TEST J TEST DATA DOCUMENT

APP Key	MRC	Mode Code	Requirements

Definition: THE SPECIFICATION, STANDARD, DRAWING, OR SIMILAR INSTRUMENT THAT SPECIFIES ENVIRONMENTAL AND PERFORMANCE REQUIREMENTS OR TEST CONDITIONS UNDER WHICH AN ITEM IS TESTED AND ESTABLISHES ACCEPTABLE LIMITS WITHIN WHICH THE ITEM MUST CONFORM IDENTIFIED BY AN ALPHABETIC AND/OR NUMERIC REFERENCE NUMBER. INCLUDES THE COMMERCIAL AND GOVERNMENT ENTITY (CAGE) CODE OF THE ENTITY CONTROLLING THE INSTRUMENT.

Reply Instructions: Enter the applicable Reply Code from the table below, followed by the 5-position CAGE Code, a dash, and the document identification number.

(e.g., TESTJA12345-CWX654321*;

TESTJA1234A-654321$$JB5556A-663654*;

TESTJAA2345-654321$JB55566-663654*)

REPLY CODE	REPLY (AC28)
A	SPECIFICATION (Includes engineering type bulletins, brochures, etc., that reflect specification type data in specification format; excludes commercial catalogs, industry directories, and similar trade publications, reflecting general type data on certain environmental and performance requirements and test conditions that are shown as "typical," "average," "nominal," etc.)
B	STANDARD (Includes industry or association standards, individual manufacturer standards, etc.)
C	DRAWING (This is the basic governing drawing, such as a contractor drawing, original equipment manufacturer drawing, etc.; excludes any specification, standard, or other document that may be referenced in a basic governing drawing)

ALL*

SPCL	G	SPECIAL TEST FEATURES

Definition: TEST CONDITIONS AND RATINGS, OR ENVIRONMENTAL AND PERFORMANCE REQUIREMENTS THAT ARE DIFFERENT, MORE CRITICAL, OR MORE SPECIFIC THAN THOSE SPECIFIED IN A GOVERNING TEST DATA DOCUMENT.

APP Key	MRC	Mode Code	Requirements
	Reply Instructions: Enter the reply in clear text. (e.g., SPCLGSELECTED AND TESTED FOR NAVIGATIONAL SYSTEMS*)		
ALL*			
	ZZZK	J	SPECIFICATION/STANDARD DATA

Definition: THE DOCUMENT DESIGNATOR OF THE SPECIFICATION OR STANDARD WHICH ESTABLISHED THE ITEM OF SUPPLY.

Reply Instructions: Enter the applicable Reply Code from the table below, followed by the Commercial and Government Entity (CAGE) Code of the entity controlling the document, a dash, and the document designator. The agency that controls the limited coordination document must be preceded and followed by a slash following the designator. The word canceled or superseded must be preceded and followed by a slash for the designator. Professional and industrial association specifications/standards are differentiated from a manufacturer's specification in that the data has been coordinated and published by the professional and industrial association. Include amendments and revisions where applicable.

(e.g., ZZZKJT81337-30642B*;

ZZZKJS81349-MIL-D-180 REV1/CANCELED/*;

ZZZKJP80205-NAS1103*;

ZZZKJS81349-MIL-C-1140C/CE/*;

ZZZKJT81337-30642B$$JP80205-NAS1103*)

REPLY CODE	REPLY (AN62)
S	GOVERNMENT SPECIFICATION
T	GOVERNMENT STANDARD
D	MANUFACTURERS SOURCE CONTROL
R	MANUFACTURERS SPECIFICATION
N	MANUFACTURERS SPECIFICATION CONTROL
M	MANUFACTURERS STANDARD
B	NATIONAL STD/SPEC
A	PROFESSIONAL/INDUSTRIAL ASSOCIATION SPECIFICATION
P	PROFESSIONAL/INDUSTRIAL ASSOCIATION STANDARD

APP Key	MRC	Mode Code	Requirements

NOTE FOR MRC ZZZT: IF THE SPECIFICIATION/STANDARD CITED IN REPLY TO MRC ZZZK IS NONDEFINITIVE, REPLY TO MRC ZZZT. THIS REPLY IS THE DATA WHICH IS NOT RECORDED IN SEGMENT C.

ALL * (See Note Above)

ZZZT J NONDEFINITIVE SPEC/STD DATA

Definition: THE NUMBER, LETTER, OR SYMBOL THAT INDICATES THE TYPE, STYLE, GRADE, CLASS, AND THE LIKE, OF AN ITEM IN A NONIDENTIFYING SPECIFICATION OR STANDARD.

Reply Instructions: Enter the applicable Reply Code from Appendix A , Table 4, followed by the appropriate number, letter, or symbol. (e.g., ZZZTJTY1*; ZZZTJTY1$$JSTA*; ZZZTJTY1$JSTA*)

ALL*

ZZZW G DEPARTURE FROM CITED DOCUMENT

Definition: THE TECHNICAL DIFFERENTIATING CHARACTERISTIC(S) OF AN ITEM OF SUPPLY WHICH DEPART(S) FROM THE TEXT OF A SPECIFICATION OR A STANDARD IN THAT IT REPRESENTS A SELECTION OF CHARACTERISTICS STATED IN THE SPECIFICATION OR STANDARD AS BEING OPTIONAL, OR A VARIATION FROM ONE OR MORE OF THE STATED CHARACTERISTICS, OR AN ADDITIONAL CHARACTERISTIC NOT STATED IN THE SPECIFICATION OR STANDARD.

Reply Instructions: Enter the reply in clear text. (e.g., ZZZWGAS MODIFIED BY MATERIAL*)

ALL*

ZZZX G DEPARTURE FROM CITED DESIGNATOR

Definition: THE VARIATION WHEN THE ITEM IS IN CONFORMITY WITH A TYPE DESIGNATOR COVERED BY A SPECIFICATION OR STANDARD, EXCEPT IN REGARD TO ONE OR MORE TECHNICAL DIFFERENTIATING CHARACTERISTICS.

Reply Instructions: Enter the reply in clear text. (e.g., ZZZXGAS MODIFIED BY MATERIAL*)

ALL*

APP Key	MRC	Mode Code	Requirements
	ZZZY	G	REFERENCE NUMBER DIFFERENTIATING CHARACTERISTICS

Definition: A FEATURE OF THE ITEM OF SUPPLY WHICH MUST BE SPECIFICALLY RECORDED WHEN THE REFERENCE NUMBER COVERS A RANGE OF ITEMS.

Reply Instructions: Enter the reply in clear text. (e.g., ZZZYGCOLOR CODED LEADS*; ZZZYGAS DIFFERENTIATED BY MATERIAL*)

ALL*

	CRTL	A	CRITICALITY CODE JUSTIFICATION

Definition: THE MASTER REQUIREMENT CODES OF THOSE REQUIREMENTS WHICH ARE TECHNICALLY CRITICAL BY REASON OF TOLERANCE, FIT, PERFORMANCE, OR OTHER CHARACTERISTICS WHICH AFFECT IDENTIFICATION OF THE ITEM.

Reply Instructions: Enter the Master Requirement Code for the requirement, the reply to which renders the item as being critical. (e.g., CRTLAMATL*; CRTLAMATL$$ASURF*)

Reply to this requirement only if the header record for the item identification for the item being identified has been coded as critical.

NOTE FOR MRC PRPY: IF DOCUMENT AVAILABILITY CODE B, D, F, OR H, REPLY TO MRC PRPY.

ALL* (See Note Above)

	PRPY	A	PROPRIETARY CHARACTERISTICS

Definition: IDENTIFICATION OF THOSE CHARACTERISTICS INCLUDED IN THE DESCRIPTION FOR WHICH A NON-GOVERNMENT ACTIVITY HAS IDENTIFIED ALL OR SELECTED CHARACTERISTICS OF THE ITEM AS BEING PROPRIETARY AND THEREFORE RESTRICTED FROM RELEASE OUTSIDE THE GOVERNMENT WITHOUT PRIOR PERMISSION OF THE ORIGINATOR OF THE DATA.

APP Key	MRC	Mode Code	Requirements

Reply Instructions: Enter the MRC codes of the individual characteristics of the description which are marked proprietary on the technical data, using AND coding ($$) for multiple characteristics. If all the MRCs are proprietary, enter the reply PACS. If none of the MRCs is proprietary, enter the reply NPAC. (e.g., PRPYAPACS*; PRPYANPAC*; PRPYAMATL$$ASURF*)

NOTE FOR MRC ENAC: ANSWERING THIS MRC WILL GENERATE AN ENAC CODE IN THE ITEM IDENTIFICATION SEGMENT (A) OF THE NSN.

ALL * (See Note Above)

ENAC D ENVIRONMENTAL ATTRIBUTE CODE

Definition: INDICATES THE TYPE OF PRODUCT THAT MEETS OR EXCEEDS THE GOVERNMENT GUIDELINES FOR ENVIRONMENTALLY PREFERRED CHARACTERISTICS.

Reply Instructions: Enter the applicable Reply Code from the table below. (e.g., ENACDJU*)

REPLY CODE	REPLY (EN02)
JU	ENERGY EFFICIENT — COMMERCIAL HVAC EQUIPMENT — WATER-COOLED CHILLERS
XX	REVIEWED — DOES NOT MEET SOME ENAC CRITERIA

ALL*

ELRN G EXTRA LONG REFERENCE NUMBER

Definition: A REFERENCE NUMBER EXCEEDING 32 POSITIONS.

Reply Instructions: Enter the entire reference number. Do not include the 5-position Commercial and Government Entity (CAGE) Code unless there is more than one extra long reference number on the NSN, (e.g., ELRNGANN112036BIL060557LEN313605UZ62365*).

If there is more than one extra long reference number on the NSN, include the CAGE or NCAGE and separate each reference by using the "&" character, (e.g., 28480 ANN112036BIL060557LEN313605UZ62365 & S1234 NN112036BIL060557LEN313605UZ62365).

APP Key	MRC	Mode Code	Requirements
	In determining quantity of characters in the reference number, count will be made after modification in accordance with Volume 2, Chapter 9, FLIS Procedures Manual, DoD 4100.39-M.		

NOTE FOR MRC NHCF: IF THE CRITICALITY CODE IS E, H, OR M, REPLY TO MRC NHCF.

ALL* (See Note Above)

NHCF	D	NUCLEAR HARDNESS CRITICAL FEATURE

Definition: AN INDICATION OF THE NUCLEAR HARDNESS CRITICALITY OF THE ITEM.

Reply Instructions: Enter the Reply Code from the table below. (e.g., NHCFDCY*)

REPLY CODE	REPLY (AD05)
CY	HARDENED

ALL*

ELCD	D	EXTRA LONG CHARACTERISTIC DESCRIPTION

Definition: A DESCRIPTION THAT EXCEEDS 5000 CHARACTERS.

Reply Instructions: Enter the Reply Code from the table below. (e.g., ELCDDA*)

REPLY CODE	REPLY (AN58)
A	ADDITIONAL DESCRIPTIVE DATA ON MANUAL RECORD

SECTION: SUPPTECH

APP Key	MRC	Mode Code	Requirements
ALL			
	AFJK	J	CUBIC MEASURE

Definition: A MEASUREMENT OF VOLUME TAKEN BY MULTIPLYING THE LENGTH BY THE WIDTH BY THE HEIGHT OF AN ITEM AND RENDERED IN CUBIC UNITS.

Reply Instructions: Enter the applicable Reply Code from the table below, followed by the numeric value. (e.g., AFJKJB8.000*; AFJKJC131.1*)

REPLY CODE	REPLY (AD42)
C	CUBIC CENTIMETERS
B	CUBIC INCHES

ALL

SUPP	G	SUPPLEMENTARY FEATURES

Definition: CHARACTERISTICS OR QUALITIES OF AN ITEM, NOT COVERED IN ANY OTHER REQUIREMENT, WHICH ARE CONSIDERED ESSENTIAL INFORMATION FOR ONE OR MORE FUNCTIONS EXCLUDING NSN ASSIGNMENT.

Reply Instructions: Enter the reply in clear text. (e.g., SUPPGMAY INCL HOLE IN UPPER SUPPORT FOR MTG DURING SHIPMENT*)

ALL

AGAV	G	END ITEM IDENTIFICATION

Definition: THE NATIONAL STOCK NUMBER OR THE IDENTIFICATION INFORMATION OF THE END EQUIPMENT FOR WHICH THE ITEM IS A PART.

Reply Instructions: Enter the reply in clear text.

(e.g., AGAVG3930-00-000-0000*;

AGAVGFORKLIFT TRUCK, SMITH CORPORATION, MODEL 12, TYPE A*)

ALL

ZZZV	G	FSC APPLICATION DATA

APP Key	MRC	Mode Code	Requirements

Definition: THE JUSTIFICATION FOR THE ASSIGNMENT OF A FEDERAL SUPPLY CLASS (FSC) TO AN ITEM BASED ON THE CLASSIFICATION OF THE NEXT HIGHER CLASSIFIABLE ASSEMBLY.

Reply Instructions: Enter the name of the next higher classifiable assembly in clear text. (e.g., ZZZVGFUEL SYSTEM, GASOLINE ENGINE, NONAIRCRAFT*)

ALL

HZRD	D	HAZARDOUS SUBSTANCES

Definition: THE SUBSTANCES AND/OR MATERIALS CONTAINED IN THE ITEM THAT HAVE BEEN IDENTIFIED AS HAZARDOUS OR ENVIRONMENTALLY DAMAGING BY THE ENVIRONMENTAL PROTECTION AGENCY OR OTHER AUTHORIZED GOVERNMENT AGENCY.

Reply Instructions: Enter the applicable Reply Code from the table below. (e.g., HZRDDHAZ070*; HZRDDHAZ070$$DHAZ078*)

REPLY CODE	REPLY (HZ00)
HAZ072	REFRIGERANT GAS, R 12
HAZ068	REFRIGERANT GAS, R 13
HAZ082	REFRIGERANT GAS, R 14
HAZ076	REFRIGERANT GAS, R 21
HAZ070	REFRIGERANT GAS, R 114
HAZ066	REFRIGERANT GAS, R 115
HAZ078	REFRIGERANT GAS, R 116
HAZ074	REFRIGERANT GAS, R 500
HAZ064	REFRIGERANT GAS, R 502

ALL *

CXCY	G	PART NAME ASSIGNED BY CONTROLLING AGENCY

Definition: THE NAME ASSIGNED TO THE ITEM BY THE GOVERNMENT AGENCY OR COMMERCIAL ORGANIZATION CONTROLLING THE DESIGN OF THE ITEM.

Reply Instructions: Enter the reply in clear text. (e.g., CXCYGLINE PROCESSOR CONTROL BOARD*)

FIIG T
Section Parts

[Blank Page]

Reply Tables

Table 1 - MEDIA FOR WHICH DESIGNED 111
Table 2 - MATERIALS 111
Table 3 - CONNECTION TYPES 112
Table 4 - NONDEFINITIVE SPEC/STD DATA 112
Table 5 - END CONNECTION TYPES 114
Table 6 - THREAD SERIES 115

Table 1 - MEDIA FOR WHICH DESIGNED

MEDIA FOR WHICH DESIGNED

REPLY CODE	REPLY (AB75)
AB	AIR
AF	AMMONIA
A	ANY ACCEPTABLE
KM	CHILLED WATER
ES #	FREON
	Freon 11 (trichlorodifluoromethane) (use Reply Code CR)
	Freon 12 (dichlorodifluoromethane) (use Reply Code CS)
	Freon 22 (monochlorodifluoromethane) (use Reply Code CU)
EF	METHYL CHLORIDE, GAS
EG	METHYL CHLORIDE, LIQUID
KW	METHYL CHLORIDE, TECHNICAL
KP	REFRIGERANT VAPOR
CR	REFRIGERANT 11
CS	REFRIGERANT 12
CT	REFRIGERANT 13
CU	REFRIGERANT 22
CX	REFRIGERANT 500
CY	REFRIGERANT 502
KQ	VAPOR
DF	WATER

Table 2 - MATERIALS

MATERIALS

REPLY CODE	REPLY (AD09)
ALC000	ALUMINUM
AL0000	ALUMINUM ALLOY
A	ANY ACCEPTABLE
BR0000	BRASS
BN0000	BRONZE
	Cast Aluminum (use Reply Code AL0000)
CU0000	COPPER
	Copper and Aluminum (use Reply Codes CU0000 and ALC000)
KN0000	COPPER NICKEL ALLOY
CUH000	COPPER-SILICON ALLOY
CU0334	COPPER, WW-T-799, TYPE K
FA0000	FABRIC
MEF000	GUNMETAL
FE0000	IRON
	Iron, Cast (use Reply Code FE0000)
NF0000	NICKEL
NFS000	NICKEL BRONZE

REPLY CODE	REPLY (AD09)
NC0000	NICKEL COPPER ALLOY (MONEL)
RC0000	RUBBER
RCC000	RUBBER, SYNTHETIC
ST0000	STEEL
STB000	STEEL, CORROSION RESISTING
ST0597	STEEL, GALVANIZED
	STEEL, STAINLESS (use Reply Code STB000)

Table 3 - CONNECTION TYPES

CONNECTION TYPES

REPLY CODE	REPLY (AB76)
A	ANY ACCEPTABLE
BD	BUTT WELD PIPE
BQ	COPPER TUBE
BR	COPPER TUBING, ENDS SEALED
BF	FLANGE
BS	FLANGE UNION
BT	FLANGED, ENDS SEALED
BW	FLARE TUBE
BX	PIPE
BZ	SWEAT FLANGE
BY	SWEATED TUBE
CA	THREAD
CB	THREADED PIPE
CC	TUBE
RY	TUBE COUPLING NUT

Table 4 - NONDEFINITIVE SPEC/STD DATA

NONDEFINITIVE SPEC/STD DATA

REPLY CODE	REPLY (AD08)
AL	ALLOY
AN	ANNEX
AP	APPENDIX
AC	APPLICABILITY CLASS
AR	ARRANGEMENT
AS	ASSEMBLY
AB	ASSORTMENT
BX	BOX
CY	CAPACITY
CA	CASE
CT	CATEGORY
CL	CLASS
CE	CODE
CR	COLOR

REPLY CODE	REPLY (AD08)
CC	COMBINATION CODE
CN	COMPONENT
CP	COMPOSITION
CM	COMPOUND
CD	CONDITION
CS	CONSTRUCTION
DE	DESIGN
DG	DESIGNATOR
DW	DRAWING NUMBER
EG	EDGE
EN	END
FY	FAMILY
FG	FIGURE
FN	FINISH
FM	FORM
FA	FORMULA
GR	GRADE
GP	GROUP
BA	IMAGE COLOR
NS	INSERT
TM	ITEM
KD	KIND
KT	KIT
LG	LENGTH
LT	LIMIT
MK	MARK
AA	MARKER
ML	MATERIAL
BB	MAXIMUM DENSITY
MH	MESH
ME	METHOD
BC	MINIMUM DENSITY
MD	MODEL
MT	MOUNTING
NR	NUMBER
PT	PART
PN	PATTERN
PC	PHYSICAL CONDITION
PS	PIECE
PL	PLAN
PR	POINT
QA	QUALITY
RN	RANGE
RT	RATING
RF	REFERENCE NUMBER
SC	SCHEDULE
SB	SECTION
SL	SELECTION

REPLY CODE	REPLY (AD08)
SE	SERIES
SV	SERVICE
SX	SET
SA	SHADE
SH	SHAPE
SG	SHEET
SZ	SIZE
PZ	SPECIES
SQ	SPECIFICATION SHEET
SD	SPEED
ST	STYLE
SS	SUBCLASS
SF	SUBFORM
SP	SUBTYPE
SN	SURFACE CONDITION
SY	SYMBOL
SM	SYSTEM
TB	TABLE
TN	TANNAGE
TP	TEMPER
TX	TEXTURE
TK	THICKNESS
TT	TREATMENT
TR	TRIM
TY	TYPE
YN	UNIT
VA	VARIETY
WT	WEIGHT
WD	WIDTH

Table 5 - END CONNECTION TYPES
(USE FOR APPLICABILITY KEY EA ONLY)

END CONNECTION TYPES

REPLY CODE	REPLY (AB76)
AN	BUTT WELD
AM	PLAIN FACE FLANGE
AL	RAISED FACE FLANGE
AK	RECESSED FLANGE
AH	THREADED EXTERNAL AND INTERNAL PIPE
AW	THREADED EXTERNAL BOSS
AU	THREADED EXTERNAL GAS CYLINDER
AR	THREADED EXTERNAL HOSE
AG	THREADED EXTERNAL PIPE
AC	THREADED EXTERNAL TUBE
AV	THREADED INTERNAL BOSS

REPLY CODE	REPLY (AB76)
AT	THREADED INTERNAL GAS CYLINDER
AP	THREADED INTERNAL HOSE
AE	THREADED INTERNAL PIPE
AA	THREADED INTERNAL TUBE
AS	UNTHREADED EXTERNAL HOSE
AJ	UNTHREADED EXTERNAL PIPE
AD	UNTHREADED EXTERNAL TUBE
AQ	UNTHREADED INTERNAL HOSE
AB	UNTHREADED INTERNAL TUBE THREAD SERIES

Table 6 - THREAD SERIES

THREAD SERIES

REPLY CODE	REPLY (AH06)
AM	ACME
AC	ACME C
AG	ACME G
AN	ANPT
BA	BA
BF	BSF
BE	BSP.F EXT
BT	BSP.F INT
BL	BSP.PL EXT
BN	BSP.PL INT
BS	BSP.TR EXT
BR	BSP.TR INT
BW	BSW
TT	BUTTRESS
CT	CUTTING
DR	DRIVE
FP	F-PTF
FM	FORMING
SM	ISO M (SI other than coarse)
SS	ISO S (SI coarse)
NG	NGO
GS	NGS
GT	NGT
NH	NH
	Nonstandard (use Reply Code NS)
SP	NPS
SC	NPSC
SF	NPSF
SH	NPSH
PS	NPSI
SL	NPSL
PM	NPSM
NP	NPT

REPLY CODE	REPLY (AH06)
NT	NPTF
TR	NPTR
TS	NPTS
PT	PTF-SAE SHORT
PP	PTF-SPL
PE	PTF-SPL EXTRA SHORT
PF	PTF-SPL SHORT
SW	SAE
SG	SGT
SQ	SQUARE
SA	STUB ACME
UN	UN (8, 12, and 16 pitch)
NC	UNC
NE	UNEF
NF	UNF
NJ	UNJ (8, 12, and 16 pitch)
JC	UNJC
JE	UNJEF
JF	UNJF
NM	UNM
NS	UNS (national special)
WW	WHITWORTH

Reference Drawing Groups

REFERENCE DRAWING GROUP A 119

REFERENCE DRAWING GROUP A

END CONNECTION STYLES

THREADED INTERNAL

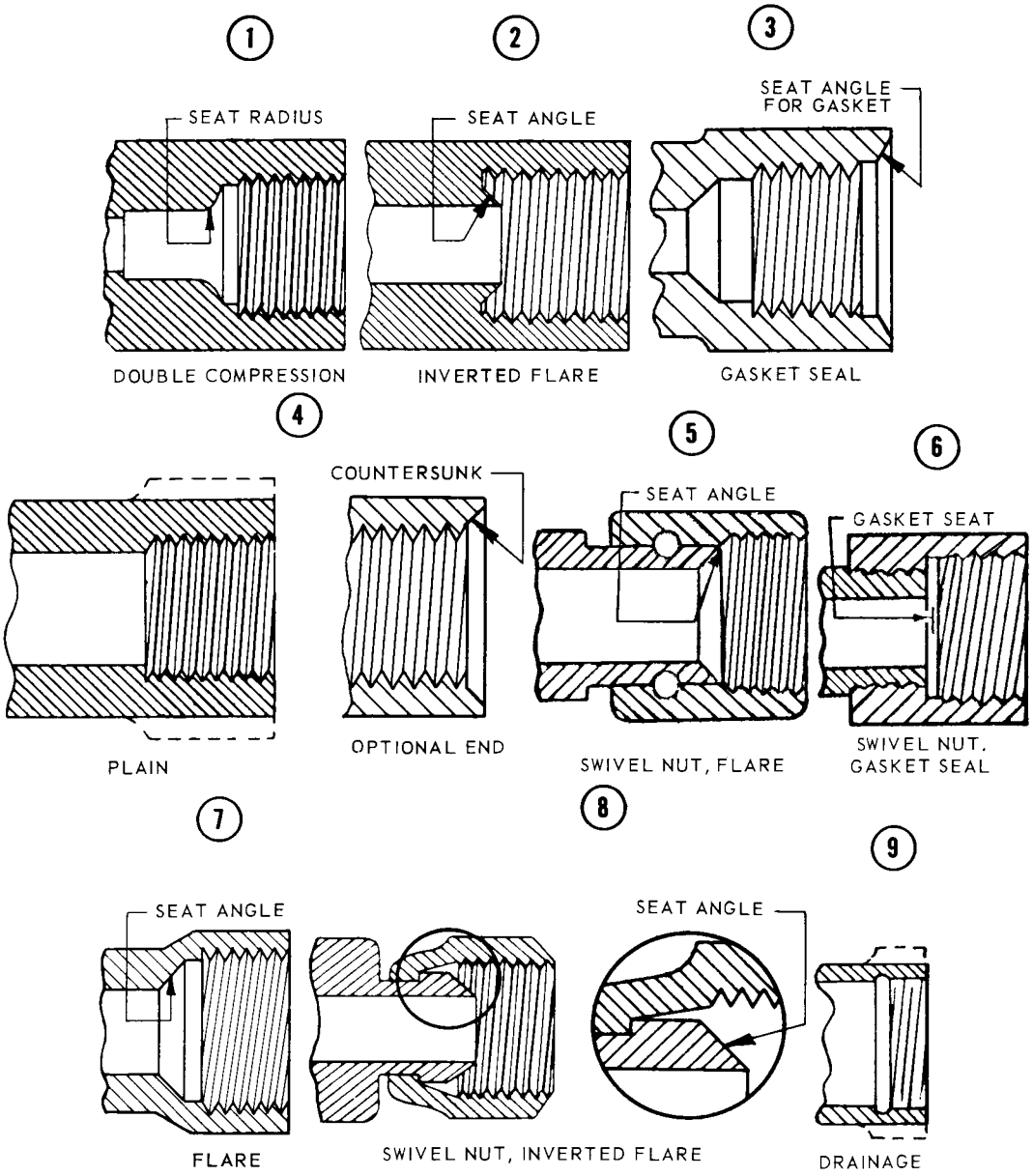

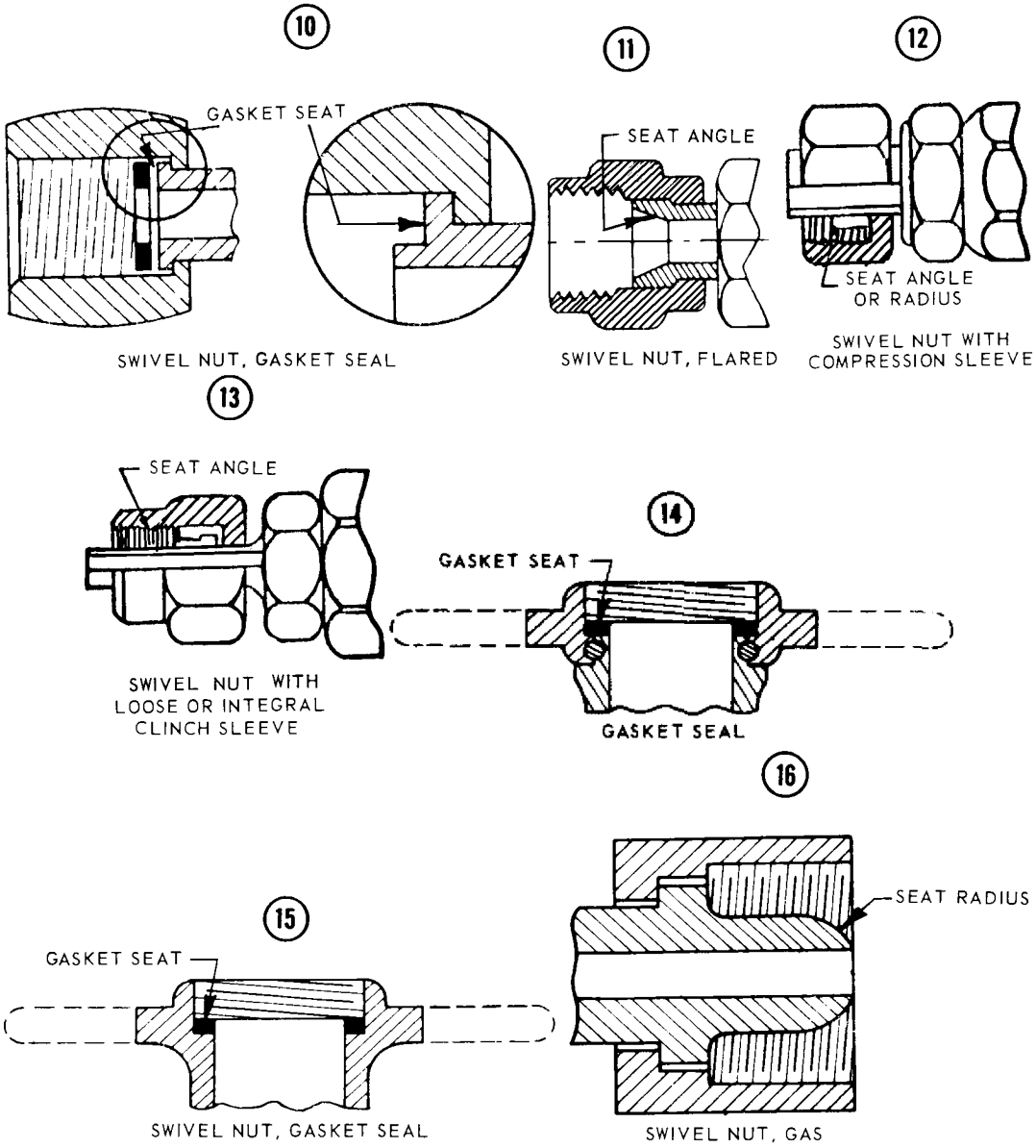
10
GASKET SEAT
SWIVEL NUT, GASKET SEAL
11
SEAT ANGLE
SWIVEL NUT, FLARED
12
SEAT ANGLE
OR RADIUS
SWIVEL NUT WITH
COMPRESSION SLEEVE
13
SEAT ANGLE
SWIVEL NUT WITH
LOOSE OR INTEGRAL
CLINCH SLEEVE
14
GASKET SEAT
GASKET SEAL
15
GASKET SEAT
SWIVEL NUT, GASKET SEAL
16
SEAT RADIUS
SWIVEL NUT, GAS

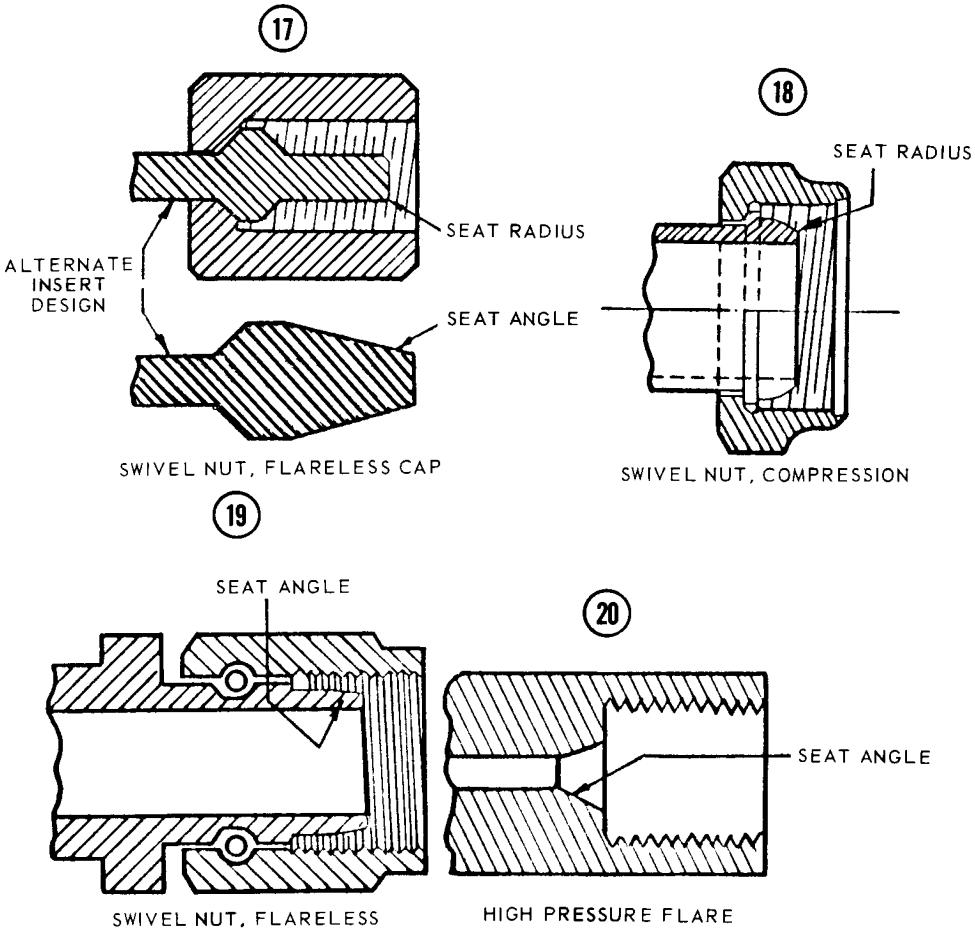

END CONNECTION STYLES

UNTHREADED INTERNAL

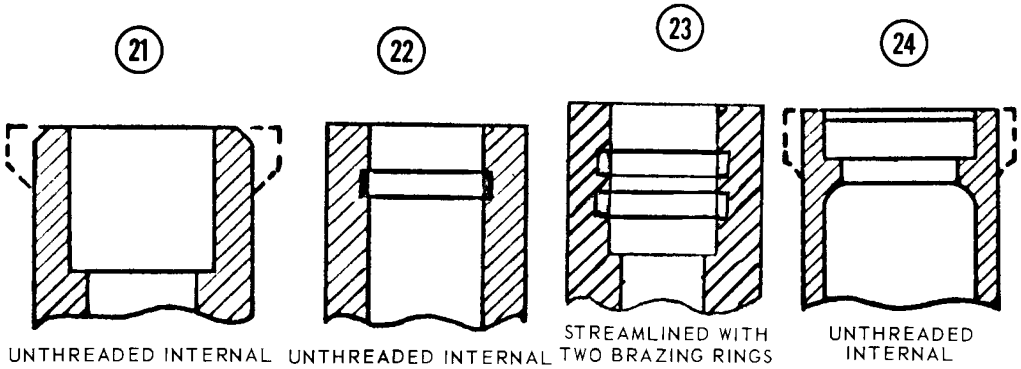

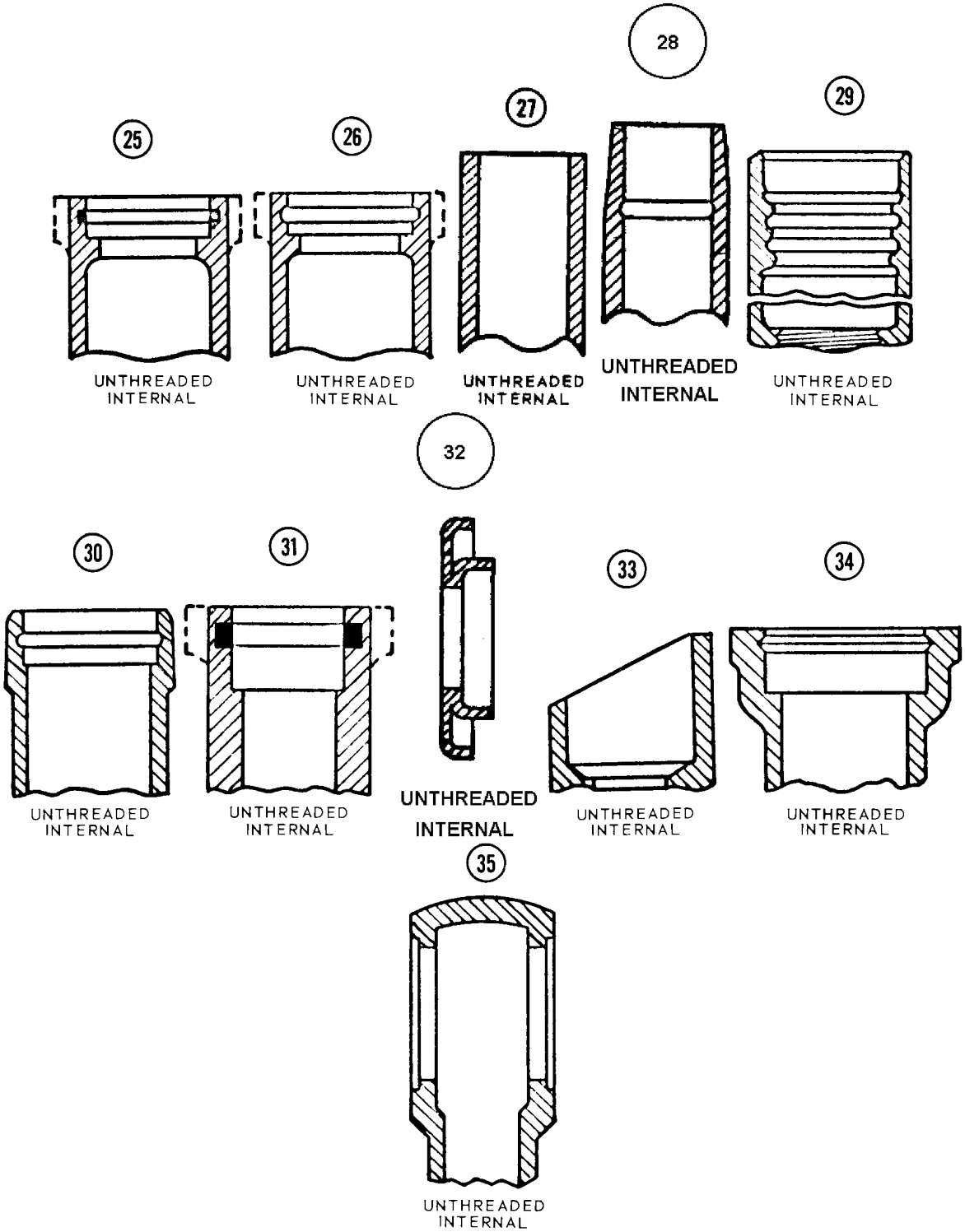

END CONNECTION STYLES

THREADED EXTERNAL

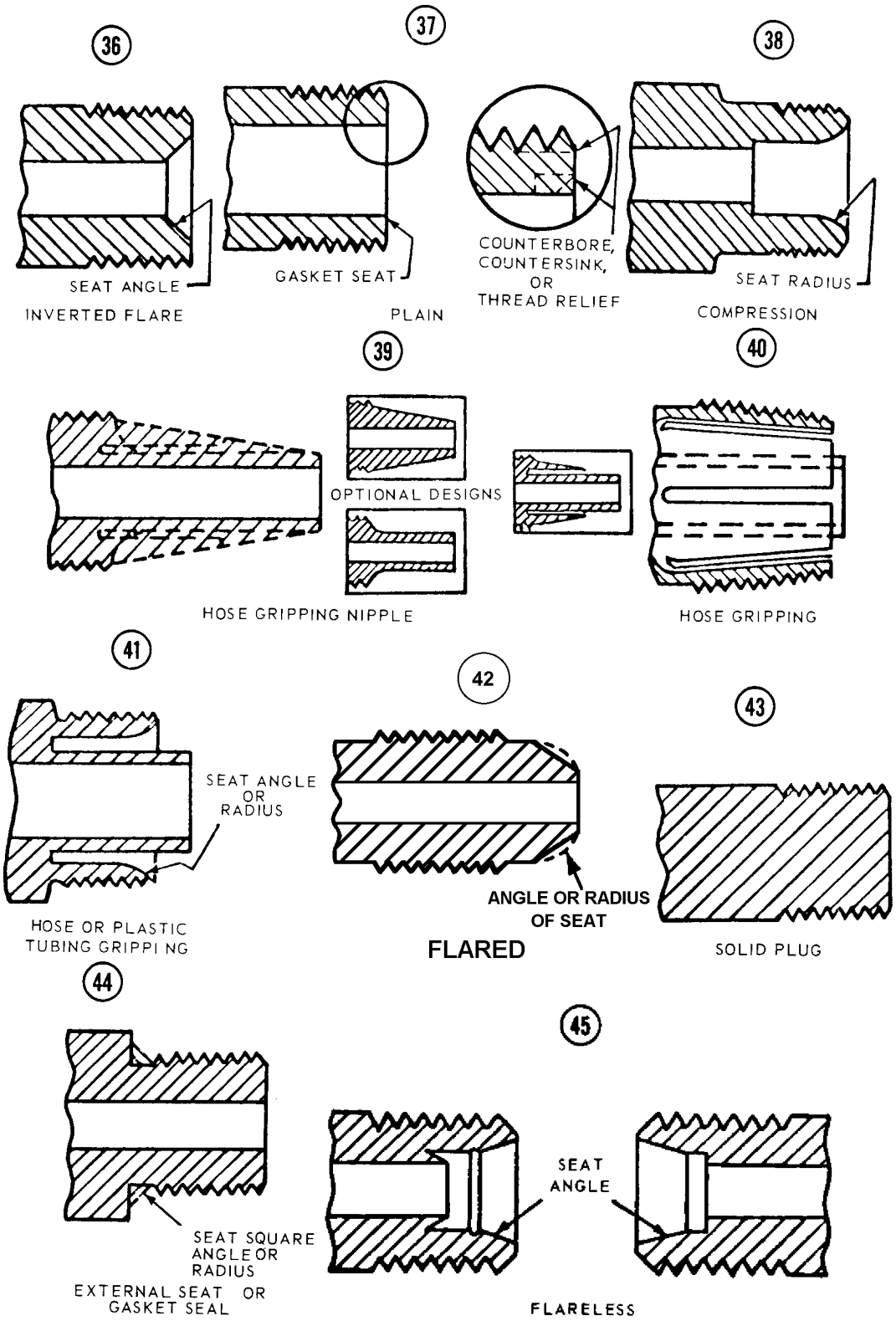
36
37
38
SEAT ANGLE
INVERTED FLARE
GASKET SEAT
PLAIN
COUNTERBORE,
COUNTERSINK,
OR
THREAD RELIEF
SEAT RADIUS
COMPRESSION
39
40
OPTIONAL DESIGNS
HOSE GRIPPING NIPPLE
HOSE GRIPPING
41
42
43
SEAT ANGLE
OR
RADIUS
HOSE OR PLASTIC
TUBING GRIPPI NG
ANGLE OR RADIUS
OF SEAT
FLARED
SOLID PLUG
44
45
SEAT SQUARE
ANGLE OR
RADIUS
EXTERNAL SEAT OR
GASKET SEAL
SEAT
ANGLE
FLARELESS

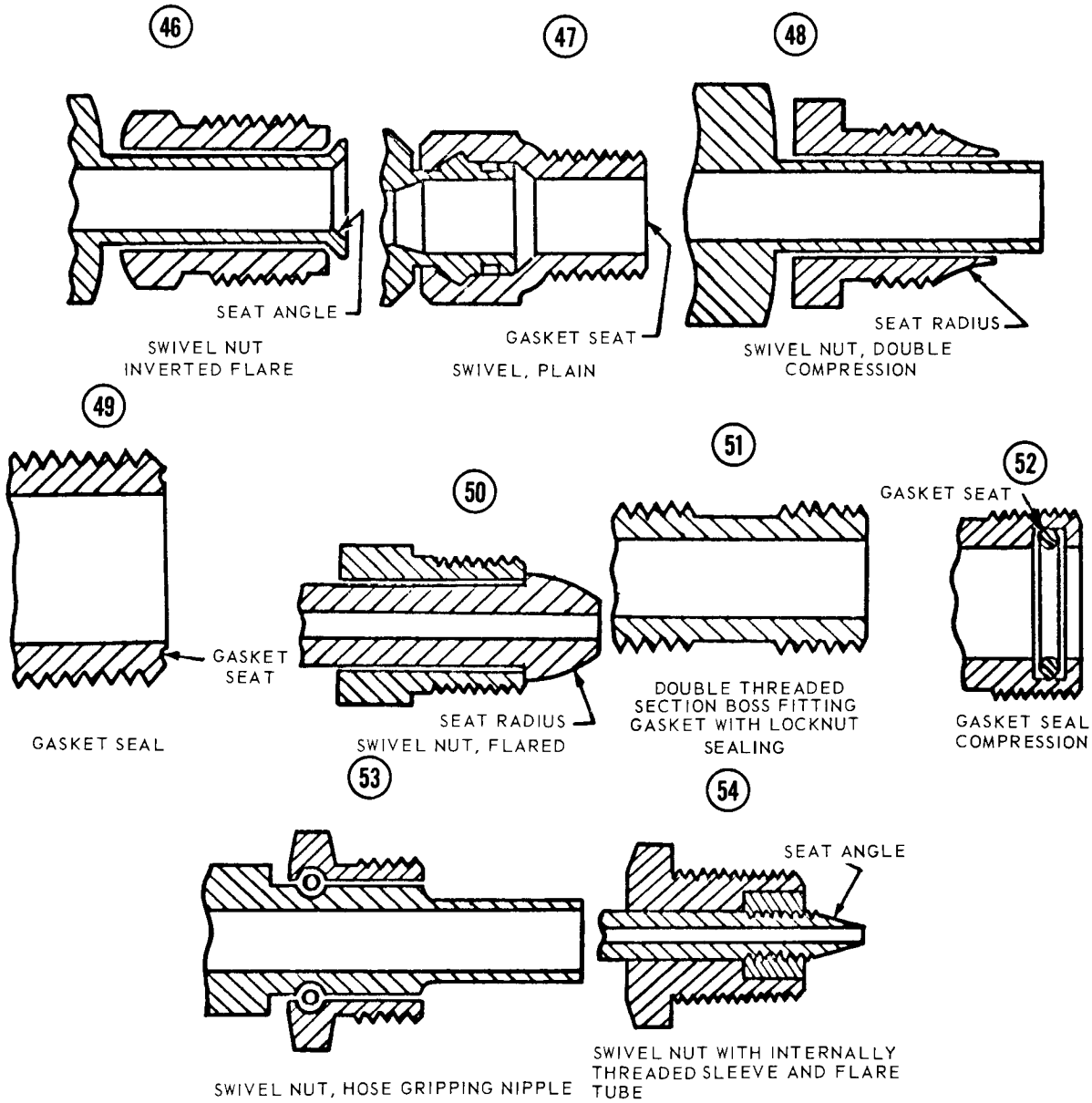

END CONNECTION STYLES

UNTHREADED EXTERNAL

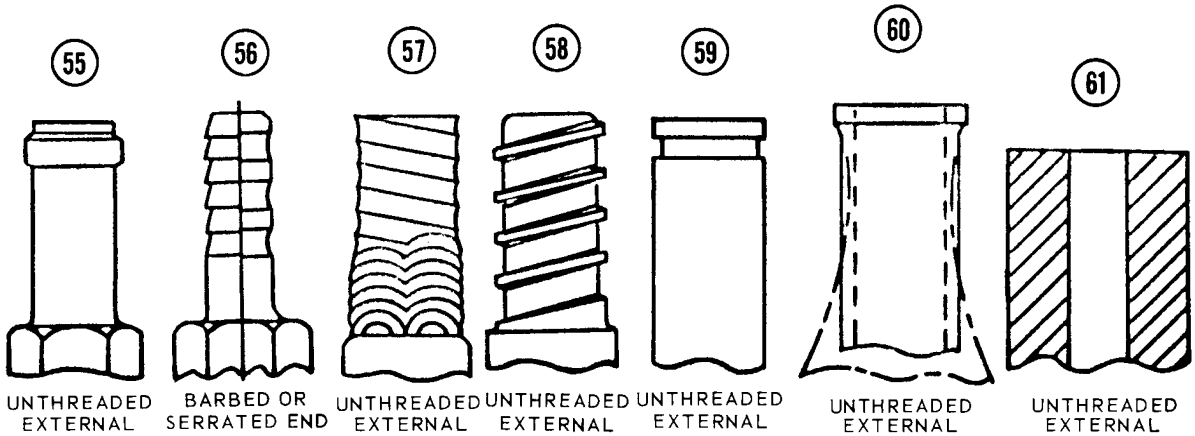

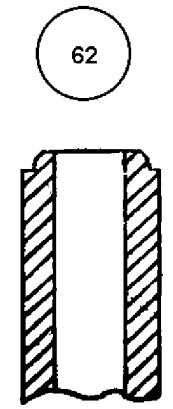

END CONNECTION STYLES

THREADED INTERNAL AND EXTERNAL

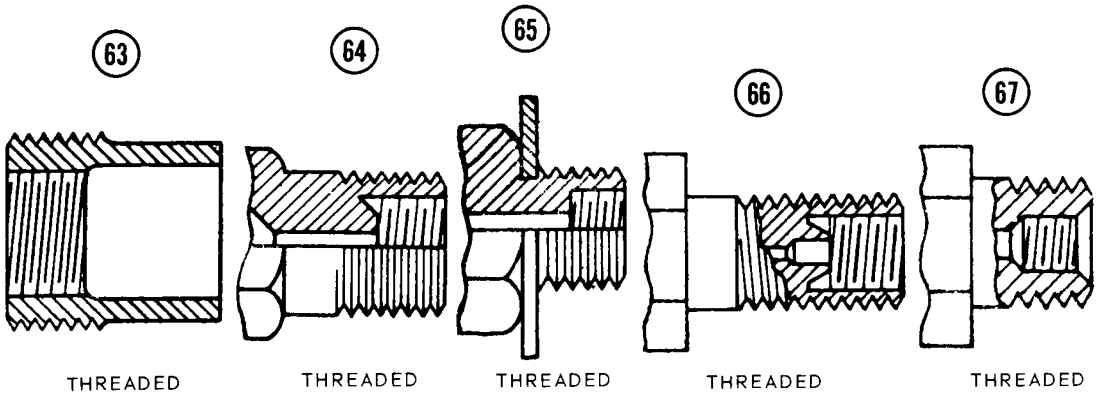

END CONNECTION STYLES

FLANGED

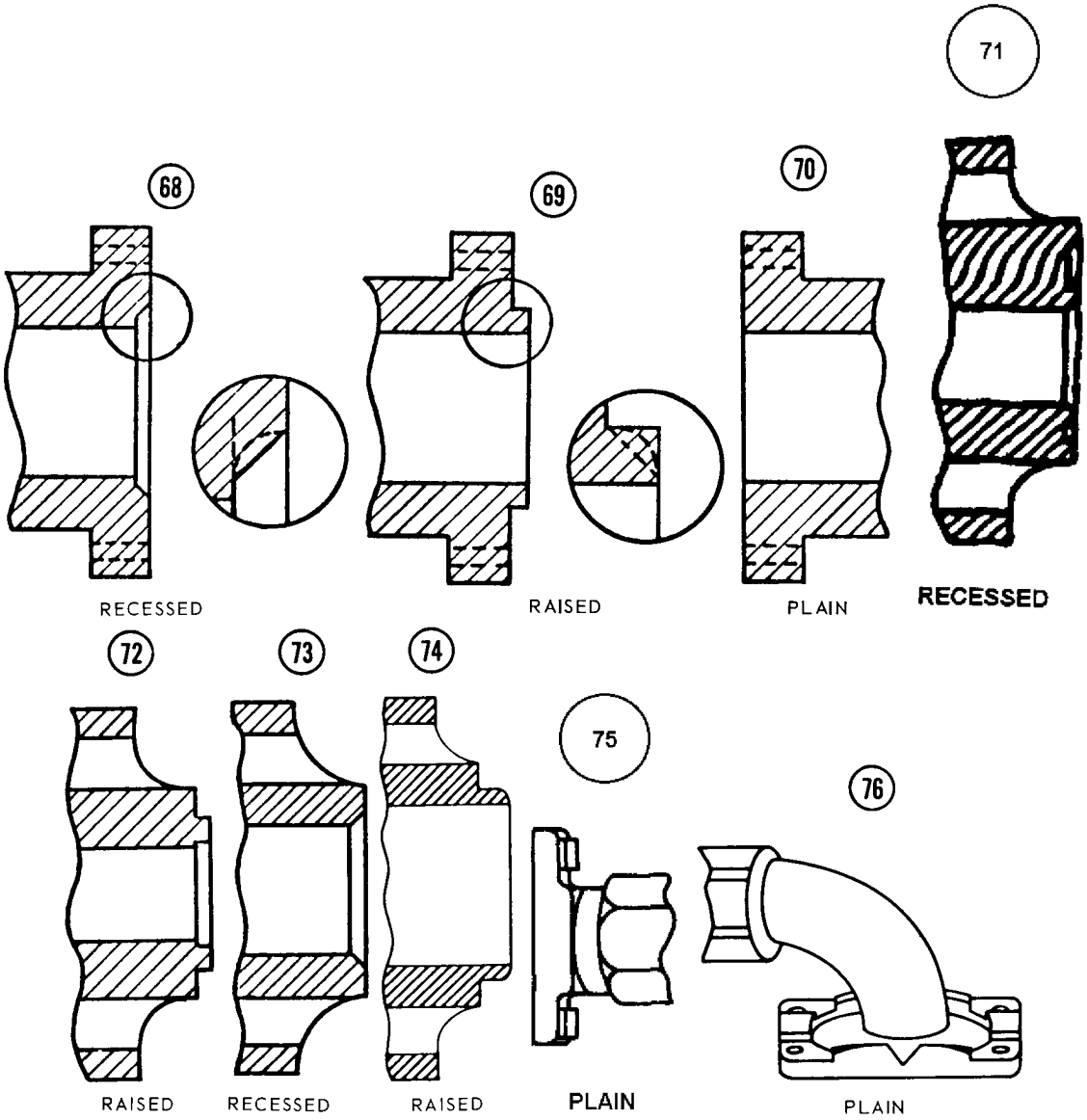
68
RECESSED
69
RAISED
70
PLAIN
71
RECESSED
72
RAISED
73
RECESSED
74
RAISED
75
PLAIN
76
PLAIN

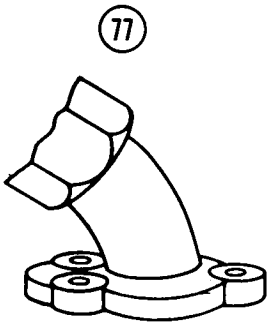

PLAIN

END CONNECTION STYLES

BUTT WELD

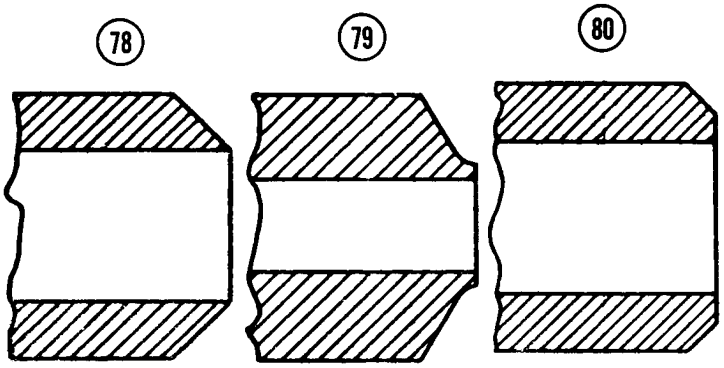

BUTT WELD BUTT WELD BUTT WELD

END CONNECTION STYLES

MISCELLANEOUS

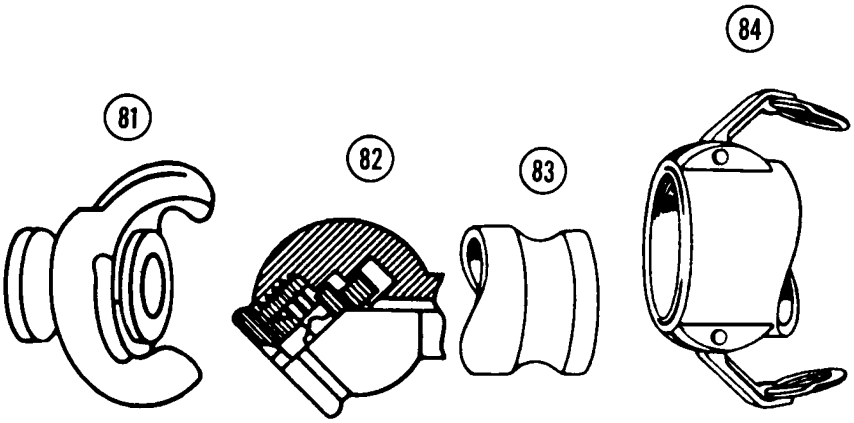

MISCELLANEOUS MISCELLANEOUS MISCELLANEOUS MISCELLANEOUS

Technical Data Tables

ALUMINUM AND ALUMINUM ALLOY PIPE WALL DIMENSIONS (EXTRACTED FROM ASTM B-241-49T) 129
NICKEL ALLOY PIPE WALL DIMENSIONS 129
BRASS, COPPER, AND BRONZE DIMENSIONS, WEIGHTS, AND TOLERANCES BRASS, COPPER, AND BRONZE DIMENSIONS, WEIGHTS, AND TOLERANCES BRASS, COPPER, AND BRONZE DIMENSIONS, WEIGHTS, AND TOLERANCES 130
WELDED AND SEAMLESS CORROSION RESISTING STEEL PIPE WALL DIMENSIONS 133
WELDED AND SEAMLESS STEEL PIPE WALL DIMENSIONS 134
WELDED WROUGHT-IRON PIPE WALL DIMENSIONS 160
INCH TO DECIMAL OF A FOOT CONVERSION CHART 161
STANDARD FRACTION TO DECIMAL CONVERSION CHART 163
IDENTIFIED SECONDARY ADDRESS CODING 164

ALUMINUM AND ALUMINUM ALLOY PIPE WALL DIMENSIONS
(EXTRACTED FROM ASTM B-241-49T)

NOMINAL PIPE SIZE	OUTSIDE DIAMETER	NOMINAL WALL THICKNESS	
STANDARD WALL	EXTRA HEAVY WALL		
1/8	0.405	0.068	0.095
1/4	0.540	0.088	0.119
3/8	0.675	0.091	0.126
1/2	0.840	0.109	0.147
3/4	1.050	0.113	0.154
1	1.315	0.133	0.179
1-1/4	1.660	0.140	0.191
1-1/2	1.900	0.145	0.200
2	2.375	0.154	0.218
2-1/2	2.875	0.203	0.276
3	3.500	0.216	0.300
3-1/2	4.000	0.226	0.318
4	4.500	0.237	0.337
5	5.563	0.258	0.375
6	6.625	0.280	0.432
8	8.625	0.277	0.500
8	8.625	0.322	-----
10	10.750	0.279	0.500
10	10.750	0.307	-----
10	10.750	0.365	-----
12	12.750	0.330	0.500

NOTE-ITEMS CONFORMING TO THE ABOVE DIMENSIONS SHALL BE APPLICABLE TO "PIPE"; ALL OTHER DIMENSIONS SHALL BE APPLICABLE TO "TUBE."

NICKEL ALLOY PIPE WALL DIMENSIONS

NOMINAL PIPE SIZE	OUTSIDE DIAMETER	NOMINAL WALL THICKNESS		
SCHEDULE 10	SCHEDULE 40	SCHEDULE 80		
1/8	0.405	0.049	0.068	0.095

1/4	0.540	0.065	0.088	0.119
3/8	0.675	0.065	0.091	0.126
1/2	0.840	0.083	0.109	0.147
3/4	1.050	0.083	0.113	0.154
1	1.315	0.109	0.133	0.179
1-1/4	1.660	0.109	0.140	0.191
1-1/2	1.900	0.109	0.145	0.200
2	2.375	0.100	0.154	0.218
2-1/2	2.875	0.120	0.203	0.276
3	3.500	0.120	0.216	0.300
3-1/2	4.000	0.120	0.226	0.318
4	4.500	0.120	0.237	0.337
5	5.563	0.134	0.258	0.375
6	6.625	0.134	0.280	0.432
8	8.625	-----	0.322	0.500

NOTE-ITEMS CONFORMING TO THE ABOVE DIMENSIONS SHALL BE APPLICABLE TO "PIPE"; ALL OTHER DIMENSIONS SHALL BE APPLICABLE TO "TUBE."

BRASS, COPPER, AND BRONZE DIMENSIONS, WEIGHTS, AND TOLERANCES

BRASS, COPPER, AND BRONZE DIMENSIONS, WEIGHTS, AND TOLERANCES
BRASS, COPPER, AND BRONZE DIMENSIONS, WEIGHTS, AND TOLERANCES

(EXTRACTED FROM COPPER & BRASS RESEARCH ASSOCIATION STANDARDS. TABLES CORRESPOND TO THE NATIONAL BUREAU OF STANDARDS SIMPLIFIED PRACTICE RECOMMENDATIONS R217-46)

	WEIGHT PER FOOT TOLERANCES	WALL THICKNESS TOLERANCE	
STANDARD PIPE SIZE IN INCHES	PLUS AND MINUS	MINUS	PLUS
UP TO 6 INCL	5\%	*5\%	LIMITED ONLY
OVER 6 TO 8 INCL	7\%	*7\%	BY WEIGHT
OVER 8	8\%	*8\%	TOLERANCES

LENGTH TOLERANCES: STANDARD LENGTH 12 FEET PLUS AND MINUS 1/2".

STANDARD PIPE SIZE IN INCHES	WEIGHT PER FOOT TOLERANCES PLUS AND MINUS	WALL THICKNESS TOLERANCE MINUS	PLUS

*EXPRESSED TO THE NEAREST 0.001".

NOTE-THESE TOLERANCE SCHEDULES ARE USED BY THE INDUSTRY AS APPLICABLE TO COMMERCIAL MATERIAL, IN THE ABSENCE OF OTHER SPECIFICATION BY THE PURCHASER.

(EXTRACTED FROM COPPER & BRASS RESEARCH ASSOCIATION STANDARDS. TABLES CORRESPOND TO THE NATIONAL BUREAU OF STANDARDS SIMPLIFIED PRACTICE RECOMMENDATIONS R217-46)

STANDARD PIPE SIZE IN INCHES	NOMINAL DIMENSIONS IN INCHES	POUNDS PER FOOT			
OUTSIDE DIAMETER	INSIDE DIAMETER	WALL THICKNESS	RED BRASS	COPPER	
1/8	0.405	0.281	0.062	0.253	0.259
1/4	0.540	0.376	0.082	0.447	0.457
3/8	0.675	0.495	0.092	0.627	0.641
1/2	0.840	0.626	0.107	0.934	0.955
3/4	1.050	0.822	0.114	1.27	1.30
1	1.315	1.063	0.126	1.78	1.82
1-1/4	1.660	1.368	0.146	2.63	2.69
1-1/2	1.900	1.600	0.150	3.13	3.20
2	2.375	2.063	0.156	4.12	4.22
2-1/2	2.875	2.501	0.187	5.99	6.12
3	3.500	3.062	0.219	8.56	8.75
3-1/2	4.000	3.500	0.250	11.2	11.4
4	4.500	4.000	0.250	12.7	12.9
5	5.562	5.062	0.250	15.8	16.2
6	6.625	6.125	0.250	19.0	19.4
8	8.625	8.001	0.312	30.9	31.6
10	10.750	10.020	0.365	45	46.2
12	12.750	12.000	0.375	55.3	56.5

STANDARD PIPE SIZE IN INCHES	NOMINAL DIMENSIONS IN INCHES	POUNDS PER FOOT		
OUTSIDE DIAMETER	INSIDE DIAMETER	WALL THICKNESS	RED BRASS	COPPER

NOTE-ITEMS CONFORMING TO THE ABOVE DIMENSIONS SHALL BE APPLICABLE TO "PIPE"; ALL OTHER DIMENSIONS SHALL BE APPLICABLE TO "TUBE."

(EXTRACTED FROM COPPER & BRASS RESEARCH ASSOCIATION STANDARDS. TABLES CORRESPOND TO THE NATIONAL BUREAU OF STANDARDS SIMPLIFIED PRACTICE RECOMMENDATIONS R217-46)

STANDARD PIPE SIZE IN INCHES	NOMINAL DIMENSIONS IN INCHES	POUNDS PER FOOT		
OUTSIDE DIAMETER	INSIDE DIAMETER	WALL THICKNESS	RED BRASS	COPPER
1/8	0.405	0.205	0.100	0.363	0.371
1/4	0.540	0.294	0.123	0.611	0.625
3/8	0.675	0.421	0.127	0.829	0.847
1/2	0.840	0.542	0.149	1.23	1.25
3/4	1.050	0.736	0.157	1.67	1.71
1	1.315	0.951	0.182	2.46	2.51
1-1/4	1.660	1.272	0.194	3.39	3.46
1-1/2	1.900	1.494	0.203	4.10	4.19
2	2.375	1.933	0.221	5.67	5.80
2-1/2	2.875	2.315	0.280	8.66	8.85
3	3.500	2.892	0.304	11.6	11.8
3-1/2	4.000	3.358	0.321	14.1	14.4
4	4.500	3.818	0.341	16.9	17.3
5	5.562	4.812	0.375	23.2	23.7
6	6.625	5.751	0.437	32.2	32.9
8	8.625	7.625	0.500	48.4	49.5
10	10.750	9.750	0.500	61.1	62.4

NOTE-ITEMS CONFORMING TO THE ABOVE DIMENSIONS SHALL BE APPLICABLE TO "PIPE"; ALL OTHER DIMENSIONS SHALL BE APPLICABLE TO "TUBE."

WELDED AND SEAMLESS CORROSION RESISTING STEEL PIPE WALL DIMENSIONS

NOMINAL PIPE SIZE	OUTSIDE DIAMETER	NOMINAL WALL THICKNESS			
SCHEDULE 5S**	SCHEDULE 10S**	SCHEDULE 40S	SCHEDULE 80S		
1/8	0.405	-	0.049	0.068	0.095
1/4	0.540	-	0.065	0.088	0.119
3/8	0.675	-	0.065	0.091	0.126
1/2	0.840	0.065	0.083	0.109	0.147
3/4	1.050	0.065	0.083	0.113	0.154
1	1.315	0.065	0.109	0.133	0.179
1-1/4	1.660	0.065	0.109	0.140	0.191
1-1/2	1.900	0.065	0.109	0.145	0.200
2	2.375	0.065	0.109	0.154	0.218
2-1/2	2.875	0.083	0.120	0.203	0.276
3	3.500	0.083	0.120	0.216	0.300
3-1/2	4.000	0.083	0.120	0.226	0.318
4	4.500	0.083	0.120	0.237	0.337
5	5.563	0.109	0.134	0.258	0.375
6	6.625	0.109	0.134	0.280	0.432
8	8.625	0.109	0.148	0.322	0.500
10	10.750	0.134	0.165	0.365	0.500*
12	12.750	0.156	0.180	0.375*	0.500*

*THESE DO NOT CONFORM TO ASA B36.10.

**SCHEDULE 5S AND 10S WALL THICKNESS DOES NOT PERMIT THREADING IN ACCORDANCE WITH ASA B2.1.

ALL DIMENSIONS ARE GIVEN IN INCHES. THE DECIMAL THICKNESS LISTED FOR THE RESPECTIVE PIPE SIZES REPRESENT THEIR NOMINAL OR AVERAGE WALL DIMENSIONS.

UNLESS OTHERWISE PROVIDED BY THE SPECIFICATION, THE ACTUAL WALL

THICKNESS AT ANY POINT SHALL NOT BE MORE THAN 12.5 PERCENT UNDER THE NOMINAL WALL THICKNESS SHOWN IN THE TABLES. PERMISSIBLE VARIATIONS IN OTHER DIMENSIONS ARE INDICATED IN ASTM SPECIFICATIONS FOR SEAMLESS ALLOY-STEEL PIPE FOR HIGH-TEMPERATURE SERVICE (A 158) AND SEAMLESS AND WELDED AUSTENITIC STAINLESS STEEL PIPE (A 312).

NOTE-ITEMS CONFORMING TO THE ABOVE DIMENSIONS SHALL BE APPLICABLE TO "PIPE"; ALL OTHER DIMENSIONS SHALL BE APPLICABLE TO "TUBE."

(EXTRACTED FROM AMERICAN STANDARD STAINLESS STEEL PIPE (ANS B36.19-1965), WITH THE PERMISSION OF THE PUBLISHER, THE AMERICAN SOCIETY OF MECHANICAL ENGINEERS, 29 W. 39TH ST., NEW YORK 18, N.Y.)

WELDED AND SEAMLESS STEEL PIPE WALL DIMENSIONS

Nom. Pipe Size (In.)	Out-side Dia. (In.)	API												
											ASA			
Std. Wall	5L		5LX	Schedule			Std. Wall	Schedule		Extra Strong Wall	Schedule			Double Extra Strong Wall
Extra Strong Wall	Double Extra Strong Wall	Std. Wall	10	20	30	40	60	80	100	120	140	160		

COLUMN 1 NOMINAL PIPE SIZE	COLUMN 2 SCHEDULE	COLUMN 3 IDENTICAL WALL THICKNESSES																
1/8	0.405	0.068	--	--	--	--	--	--	0.068	0.068	--	--	--	--	--	--	--	--
1/8	0.405	--	0.095	--	--	--	--	--	--	--	--	0.095	0.095	--	--	--	--	--
1/4	0.540	0.088	--	--	--	--	--	--	0.088	0.088	--	--	--	--	--	--	--	--
1/4	0.540	--	0.119	--	--	--	--	--	--	--	--	0.119	0.119	--	--	--	--	--
3/8	0.675	0.091	--	--	--	--	--	--	0.091	0.091	--	--	--	--	--	--	--	--
3/8	0.675	--	0.126	--	--	--	--	--	--	--	--	0.126	0.126	--	--	--	--	--
1/2	0.840	0.109	--	--	--	--	--	--	0.109	0.109	--	--	--	--	--	--	--	--
1/2	0.840	--	0.147	--	--	--	--	--	--	--	--	0.147	0.147	--	--	--	--	--
1/2	0.840	--	--	--	--	--	--	--	--	--	--	--	--	--	--	--	0.188	--
1/2	0.840	--	--	0.294	--	--	--	--	--	--	--	--	--	--	--	--	--	0.294
3/4	1.050	0.113	--	--	--	--	--	--	0.113	0.113	--	--	--	--	--	--	--	--
3/4	1.050	--	0.154	--	--	--	--	--	--	--	--	0.154	0.154	--	--	--	--	--
3/4	1.050	--	--	--	--	--	--	--	--	--	--	--	--	--	--	--	0.21	--

																	9	
3/4	1.050	--	--	0.308	--	--	--	--	--	--	--	--	--	--	--	--	--	0.308
1	1.315	0.133	--	--	--	--	--	--	0.133	0.133	--	--	--	--	--	--	--	--
1	1.315	--	0.179	--	--	--	--	--	--	--	--	0.179	0.179	--	--	--	--	--
1	1.315	--	--	--	--	--	--	--	--	--	--	--	--	--	--	--	0.250	--
1	1.315	--	--	0.358	--	--	--	--	--	--	--	--	--	--	--	--	--	0.358
1-1/4	1.660	0.140	--	--	--	--	--	--	0.140	0.140	--	--	--	--	--	--	--	--
1-1/4	1.660	--	0.191	--	--	--	--	--	--	--	--	0.191	0.191	--	--	--	--	--
1-1/4	1.660	--	--	--	--	--	--	--	--	--	--	--	--	--	--	--	0.250	--
1-1/4	1.660	--	--	0.382	--	--	--	--	--	--	--	--	--	--	--	--	--	0.382
1-1/2	1.900	0.145	--	--	--	--	--	--	0.145	0.145	--	--	--	--	--	--	--	--
1-1/2	1.900	--	0.200	--	--	--	--	--	--	--	--	0.200	0.200	--	--	--	--	--
1-1/2	1.900	--	--	--	--	--	--	--	--	--	--	--	--	--	--	--	0.281	--
1-1/2	1.900	--	--	0.400	--	--	--	--	--	--	--	--	--	--	--	--	--	0.400
2	2.375	0.154	--	--	--	--	--	--	0.154	0.154	--	--	--	--	--	--	--	--
2	2.375	--	0.218	--	--	--	--	--	--	--	--	0.218	0.218	--	--	--	--	--

2	2.375	--	--	--	--	--	--	--	--	--	--	--	--	--	--	--	0.344	--
2	2.375	--	--	0.436	--	--	--	--	--	--	--	--	--	--	--	--	--	0.436
2-1/2	2.875	0.203	--	--	--	--	--	--	0.203	0.203	--	--	--	--	--	--	--	--
2-1/2	2.875	--	0.276	--	--	--	--	--	--	--	--	0.276	0.276	--	--	--	--	--
2-1/2	2.875	--	--	--	--	--	--	--	--	--	--	--	--	--	--	--	0.375	--
2-1/2	2.875	--	--	0.552	--	--	--	--	--	--	--	--	--	--	--	--	--	0.552
3	3.500	0.125	--	--	--	--	--	--	--	--	--	--	--	--	--	--	--	--
3	3.500	0.156	--	--	--	--	--	--	--	--	--	--	--	--	--	--	--	--
3	3.500	0.188	--	--	--	--	--	--	--	--	--	--	--	--	--	--	--	--
3	3.500	0.216	--	--	--	--	--	--	0.216	0.216	--	--	--	--	--	--	--	--
3	3.500	0.250	--	--	--	--	--	--	--	--	--	--	--	--	--	--	--	--
3	3.500	0.281	--	--	--	--	--	--	--	--	--	--	--	--	--	--	--	--
3	3.500	--	0.300	--	--	--	--	--	--	--	--	0.300	0.300	--	--	--	--	--
3	3.500	--	--	--	--	--	--	--	--	--	--	--	--	--	--	--	0.438	--
3	3.500	--	--	0.600	--	--	--	--	--	--	--	--	--	--	--	--	--	0.600
3-1/2	4.000	0.125	--	--	--	--	--	--	--	--	--	--	--	--	--	--	--	--
3-1/2	4.000	0.138	--	--	--	--	--	--	--	--	--	--	--	--	--	--	--	--
3-1/2	4.000	0.188	--	--	--	--	--	--	--	--	--	--	--	--	--	--	--	--
3-1/2	4.000	0.226	--	--	--	--	--	--	0.226	0.226	--	--	--	--	--	--	--	--
3-1/2	4.000	0.250	--	--	--	--	--	--	--	--	--	--	--	--	--	--	--	--
3-1/2	4.000	0.281	--	--	--	--	--	--	--	--	--	--	--	--	--	--	--	--
3-1/2	4.000	--	0.318	--	--	--	--	--	--	--	--	0.318	0.318	--	--	--	--	--

3-1/2	4.000	--	--	--	--	--	--	--	--	--	--	--	--	--	--	--	--	0.636
4	4.500	0.125	--	--	0.125	--	--	--	--	--	--	--	--	--	--	--	--	--
4	4.500	0.141	--	--	0.141	--	--	--	--	--	--	--	--	--	--	--	--	--
4	4.500	0.156	--	--	0.156	--	--	--	--	--	--	--	--	--	--	--	--	--
4	4.500	0.172	--	--	0.172	--	--	--	--	--	--	--	--	--	--	--	--	--
4	4.500	0.188	--	--	0.188	--	--	--	--	--	--	--	--	--	--	--	--	--
4	4.500	0.203	--	--	0.203	--	--	--	--	--	--	--	--	--	--	--	--	--
4	4.500	0.219	--	--	0.219	--	--	--	--	--	--	--	--	--	--	--	--	--
4	4.500	0.237	--	--	0.237	--	--	--	0.237	0.237	--	--	--	--	--	--	--	--
4	4.500	0.250	--	--	0.250	--	--	--	--	--	--	--	--	--	--	--	--	--
4	4.500	0.281	--	--	0.281	--	--	--	--	--	--	--	--	--	--	--	--	--
4	4.500	0.312	--	--	0.312	--	--	--	--	--	--	--	--	--	--	--	--	--
4	4.500	--	0.337	--	0.337	--	--	--	--	--	--	0.337	0.337	--	--	--	--	--
4	4.500	0.438	--	--	0.438	--	--	--	--	--	--	--	--	--	0.438	--	--	--
4	4.500	0.531	--	--	0.531	--	--	--	--	--	--	--	--	--	--	--	0.531	--
4	4.500	--	--	0.	0.	--	--	--	--	--	--	--	--	--	--	--	--	0.

				674	674													674
5	5.563	0.156	--	--	--	--	--	--	--	--	--	--	--	--	--	--	--	--
5	5.563	0.188	--	--	--	--	--	--	--	--	--	--	--	--	--	--	--	--
5	5.563	0.219	--	--	--	--	--	--	--	--	--	--	--	--	--	--	--	--
5	5.563	0.258	--	--	--	--	--	--	0.258	0.258	--	--	--	--	--	--	--	--
5	5.563	0.281	--	--	--	--	--	--	--	--	--	--	--	--	--	--	--	--
5	5.563	0.312	--	--	--	--	--	--	--	--	--	--	--	--	--	--	--	--
5	5.563	0.344	--	--	--	--	--	--	--	--	--	--	--	--	--	--	--	--
5	5.563	0.375	--	--	--	--	--	--	--	--	--	0.375	0.375	--	--	--	--	--
5	5.563	--	--	--	--	--	--	--	--	--	--	--	--	--	0.500	--	--	--
5	5.563	--	--	--	--	--	--	--	--	--	--	--	--	--	--	--	0.625	--
5	5.563	--	--	0.750	--	--	--	--	--	--	--	--	--	--	--	--	--	0.750
6	6.625	0.125	--	--	0.125	--	--	--	--	--	--	--	--	--	--	--	--	--
6	6.625	0.141	--	--	0.141	--	--	--	--	--	--	--	--	--	--	--	--	--
6	6.625	0.156	--	--	0.156	--	--	--	--	--	--	--	--	--	--	--	--	--
6	6.625	0.172	--	--	0.172	--	--	--	--	--	--	--	--	--	--	--	--	--
6	6.625	0.188	--	--	0.188	--	--	--	--	--	--	--	--	--	--	--	--	--
6	6.625	0.203	--	--	0.203	--	--	--	--	--	--	--	--	--	--	--	--	--
6	6.625	0.219	--	--	0.219	--	--	--	--	--	--	--	--	--	--	--	--	--
6	6.625	0.250	--	--	0.25	--	--	--	--	--	--	--	--	--	--	--	--	--

6	6.625	0.280	--	--	0.280	--	--	--	0.280	0.280	--	--	--	--	--	--	--	--
6	6.625	0.312	--	--	0.312	--	--	--	--	--	--	--	--	--	--	--	--	--
6	6.625	0.344	--	--	0.344	--	--	--	--	--	--	--	--	--	--	--	--	--
6	6.625	0.375	--	--	0.375	--	--	--	--	--	--	--	--	--	--	--	--	--
6	6.625	--	0.432	--	0.432	--	--	--	--	--	--	0.432	0.432	--	--	--	--	--
6	6.625	0.500	--	--	0.500	--	--	--	--	--	--	--	--	--	--	--	--	--
6	6.625	0.562	--	--	0.562	--	--	--	--	--	--	--	--	--	0.562	--	--	--
6	6.625	0.625	--	--	0.625	--	--	--	--	--	--	--	--	--	--	--	--	--
6	6.625	0.719	--	--	0.719	--	--	--	--	--	--	--	--	--	--	--	0.719	--
6	6.625	--	--	0.864	--	--	--	--	--	--	--	--	--	--	--	--	--	0.864
8	8.625	0.188	--	--	0.188	--	--	--	--	--	--	--	--	--	--	--	--	--
8	8.625	--	--	--	0.203	--	--	--	--	--	--	--	--	--	--	--	--	--
8	8.625	0.219	--	--	0.219	--	--	--	--	--	--	--	--	--	--	--	--	--
8	8.625	0.250	--	--	0.250	--	0.250	--	--	--	--	--	--	--	--	--	--	--
8	8.625	0.277	--	--	0.277	--	--	0.277	--	--	--	--	--	--	--	--	--	--

8	8.625	0.312	--	--	0.312	--	--	--	--	--	--	--	--	--	--	--	--	--
8	8.625	0.322	--	--	0.322	--	--	--	0.322	0.322	--	--	--	--	--	--	--	--
8	8.625	0.344	--	--	0.344	--	--	--	--	--	--	--	--	--	--	--	--	--
8	8.625	0.375	--	--	0.375	--	--	--	--	--	--	--	--	--	--	--	--	--
8	8.625	--	--	--	--	--	--	--	--	--	0.406	--	--	--	--	--	--	--
8	8.625	0.438	--	--	0.438	--	--	--	--	--	--	--	--	--	--	--	--	--
8	8.625	--	0.500	--	0.500	--	--	--	--	--	--	0.500	0.500	--	--	--	--	--
8	8.625	0.562	--	--	0.562	--	--	--	--	--	--	--	--	--	--	--	--	--
8	8.625	--	--	--	--	--	--	--	--	--	--	--	--	0.594	--	--	--	--
8	8.625	0.625	--	--	0.625	--	--	--	--	--	--	--	--	--	--	--	--	--
8	8.625	0.719	--	--	--	--	--	--	--	--	--	--	--	--	0.719	--	--	--
8	8.625	--	--	--	--	--	--	--	--	--	--	--	--	--	--	0.812	--	--
8	8.625	--	--	0.875	--	--	--	--	--	--	--	--	--	--	--	--	--	0.875
8	8.625	--	--	--	--	--	--	--	--	--	--	--	--	--	--	--	0.906	--
10	10.750	0.188	--	--	0.188	--	--	--	--	--	--	--	--	--	--	--	--	--
10	10.750	--	--	--	0.20	--	--	--	--	--	--	--	--	--	--	--	--	--

					3													
10	10.750	0.219	--	--	0.219	--	--	--	--	--	--	--	--	--	--	--	--	--
10	10.750	0.250	--	--	0.250	--	0.250	--	--	--	--	--	--	--	--	--	--	--
10	10.750	0.279	--	--	0.279	--	--	--	--	--	--	--	--	--	--	--	--	--
10	10.750	0.307	--	--	0.307	--	--	--	--	--	--	--	--	--	--	--	--	--
10	10.750	0.344	--	--	0.344	--	--	--	--	--	--	--	--	--	--	--	--	--
10	10.750	0.365	--	--	0.365	--	--	--	0.365	0.365	--	--	--	--	--	--	--	--
10	10.750	0.438	--	--	0.438	--	--	--	--	--	--	--	--	--	--	--	--	--
10	10.750	--	0.500	--	0.500	--	--	--	--	--	0.500	0.500	--	--	--	--	--	--
10	10.750	0.562	--	--	0.562	--	--	--	--	--	--	--	--	--	--	--	--	--
10	10.750	--	--	--	--	--	--	--	--	--	--	--	0.594	--	--	--	--	--
10	10.750	0.625	--	--	0.625	--	--	--	--	--	--	--	--	--	--	--	--	--
10	10.750	0.719	--	--	0.719	--	--	--	--	--	--	--	--	0.719	--	--	--	--
10	10.750	0.812	--	--	--	--	--	--	--	--	--	--	--	--	--	--	--	--
10	10.750	--	--	--	--	--	--	--	--	--	--	--	--	--	0.844	--	--	--
10	10.750	--	--	--	--	--	--	--	--	--	--	--	--	--	--	1.000	--	1.000
10	10.75	--	--	--	--	--	--	--	--	--	--	--	--	--	--	--	1.	--

	0																125	
12	12.750	0.188	--	--	0.188	--	--	--	--	--	--	--	--	--	--	--	--	--
12	12.750	--	--	--	0.203	--	--	--	--	--	--	--	--	--	--	--	--	--
12	12.750	0.219	--	--	0.219	--	--	--	--	--	--	--	--	--	--	--	--	--
12	12.750	0.250	--	--	0.250	--	0.250	--	--	--	--	--	--	--	--	--	--	--
12	12.750	0.281	--	--	0.281	--	--	--	--	--	--	--	--	--	--	--	--	--
12	12.750	0.312	--	--	0.312	--	--	--	--	--	--	--	--	--	--	--	--	--
12	12.750	0.330	--	--	0.330	--	--	0.330	--	--	--	--	--	--	--	--	--	--
12	12.750	0.344	--	--	0.344	--	--	--	--	--	--	--	--	--	--	--	--	--
12	12.750	0.375	--	--	0.375	--	--	--	0.375	--	--	--	--	--	--	--	--	--
12	12.750	--	--	--	0.406	--	--	--	--	0.406	--	--	--	--	--	--	--	--
12	12.750	0.438	--	--	0.438	--	--	--	--	--	--	--	--	--	--	--	--	--
12	12.750	--	0.500	--	0.500	--	--	--	--	--	--	0.500	--	--	--	--	--	--
12	12.750	0.562	--	--	0.562	--	--	--	--	--	0.562	--	--	--	--	--	--	--
12	12.750	0.625	--	--	0.625	--	--	--	--	--	--	--	--	--	--	--	--	--
12	12.750	--	--	--	0.68	--	--	--	--	--	--	--	0.68	--	--	--	--	--

					8								8					
12	12.750	0.719	--	--	--	--	--	--	--	--	--	--	--	--	--	--	--	--
12	12.750	--	--	--	0.750	--	--	--	--	--	--	--	--	--	--	--	--	--
12	12.750	--	--	--	--	--	--	--	--	--	--	--	--	0.844	--	--	--	--
12	12.750	--	--	--	--	--	--	--	--	--	--	--	--	--	1.000	--	--	1.000
12	12.750	--	--	--	--	--	--	--	--	--	--	--	--	--	--	1.125	--	--
12	12.750	--	--	--	--	--	--	--	--	--	--	--	--	--	--	--	1.312	--
14	14.000	--	--	--	0.210	--	--	--	--	--	--	--	--	--	--	--	--	--
14	14.000	--	--	--	0.219	--	--	--	--	--	--	--	--	--	--	--	--	--
14	14.000	0.250	--	--	0.250	0.250	--	--	--	--	--	--	--	--	--	--	--	--
14	14.000	0.281	--	--	0.281	--	--	--	--	--	--	--	--	--	--	--	--	--
14	14.000	0.312	--	--	0.312	--	0.312	--	--	--	--	--	--	--	--	--	--	--
14	14.000	0.344	--	--	0.344	--	--	--	--	--	--	--	--	--	--	--	--	--
14	14.000	0.375	--	--	0.375	--	--	0.375	0.375	--	--	--	--	--	--	--	--	--
14	14.000	--	--	--	0.406	--	--	--	--	--	--	--	--	--	--	--	--	--
14	14.000	0.438	--	--	0.438	--	--	--	--	0.438	--	--	--	--	--	--	--	--
14	14.000	--	--	--	0.46	--	--	--	--	--	--	--	--	--	--	--	--	--

					9													
14	14.000	0.500	--	--	0.500	--	--	--	--	--	--	0.500	--	--	--	--	--	--
14	14.000	0.562	--	--	0.562	--	--	--	--	--	--	--	--	--	--	--	--	--
14	14.000	--	--	--	--	--	--	--	--	--	0.594	--	--	--	--	--	--	--
14	14.000	0.625	--	--	0.625	--	--	--	--	--	--	--	--	--	--	--	--	--
14	14.000	0.688	--	--	0.688	--	--	--	--	--	--	--	--	--	--	--	--	--
14	14.000	0.750	--	--	0.750	--	--	--	--	--	--	--	0.750	--	--	--	--	--
14	14.000	0.812	--	--	--	--	--	--	--	--	--	--	--	--	--	--	--	--
14	14.000	--	--	--	--	--	--	--	--	--	--	--	--	0.938	--	--	--	--
14	14.000	--	--	--	--	--	--	--	--	--	--	--	--	--	1.094	--	--	--
14	14.000	--	--	--	--	--	--	--	--	--	--	--	--	--	--	1.250	--	--
14	14.000	--	--	--	--	--	--	--	--	--	--	--	--	--	--	--	1.406	--
16	16.000	--	--	--	0.203	--	--	--	--	--	--	--	--	--	--	--	--	--
16	16.000	--	--	--	0.219	--	--	--	--	--	--	--	--	--	--	--	--	--
16	16.000	0.250	--	--	0.250	0.250	--	--	--	--	--	--	--	--	--	--	--	--
16	16.000	0.281	--	--	0.281	--	--	--	--	--	--	--	--	--	--	--	--	--
16	16.000	0.312	--	--	0.31	--	0.31	--	--	--	--	--	--	--	--	--	--	--

					2		2											
16	16.000	0.344	--	--	0.344	--	--	--	--	--	--	--	--	--	--	--	--	--
16	16.000	0.375	--	--	0.375	--	--	0.375	0.375	--	--	--	--	--	--	--	--	--
16	16.000	--	--	--	0.406	--	--	--	--	--	--	--	--	--	--	--	--	--
16	16.000	0.438	--	--	0.438	--	--	--	--	--	--	--	--	--	--	--	--	--
16	16.000	--	--	--	0.469	--	--	--	--	--	--	--	--	--	--	--	--	--
16	16.000	0.500	--	--	0.500	--	--	--	--	0.500	--	0.500	--	--	--	--	--	--
16	16.000	0.562	--	--	0.562	--	--	--	--	--	--	--	--	--	--	--	--	--
16	16.000	0.625	--	--	0.625	--	--	--	--	--	--	--	--	--	--	--	--	--
16	16.000	--	--	--	--	--	--	--	--	--	0.656	--	--	--	--	--	--	--
16	16.000	0.688	--	--	0.688	--	--	--	--	--	--	--	--	--	--	--	--	--
16	16.000	0.750	--	--	0.750	--	--	--	--	--	--	--	--	--	--	--	--	--
16	16.000	0.812	--	--	--	--	--	--	--	--	--	--	--	--	--	--	--	--
16	16.000	--	--	--	--	--	--	--	--	--	--	--	0.844	--	--	--	--	--
16	16.000	--	--	--	--	--	--	--	--	--	--	--	--	1.031	--	--	--	--
16	16.000	--	--	--	--	--	--	--	--	--	--	--	--	--	1.219	--	--	--
16	16.00	--	--	--	--	--	--	--	--	--	--	--	--	--	--	1.4	--	--

	0															38		
16	16.000	--	--	--	--	--	--	--	--	--	--	--	--	--	--	--	1.594	--
18	18.000	--	--	--	0.219	--	--	--	--	--	--	--	--	--	--	--	--	--
18	18.000	0.250	--	--	0.250	--	--	--	--	--	--	--	--	--	--	--	--	--
18	18.000	0.281	--	--	0.281	--	--	--	--	--	--	--	--	--	--	--	--	--
18	18.000	0.312	--	--	0.312	--	0.312	--	--	--	--	--	--	--	--	--	--	--
18	18.000	0.344	--	--	0.344	--	--	--	--	--	--	--	--	--	--	--	--	--
18	18.000	0.375	--	--	0.375	--	--	--	0.375	--	--	--	--	--	--	--	--	--
18	18.000	--	--	--	0.406	--	--	--	--	--	--	--	--	--	--	--	--	--
18	18.000	0.438	--	--	0.438	--	--	0.438	--	--	--	--	--	--	--	--	--	--
18	18.000	--	--	--	0.469	--	--	--	--	--	--	--	--	--	--	--	--	--
18	18.000	0.500	--	--	0.500	--	--	--	--	--	--	0.500	--	--	--	--	--	--
18	18.000	0.562	--	--	0.562	--	--	--	--	0.562	--	--	--	--	--	--	--	--
18	18.000	0.625	--	--	0.625	--	--	--	--	--	--	--	--	--	--	--	--	--
18	18.000	0.688	--	--	0.688	--	--	--	--	--	--	--	--	--	--	--	--	--
18	18.000	0.750	--	--	0.750	--	--	--	--	--	0.750	--	--	--	--	--	--	--

18	18.000	0.812	--	--	0.812	--	--	--	--	--	--	--	--	--	--	--	--	--
18	18.000	--	--	--	--	--	--	--	--	--	--	--	0.938	--	--	--	--	--
18	18.000	--	--	--	--	--	--	--	--	--	--	--	--	1.156	--	--	--	--
18	18.000	--	--	--	--	--	--	--	--	--	--	--	--	--	1.375	--	--	--
18	18.000	--	--	--	--	--	--	--	--	--	--	--	--	--	--	1.562	--	--
18	18.000	--	--	--	--	--	--	--	--	--	--	--	--	--	--	--	1.781	--
20	20.000	--	--	--	0.219	--	--	--	--	--	--	--	--	--	--	--	--	--
20	20.000	0.281	--	--	0.281	--	--	--	--	--	--	--	--	--	--	--	--	--
20	20.000	0.312	--	--	0.312	--	--	--	--	--	--	--	--	--	--	--	--	--
20	20.000	0.344	--	--	0.344	--	--	--	--	--	--	--	--	--	--	--	--	--
20	20.000	0.375	--	--	0.375	--	0.375	--	0.375	--	--	--	--	--	--	--	--	--
20	20.000	--	--	--	0.406	--	--	--	--	--	--	--	--	--	--	--	--	--
20	20.000	0.438	--	--	0.438	--	--	--	--	--	--	--	--	--	--	--	--	--
20	20.000	--	--	--	0.469	--	--	--	--	--	--	--	--	--	--	--	--	--
20	20.000	0.500	--	--	0.500	--	--	0.500	--	--	--	--	--	--	--	--	--	--
20	20.000	0.562	--	--	0.56	--	--	--	--	--	--	--	--	--	--	--	--	--

					2													
20	20.000	--	--	--	--	--	--	--	--	0.594	--	--	--	--	--	--	--	--
20	20.000	0.625	--	--	0.625	--	--	--	--	--	--	--	--	--	--	--	--	--
20	20.000	0.688	--	--	0.688	--	--	--	--	--	--	--	--	--	--	--	--	--
20	20.000	0.750	--	--	0.750	--	--	--	--	--	--	--	--	--	--	--	--	--
20	20.000	0.812	--	--	0.812	--	--	--	--	--	0.812	--	--	--	--	--	--	--
20	20.000	--	--	--	--	--	--	--	--	--	--	--	1.031	--	--	--	--	--
20	20.000	--	--	--	--	--	--	--	--	--	--	--	--	1.281	--	--	--	--
20	20.000	--	--	--	--	--	--	--	--	--	--	--	--	--	1.500	--	--	--
20	20.000	--	--	--	--	--	--	--	--	--	--	--	--	--	--	1.750	--	--
20	20.000	--	--	--	--	--	--	--	--	--	--	--	--	--	--	--	1.969	--
20	20.000	--	--	--	--	--	--	--	--	--	--	--	--	--	--	--	--	--
22	22.000	--	--	--	0.219	--	--	--	--	--	--	--	--	--	--	--	--	--
22	22.000	0.250	--	--	0.250	0.250	--	--	--	--	--	--	--	--	--	--	--	--
22	22.000	0.281	--	--	0.281	--	--	--	--	--	--	--	--	--	--	--	--	--
22	22.000	0.312	--	--	0.312	--	--	--	--	--	--	--	--	--	--	--	--	--
22	22.000	0.344	--	--	0.344	--	--	--	--	--	--	--	--	--	--	--	--	--

22	22.000	0.375	--	--	0.375	--	0.375	0.375	--	--	--	--	--	--	--	--	--	--
22	22.000	--	--	--	0.406	--	--	--	--	--	--	--	--	--	--	--	--	--
22	22.000	0.438	--	--	0.438	--	--	--	--	--	--	--	--	--	--	--	--	--
22	22.000	--	--	--	0.469	--	--	--	--	--	--	--	--	--	--	--	--	--
22	22.000	0.500	--	--	0.500	--	--	--	0.500	--	--	--	--	--	--	--	--	--
22	22.000	0.562	--	--	0.562	--	--	--	--	--	--	--	--	--	--	--	--	--
22	22.000	0.625	--	--	0.625	--	--	--	--	--	--	--	--	--	--	--	--	--
22	22.000	0.688	--	--	0.688	--	--	--	--	--	--	--	--	--	--	--	--	--
22	22.000	0.750	--	--	0.750	--	--	--	--	--	--	--	--	--	--	--	--	--
22	22.000	0.812	--	--	0.812	--	--	--	--	--	--	--	--	--	--	--	--	--
22	22.000	--	--	--	--	--	--	--	--	--	0.875	--	--	--	--	--	--	--
22	22.000	--	--	--	--	--	--	--	--	--	--	--	1.125	--	--	--	--	--
22	22.000	--	--	--	--	--	--	--	--	--	--	--	--	1.375	--	--	--	--
22	22.000	--	--	--	--	--	--	--	--	--	--	--	--	--	1.625	--	--	--
22	22.000	--	--	--	--	--	--	--	--	--	--	--	--	--	--	1.875	--	--
22	22.000	--	--	--	--	--	--	--	--	--	--	--	--	--	--	--	2.12	--

																	5	
24	24.000	0.250	--	--	0.250	0.250	--	--	--	--	--	--	--	--	--	--	--	--
24	24.000	0.281	--	--	0.281	--	--	--	--	--	--	--	--	--	--	--	--	--
24	24.000	0.312	--	--	0.312	--	--	--	--	--	--	--	--	--	--	--	--	--
24	24.000	0.344	--	--	0.344	--	--	--	--	--	--	--	--	--	--	--	--	--
24	24.000	0.375	--	--	0.375	--	0.375	--	--	--	--	--	--	--	--	--	--	--
24	24.000	--	--	--	0.406	--	--	--	--	--	--	--	--	--	--	--	--	--
24	24.000	0.438	--	--	0.438	--	--	--	--	--	--	--	--	--	--	--	--	--
24	24.000	--	--	--	0.469	--	--	--	--	--	--	--	--	--	--	--	--	--
24	24.000	0.500	--	--	0.500	--	--	--	--	--	--	0.500	--	--	--	--	--	--
24	24.000	0.562	--	--	0.562	--	--	0.562	--	--	--	--	--	--	--	--	--	--
24	24.000	0.625	--	--	--	--	--	--	--	--	--	--	--	--	--	--	--	--
24	24.000	0.688	--	--	0.688	--	--	--	--	0.688	--	--	--	--	--	--	--	--
24	24.000	0.750	--	--	0.750	--	--	--	--	--	--	--	--	--	--	--	--	--
24	24.000	0.812	--	--	0.812	--	--	--	--	--	--	--	--	--	--	--	--	--
24	24.000	--	--	--	--	--	--	--	--	--	0.969	--	--	--	--	--	--	--
24	24.00	--	--	--	--	--	--	--	--	--	--	--	1.	--	--	--	--	--

	0												219					
24	24.000	--	--	--	--	--	--	--	--	--	--	--	--	1.531	--	--	--	--
24	24.000	--	--	--	--	--	--	--	--	--	--	--	--	--	1.812	--	--	--
24	24.000	--	--	--	--	--	--	--	--	--	--	--	--	--	--	2.062	--	--
24	24.000	--	--	- -	--	--	--	--	--	--	--	--	--	--	--	--	2.344	--
26	26.000	0.250	--	--	0.250	--	--	--	--	--	--	--	--	--	--	--	--	--
26	26.000	0.281	--	--	0.281	--	--	--	--	--	--	--	--	--	--	--	--	--
26	26.000	0.312	--	--	0.312	0.312	--	--	--	--	--	--	--	--	--	--	--	--
26	26.000	0.344	--	--	0.344	--	--	--	--	--	--	--	--	--	--	--	--	--
26	26.000	0.375	--	--	0.375	--	--	--	0.375	--	--	--	--	--	--	--	--	--
26	26.000	--	--	--	0.406	--	--	--	--	--	--	--	--	--	--	--	--	--
26	26.000	0.438	--	--	0.438	--	--	--	--	--	--	--	--	--	--	--	--	--
26	26.000	--	--	--	0.469	--	--	--	--	--	--	--	--	--	--	--	--	--
26	26.000	0.500	--	--	0.500	--	--	--	--	0.500	--	--	--	--	--	--	--	--
26	26.000	0.562	--	--	0.562	--	--	--	--	--	--	--	--	--	--	--	--	--
26	26.000	0.625	--	--	0.625	--	--	--	--	--	--	--	--	--	--	--	--	--

26	26.000	0.688	--	--	0.688	--	--	--	--	--	--	--	--	--	--	--	--	--
26	26.000	0.750	--	--	0.750	--	--	--	--	--	--	--	--	--	--	--	--	--
28	28.000	--	--	--	0.250	--	--	--	--	--	--	--	--	--	--	--	--	--
28	28.000	--	--	--	0.281	--	--	--	--	--	--	--	--	--	--	--	--	--
28	28.000	--	--	--	0.312	0.312	--	--	--	--	--	--	--	--	--	--	--	--
28	28.000	--	--	--	0.344	--	--	--	--	--	--	--	--	--	--	--	--	--
28	28.000	0.375	--	--	0.375	--	--	--	0.375	--	--	--	--	--	--	--	--	--
28	28.000	--	--	--	0.406	--	--	--	--	--	--	--	--	--	--	--	--	--
28	28.000	0.438	--	--	0.438	--	--	--	--	--	--	--	--	--	--	--	--	--
28	28.000	--	--	--	0.469	--	--	--	--	--	--	--	--	--	--	--	--	--
28	28.000	0.500	--	--	0.500	--	--	--	--	0.500	--	--	--	--	--	--	--	--
28	28.000	0.625	--	--	0.625	--	--	0.625	--	--	--	--	--	--	--	--	--	--
30	30.000	--	--	--	0.250	--	--	--	--	--	--	--	--	--	--	--	--	--
30	30.000	--	--	--	0.281	--	--	--	--	--	--	--	--	--	--	--	--	--
30	30.000	--	--	--	0.312	0.312	--	--	--	--	--	--	--	--	--	--	--	--
30	30.00	--	--	--	0.	--	--	--	--	--	--	--	--	--	--	--	--	--

	0				344													
30	30.000	0.375	--	--	0.375	--	--	--	0.375	--	--	--	--	--	--	--	--	--
30	30.000	--	--	--	0.406	--	--	--	--	--	--	--	--	--	--	--	--	--
30	30.000	0.438	--	--	0.438	--	--	--	--	--	--	--	--	--	--	--	--	--
30	30.000	--	--	--	0.469	--	--	--	--	--	--	--	--	--	--	--	--	--
30	30.000	0.500	--	--	0.500	--	0.500	--	--	--	--	0.500	--	--	--	--	--	--
30	30.000	0.562	--	--	0.562	--	--	--	--	--	--	--	--	--	--	--	--	--
30	30.000	0.625	--	--	0.625	--	--	0.625	--	--	--	--	--	--	--	--	--	--
32	32.000	--	--	--	0.250	--	--	--	--	--	--	--	--	--	--	--	--	--
32	32.000	--	--	--	0.281	--	--	--	--	--	--	--	--	--	--	--	--	--
32	32.000	--	--	--	0.312	0.312	--	--	--	--	--	--	--	--	--	--	--	--
32	32.000	--	--	--	0.344	--	--	--	--	--	--	--	--	--	--	--	--	--
32	32.000	0.375	--	--	0.375	--	--	--	0.375	--	--	--	--	--	--	--	--	--
32	32.000	--	--	--	0.406	--	--	--	--	--	--	--	--	--	--	--	--	--
32	32.000	0.438	--	--	0.438	--	--	--	--	--	--	--	--	--	--	--	--	--
32	32.000	--	--	--	0.46	--	--	--	--	--	--	--	--	--	--	--	--	--

					9													
32	32.000	0.500	--	--	0.500	--	0.500	--	--	--	--	0.500	--	--	--	--	--	--
32	32.000	0.562	--	--	0.562	--	--	--	--	--	--	--	--	--	--	--	--	--
32	32.000	0.625	--	--	0.625	--	--	0.625	--	--	--	--	--	--	--	--	--	--
32	32.000	--	--	--	--	--	--	--	--	0.688	--	--	--	--	--	--	--	--
34	34.000	--	--	--	0.250	--	--	--	--	--	--	--	--	--	--	--	--	--
34	34.000	--	--	--	0.281	--	--	--	--	--	--	--	--	--	--	--	--	--
34	34.000	--	--	--	0.312	0.312	--	--	--	--	--	--	--	--	--	--	--	--
34	34.000	--	--	--	0.344	--	--	--	--	--	--	--	--	--	--	--	--	--
34	34.000	0.375	--	--	0.375	--	--	--	0.375	--	--	--	--	--	--	--	--	--
34	34.000	--	--	--	0.406	--	--	--	--	--	--	--	--	--	--	--	--	--
34	34.000	0.438	--	--	0.438	--	--	--	--	--	--	--	--	--	--	--	--	--
34	34.000	--	--	--	0.469	--	--	--	--	--	--	--	--	--	--	--	--	--
34	34.000	0.500	--	--	0.500	--	0.500	--	--	--	--	0.500	--	--	--	--	--	--
34	34.000	0.562	--	--	0.562	--	--	--	--	--	--	--	--	--	--	--	--	--
34	34.000	0.625	--	--	0.625	--	--	0.625	--	--	--	--	--	--	--	--	--	--
34	34.00	--	--	--	--	--	--	--	--	0.6	--	--	--	--	--	--	--	--

	0									88								
36	36.000	--	--	--	0.250	--	--	--	--	--	--	--	--	--	--	--	--	--
36	36.000	--	--	--	0.281	--	--	--	--	--	--	--	--	--	--	--	--	--
36	36.000	--	--	--	0.312	0.312	--	--	--	--	--	--	--	--	--	--	--	--
36	36.000	--	--	--	0.344	--	--	--	--	--	--	--	--	--	--	--	--	--
36	36.000	0.375	--	--	0.375	--	--	--	0.375	--	--	--	--	--	--	--	--	--
36	36.000	--	--	--	0.406	--	--	--	--	--	--	--	--	--	--	--	--	--
36	36.000	0.438	--	--	0.438	--	--	--	--	--	--	--	--	--	--	--	--	--
36	36.000	--	--	--	0.469	--	--	--	--	--	--	--	--	--	--	--	--	--
36	36.000	0.500	--	--	0.500	--	0.500	--	--	--	--	0.500	--	--	--	--	--	--
36	36.000	0.562	--	--	0.562	--	--	--	--	--	--	--	--	--	--	--	--	--
36	36.000	0.625	--	--	0.625	--	--	0.625	--	--	--	--	--	--	--	--	--	--
36	36.000	--	--	--	--	--	--	--	--	0.750	--	--	--	--	--	--	--	--
38	38.000	--	--	--	0.312	--	--	--	--	--	--	--	--	--	--	--	--	--
38	38.000	--	--	--	0.344	--	--	--	--	--	--	--	--	--	--	--	--	--
38	38.000	--	--	--	0.375	--	--	--	--	--	--	--	--	--	--	--	--	--
38	38.00	--	--	--	0.	--	--	--	--	--	--	--	--	--	--	--	--	--

	0				406													
38	38.000	--	--	--	0.438	--	--	--	--	--	--	--	--	--	--	--	--	--
38	38.000	--	--	--	0.469	--	--	--	--	--	--	--	--	--	--	--	--	--
38	38.000	--	--	--	0.500	--	--	--	--	--	--	--	--	--	--	--	--	--
38	38.000	--	--	--	0.562	--	--	--	--	--	--	--	--	--	--	--	--	--
38	38.000	--	--	--	0.625	--	--	--	--	--	--	--	--	--	--	--	--	--
40	40.000	--	--	--	0.344	--	--	--	--	--	--	--	--	--	--	--	--	--
40	40.000	--	--	--	0.375	--	--	--	--	--	--	--	--	--	--	--	--	--
40	40.000	--	--	--	0.406	--	--	--	--	--	--	--	--	--	--	--	--	--
40	40.000	--	--	--	0.438	--	--	--	--	--	--	--	--	--	--	--	--	--
40	40.000	--	--	--	0.469	--	--	--	--	--	--	--	--	--	--	--	--	--
40	40.000	--	--	--	0.500	--	--	--	--	--	--	--	--	--	--	--	--	--
40	40.000	--	--	--	0.562	--	--	--	--	--	--	--	--	--	--	--	--	--
40	40.000	--	--	--	0.625	--	--	--	--	--	--	--	--	--	--	--	--	--
42	42.000	--	--	--	0.375	--	--	--	--	--	--	--	--	--	--	--	--	--
42	42.000	--	--	--	0.40	--	--	--	--	--	--	--	--	--	--	--	--	--

					6													
42	42.000	--	--	--	0.438	--	--	--	--	--	--	--	--	--	--	--	--	--
42	42.000	--	--	--	0.469	--	--	--	--	--	--	--	--	--	--	--	--	--
42	42.000	--	--	--	0.500	--	--	--	--	--	--	--	--	--	--	--	--	--
42	42.000	--	--	--	0.562	--	--	--	--	--	--	--	--	--	--	--	--	--
42	42.000	--	--	--	0.625	--	--	--	--	--	--	--	--	--	--	--	--	--
1/8 TO 10	40	STANDARD WALL																
1/8 TO 8	80	EXTRA STRONG WALL																
10	60	EXTRA STRONG WALL																
14	30	STANDARD WALL																
16	30	STANDARD WALL																
16	40	EXTRA STRONG WALL																
20 TO 24	20	STANDARD WALL																
20 TO 22	30	EXTRA STRONG WALL																
26 TO	20	EXTRA STRON																

36 G
WALL

(EXTRACTED FROM AMERICAN STANDARD WROUGHT-STEEL AND WROUGHT-IRON PIPE (ANS B36.10-1970) WITH THE PERMISSION OF THE PUBLISHER, THE AMERICAN SOCIETY OF MECHANICAL ENGINEERS, 29 WEST 39TH STREET, NEW YORK 18, N.Y.) (EXTRACTED FROM AMERICAN PETROLEUM INSTITUTE 5L AND 5LX STANDARDS FOR LINE PIPE AND HEIGHT-TEST LINE PIPE WITH THE PERMISSION OF THE DIRECTOR, DIVISION OF PUBLICATION, 300 CORRIGAN TOWERS BUILDING, DALLAS 1, TEXAS.)

ALL DIMENSIONS ARE GIVEN IN INCHES.

NOTE 1 - WHEN THE API "WALL THICKNESS" IS THE SAME AS THE ASA WALL THICKNESS, UTILIZE THE ASA WALL THICKNESS DESIGNATION TERMINOLOGY FOR DESCRIBING ALL ITEMS.

WALL THICKNESS FOR NOMINAL PIPE SIZES LISTED BELOW UNDER COLUMN 1 FOR THE SCHEDULES LISTED UNDER COLUMN 2 ARE IDENTICAL WITH THE WALL THICKNESSES LISTED UNDER COLUMN 3. USE COLUMN 2 TERMINOLOGY.

THE DECIMAL THICKNESSES LISTED FOR THE RESPECTIVE PIPE SIZES REPRESENT THEIR NOMINAL OR AVERAGE WALL DIMENSIONS. FOR TOLERANCES ON WALL THICKNESSES, SEE APPROPRIATE MATERIAL SPECIFICATIONS. UNLESS OTHERWISE PROVIDED BY THE SPECIFICATION, THE ACTUAL WALL THICKNESS AT ANY POINT SHALL NOT BE MORE THAN 12.5 PERCENT UNDER THE NOMINAL WALL THICKNESS SHOWN IN THE TABLES. PERMISSIBLE VARIATIONS FOR OTHER DIMENSIONS ARE INDICATED IN EACH SPECIFICATION.

NOTE 2 - ITEMS CONFORMING TO THE DIMENSIONS LISTED IN THE CHART SHALL BE APPLICABLE TO "PIPE." ALL OTHER ITEMS NOT CONFORMING TO THE DIMENSIONS OF THE CHART SHALL BE APPLICABLE TO "TUBE."

WELDED WROUGHT-IRON PIPE WALL DIMENSIONS

NOMINAL PIPE SIZE	OUTSIDE DIAMETER	NOMINAL WALL THICKNESS		
STANDARD WALL	EXTRA STRONG WALL	DOUBLE EXTRA STRONG WALL		
1/8	0.405	0.069	0.099	-
1/4	0.540	0.090	0.122	-
3/8	0.675	0.093	0.129	-
1/2	0.840	0.111	0.151	0.307
3/4	1.050	0.115	0.157	0.318
1	1.315	0.136	0.183	0.369
1-1/4	1.660	0.143	0.195	0.393
1-1/2	1.900	0.148	0.204	0.411
2	2.375	0.158	0.223	0.447
2-1/2	2.875	0.208	0.282	0.567
3	3.500	0.221	0.306	0.615
*3-1/2	*4.000	*0.231	*0.325	-
*3-1/2	*4.000	*0.231	*0.325	*0.651
4	4.500	0.242	0.344	0.690
5	5.563	0.263	0.383	0.768
6	6.625	0.286	0.441	0.884
8	8.625	0.329	0.510	0.895
10	10.750	0.372	0.510	-
12	12.750	0.383	0.510	-
*12	*12.750	0.336	-	-
14	14.000	0.383	0.510	-
16	16.000	0.383	0.510	-
18	18.000	0.383	0.510	-
20	20.000	0.383	0.510	-
24	24.000	0.383	0.510	-

ALL DIMENSIONS ARE GIVEN IN INCHES. THE DECIMAL THICKNESS LISTED FOR THE RESPECTIVE PIPE SIZES REPRESENT THEIR NOM OR AVERAGE WALL DIMENSIONS. FOR TOLERANCES ON WALL THICKNESSES, SEE APPROPRIATE MATERIAL SPECIFICATION.

UNLESS OTHERWISE PROVIDED BY THE SPECIFICATION, THE ACTUAL WALL THICKNESS AT ANY POINT SHALL NOT BE MORE THAN 12.5 PERCENT

UNDER THE NOMINAL WALL THICKNESS SHOWN IN THE TABLES. PERMISSIBLE VARIATIONS FOR OTHER DIMENSIONS ARE INDICATED IN EACH SPECIFICATION.

NOTE-ITEMS CONFORMING TO THE ABOVE DIMENSIONS SHALL BE APPLICABLE TO "PIPE." ALL OTHER DIMENSIONS SHALL BE APPLICABLE TO "TUBE."

*CONSIDERED SPECIAL SIZE PIPE. DOES NOT CONFORM TO ASA B36.10.

(EXTRACTED FROM AMERICAN STANDARD WROUGHT-STEEL AND WROUGHT-IRON PIPE (ASA B36.10-1950), WITH THE PERMISSION OF THE PUBLISHER, THE AMERICAN SOCIETY OF MECHANICAL ENGINEERS, 29 W. 39TH ST., NEW YORK 18, N.Y.)

INCH TO DECIMAL OF A FOOT CONVERSION CHART

NOTE: For inches, select inches 0 through 11 from left to right top of chart, read decimal equivalent in column directly below.

Fraction of inch	INCHES											
	0	1	2	3	4	5	6	7	8	9	10	11
0	0.000	0.083	0.167	0.250	0.333	0.417	0.500	0.583	0.667	0.750	0.833	0.917
1/16	.005	.089	.172	.255	.339	.422	.505	.589	.672	.755	.839	.922
1/8	.010	.094	.177	.260	.344	.427	.510	.594	.677	.760	.844	.927
3/16	.016	.099	.182	.266	.349	.432	.516	.599	.682	.766	.849	.932
1/4	.021	.104	.188	.271	.354	.438	.521	.604	.688	.771	.854	.938
5/16	.026	.109	.193	.276	.359	.443	.526	.609	.693	.776	.859	.943
3/8	.031	.115	.198	.281	.365	.448	.531	.615	.698	.781	.865	.948
7/16	.037	.120	.203	.287	.370	.453	.537	.620	.703	.787	.870	.953
1/2	.042	.125	.208	.292	.375	.458	.542	.625	.708	.792	.875	.958
9/16	.047	.130	.214	.297	.380	.464	.547	.630	.714	.797	.880	.964
5/8	.052	.135	.219	.302	.385	.469	.552	.635	.719	.802	.885	.969
11/16	.057	.141	.224	.307	.391	.474	.557	.641	.724	.807	.891	.974
3/4	.063	.146	.229	.313	.396	.479	.563	.646	.729	.813	.896	.979
13/16	.068	.151	.234	.318	.401	.484	.568	.651	.734	.818	.901	.984
7/8	.073	.156	.240	.323	.406	.490	.573	.656	.740	.823	.906	.990
15/16	.078	.162	.245	.328	.412	.495	.578	.662	.745	.828	.912	.995

STANDARD FRACTION TO DECIMAL CONVERSION CHART

4ths	8ths	16ths	32nds	64ths	To 3	To 4	4ths	8ths	16ths	32nds	64ths	To 3	To 4
				1/64	.016	.0156					33/64	.516	.5156
			1/32	-----	.031	.0312				17/32	------	.531	.5312
				3/64	.047	.0469					35/64	.547	.5469
		1/16	-----		.062	.0625			9/16	-----	-----	.562	.5625
				5/64	.078	.0781					37/64	.578	.5781
			3/32	-----	.094	.0938				19/32	------	.594	.5938
				7/64	.109	.1094					39/64	.609	.6094
	1/8	-----	-----	-----	.125	.1250		5/8	-----	-----	-----	.625	.6250
				9/64	.141	.1406					41/64	.641	.6406
			5/32	-----	.156	.1562				21/32	------	.656	.6562
				11/64	.172	.1719					43/64	.672	.6719
		3/16	-----	-----	.188	.1875			11/16	-----	-----	.688	.6875
				13/64	.203	.2031					45/64	.703	.7031
			7/32	------	.219	.2188				23/32	------	.719	.7188
				15/64	.234	.2344					47/64	.734	.7344
1/4	-----	-----	-----	-----	.250	.2500	3/4	-----	-----	-----	-----	.750	.7500
				17/64	.266	.2656					49/64	.766	.7656
			9/32	------	.281	.2812				25/32	------	.781	.7812
				19/64	.297	.2969					51/64	.797	.7969
		5/16	-----	-----	.312	.3125			13/16	-----	-----	.812	.8125
				21/64	.328	.3281					53/64	.828	.8281
			11/32	------	.344	.3438				27/32	------	.844	.8438
				23/64	.359	.3594					55/64	.859	.8594
	3/8	-----	-----	-----	.375	.3750		7/8	-----	-----	-----	.875	.8750
				25/64	.391	.3906					57/64	.891	.8906
			13/32	------	.406	.4062				29/32	------	.906	.9062
				27/64	.422	.4219					59/64	.922	.9219
		7/16	-----	-----	.438	.4375			15/16	-----	-----	.938	.9375
				29/64	.453	.4531					61/64	.953	.9531
			15/32	------	.469	.4688				31/32	------	.969	.9688
				31/64	.484	.4844					63/64	.984	.9844
					.500	.5000						1.000	1.0000

IDENTIFIED SECONDARY ADDRESS CODING

I/SAC	LOCATION
1A	FAN MOTOR
1B	HEATER
1C	ELECTROSTATIC PRECIPITATOR

FIIG Change List

FIIG Change List, Effective September 3, 2010

This change replaced with ISAC or and/or coding.