FEDERAL ITEM IDENTIFICATION GUIDE

GAS CYLINDERS

This Reprint replaces FIIG T162, dated June 4, 2010.

Commander

Defense Logistics Information Service

ATTN: DLIS-K

74 Washington Avenue North, Suite 7

Battle Creek, Michigan 49037-3084

(COMM) (269) 961-5779

(DSN) 661-5779

PUBLISHED BY DEFENSE LOGISTICS INFORMATION SERVICE, BATTLE CREEK, MI

This Federal Item Identification Guide for Supply Cataloging is issued under the authority of Department of Defense Instruction 5025.7.

The use of this publication is mandatory for US. Federal Activities participating in Federal Catalog System Operations.

BY ORDER OF THE DIRECTOR

/s/

Commander

Defense Logistics Information Service

Contents

GENERAL INFORMATION 1
MRC Index 6
INDEX OF APPROVED ITEM NAMES COVERED BY THIS FIIG 9
APPLICABILITY KEY INDEX 20
Body 24
SECTION: A 24
SECTION: B 32
SECTION: C 42
SECTION: STANDARD 47
SECTION: SUPPTECH 53
Reply Tables 57
Reference Drawing Groups 64
Technical Data Tables 75
FIIG Change List 84

GENERAL INFORMATION

1. Purpose and Scope

This Federal Item Identification Guide (FIIG) is a self-contained document for the collection, coding, transmittal, and retrieval of item characteristics and related supply management data for an item of supply for logistical use. This FIIG is to be used to describe items of supply identified by the index of approved item names appearing in this section.

2. Contents

This FIIG is comprised of the following:

Index of Approved Item Names Covered by this FIIG
Applicability Key Index
Section I - Item Characteristics Data Requirements
Section III - New text that should be here.
Appendix A - Reply Tables
Appendix B - Reference Drawing Groups (as applicable)
Appendix C - Technical Data Tables (as applicable)

a. Index of Approved Item Names Covered by this FIIG:

The index lists the approved item names with definitions and item name codes as they appear in Cataloging Handbook H6, applicable to this FIIG. In addition, each name entry is assigned an applicability key for use in relating the characteristics requirements in Section I to the specific item name.

b. Applicability Key Index:

The purpose of this index is to provide the user with a ready reference for determining the specific requirements which are applicable to a given approved item name. This index lists all requirements in sequence as they appear in the FIIG. The applicability of a Master Requirement Coded requirement is indicated by the column headed by the specific item name applicability key as follows:

(1) The letter "X" indicates the requirement must be answered for a full descriptive item.

(2) The letters "AR" indicate the requirement is to be answered as required by (1) instructional notes within the FIIG; (2) when the reply is predicated on replies to a related main requirement; or (3) when an asterisk (*) is used in conjunction with the applicability key column in Section I.

(3) A blank in the column indicates the requirement is not applicable to the specific item name.

c. Section I - Item Characteristics Data Requirements:

This section contains the physical and performance characteristics requirements needed to describe and identify an item of supply. These characteristics differentiate one item from all other items of supply and are to be used to meet the needs of all supported functions. This section is arranged in columns. Identification of each column and instructions pertinent thereto are as follows:

(1) Applicability Key:

The first column shows the applicability key(s) for each requirement. It indicates whether the requirement need be satisfied for the item being identified. "ALL" indicates that the requirement must be answered for all items covered by the FIIG. One or more alphabetic character(s) or group of one or more alphabetic characters indicates a response is required when describing items with an approved item name or names represented by the key(s). An asterisk (*) used in conjunction with any applicability key indicates that the characteristic stated in the requirement may not be applicable to all items covered by the FIIG.

(2) Master Requirement Codes (MRC):

A four-position code which is assigned to a FIIG requirement for identification of the requirement, cross-referencing requirements in the various sections and appendices of the FIIG, and for mechanized processing and retrieval of FIIG generated data. Absence of a MRC for a requirement indicates a lead-in to requirements with individual MRCs in Appendix B.

(a) The coding technique for providing MULTIPLE/OPTIONAL responses will not be used for a Section I requirement assigned Mode Code A or L that leads to Appendix B sketches with dimensional requirements.

(b) Identified Secondary Address Coding:

This technique is for extending the Master Requirement Code so that a unique address is provided for each application of the requirement in relation to the item and is authorized only as instructed within the requirement. Responses coded through this technique will always consist of the following: (1) Master Requirement Codes, (2) indicator code (a single numeric character determined by the number of positions contained), (3) identified secondary address code (1 to 3-digit alphabetic codes determined by the number of predicted replies), (4) the mode code, (5) the reply code and/or clear text response, and (6) end with a record separator (*). Steps (1) through (6) are repeated for each application of the requirement.

(c) AND/OR coding:

A technique for extending the Master Requirement Code to provide a distinctive address for multiple responses to the same requirement. Responses coded through this technique will always consist of (1) Master Requirement Code, (2) mode code, (3) the response or reply code (as instructed by the requirement), (4) a single dollar sign ($) for an OR condition, or a double dollar sign ($$) for an AND condition, (5) the mode code, (6) the response or reply code

(followed by conditions (4) through (6) for each of the multiple responses) and (7) end with a record separator (*). NOTE: Apply this technique only when instructed by the requirement sample reply (e.g.).

(3) Mode Code:

A one-position alphabetic code that specifies the manner in which a response will be prepared. Each requirement assigned a MRC is also assigned a mode code. Sample replies follow each FIIG requirement displaying the proper construction of a response for the assigned mode code. The response to a requirement will always be prepared in accordance with the assigned mode code and sample reply except in the following instances:

(a) Use of E Mode Code replies is not authorized. If a reply needed to describe an item is not listed in the applicable table, contact the FIIG Initiator.

(b) Mode Code K may not be used for any requirement unless instructed by the requirement instructions.

(4) Requirement:

This portion includes the characteristics data elements and data use identifiers required to identify and differentiate one item of supply from another, narrative definitions, and explanations as to use and method of expression. Instructions for coding and preparing replies are also provided.

(5) Reply Code:

A code that represents an established authorized reply to a requirement.

d. Section III - Supplementary Technical and Supply Management Data:

This section includes those characteristics requirements necessary to support specific logistics functions other than National Stock Number assignment.

e. Appendix A - Reply Tables:

Tables of authorized replies to requirements and reply codes when the tables are too lengthy for inclusion in Section I/III, when applicable.

f. Appendix B - Reference Drawings:

This appendix contains representative illustrations which portray specific variations of one or more generic characteristics. If reference drawings contain requirements pages to be used in conjunction with illustrations for dimensioning purposes, the requirements pages will contain Master Requirement Codes, mode codes, and a statement of the requirement. A response to requirements on a requirements page is necessary only for those Master Requirement Codes applicable to the illustration selected.

g. Appendix C - Technical Data Tables:

This appendix contains conversion charts and similar data pertinent to the requirements in Section I/III, when applicable.

3. Enter administrative MRC CLQL immediately following the last FIIG requirement reply, as instructed below:

MRC	Mode Code	Requirement	Example
CLQL	G	COLLOQUIAL NAME (common usage name by which an item is known)	CLQLGW OVEN WIRE CLOTH*

4. Special Instructions and Indicator Definitions

a. Measurements:

Unless otherwise indicated within a requirement example, enter all measurements in decimal form, carried to the nearest three decimal places, with a minimum of one digit preceding the decimal. For SI (metric), enter all measurements with a minimum of one digit before and after the decimal. For fraction to decimal conversion, see Appendix C.

b. Indicators:

A cross hatch (#) following an AIN, MRC, Reply Code or Drawing Number indicates for "ALL EXCEPT USA" use only.

5. Indexes

a. Index of Data Requirements

This index is arranged in alphabetic sequence by Master Requirement Code, cross-referenced to the applicable data requirement and page number(s).

b. Index of Approved Item Names

This index is arranged in alphabetic sequence referenced to Applicability Key.

c. Applicability Key Index

This index is arranged in Applicability Key Sequence.

6. Maintenance

Requests for revisions and other changes will be directed to:

[Page Break]

MRC Index

SECTION: A 24
NAME 24
MATL 24
SURF 24
AENF 24
ACKM 25
ACKN 25
AQSQ 25
AQSR 25
ACLL 26
ACLN 26
ACLS 27
ACLT 27
AQSS 27
AQST 27
ACMS 28
ACMU 28
AQSW 29
AQSX 29
ACSL 29
ADVR 30
ABHP 30
AGUD 30
SECTION: B 32
NAME 32
MATL 32
AQSY 32
AJUK 32
ABKC 33
AAJJ 33
AQWX 34
AQWY 34
AQWZ 34
AQXA 34
AQXB 35
AENF 35
AQXC 35
AQXD 36
THDS 36
AAJD 37
AWDP 37

AQXE 38
ABFF 38
AQGA 38
AQXF 39
AJKH 39
AQXG 39
AQXH 39
AQXJ 40
AQXK 40
ADVL 41
ABKW 41
SECTION: C 42
NAME 42
AENF 42
AMQY 42
AAXX 42
AQXL 43
AQXM 43
AQXN 43
AQXP 43
ALTM 44
AQXQ 44
AQXR 44
AQXS 45
AQXT 45
AQXW 45
AQXX 46
AKYD 46
SECTION: STANDARD 47
FEAT 47
TEST 47
SPCL 48
ZZZK 48
ZZZT 49
ZZZW 49
ZZZX 50
ZZZY 50
CRTL 50
PRPY 51
ELRN 51
ELCD 51
SECTION: SUPPTECH 53
SUPP 53
ZZZP 53

FCLS 53
FTLD 53
TMDN 54
RTSE 54
RDAL 54
NTRD 54
ZZZV 55
CZHT 55
CXCY 55

INDEX OF APPROVED ITEM NAMES COVERED BY THIS FIIG

Approved Item Name	INC	App Key
Adapter		
1. (Mechanical) Any modifying part, piece, or device, designed to facilitate connection, provide accommodation, enable application, and to broaden or permit the use of a given item with an unlike item of mechanical equipment when the two items are not designed for direct mating to each other.		
ADAPTER (1), COMPRESSED GAS CYLINDER VALVE CONNECTIONS	21309	AA
An adapter designed to connect a compressed gas cylinder valve outlet to a regulator, charging connection or other mating part having a different connection for the same gas.		
CYLINDER ASSEMBLY, OXYGEN, AIRCRAFT	53313	BA
An item consisting of a cylindrical body, a regulator, and/or other components.		
CYLINDER, COMPRESSED GAS #	03396	BA
Empty cylinder only.		
CYLINDER, COMPRESSED GAS, ACETOGEN	49445	BA
Empty cylinder only.		
CYLINDER, COMPRESSED GAS, ACETYLENE, TECHNICAL	49446	BA
Empty cylinder only.		
CYLINDER, COMPRESSED GAS, AIR, BREATHING	49516	BA
Empty cylinder only.		
CYLINDER, COMPRESSED GAS, AIR, TECHNICAL	49517	BA
Empty cylinder only.		

Approved Item Name	INC	App Key
CYLINDER, COMPRESSED GAS, AMMONIA, TECHNICAL	49447	BA
Empty cylinder only.		
CYLINDER, COMPRESSED GAS, ARGON-CARBON DIOXIDE	49448	BA
Empty cylinder only.		
CYLINDER, COMPRESSED GAS, ARGON-CARBON DIOXIDE-OXYGEN	49449	BA
Empty cylinder only.		
CYLINDER, COMPRESSED GAS, ARGON, LIQUID	49450	BA
Empty cylinder only.		
CYLINDER, COMPRESSED GAS, ARGON-METHANE	49451	BA
Empty cylinder only.		
CYLINDER, COMPRESSED GAS, ARGON-OXYGEN	49452	BA
Empty cylinder only.		
CYLINDER, COMPRESSED GAS, ARGON, TECHNICAL	49453	BA
Empty cylinder only.		
CYLINDER, COMPRESSED GAS, BORON TRIFLUORIDE, TECHNICAL	49454	BA
Empty cylinder only.		
CYLINDER, COMPRESSED GAS, BROMOCHLORODIFLUOROMETHANE, TECHNICAL	49455	BA
Empty cylinder only.		

Approved Item Name	INC	App Key
CYLINDER, COMPRESSED GAS, BUTANE	49456	BA
Empty cylinder only.		
CYLINDER, COMPRESSED GAS, BUTANE-PROPANE MIXTURE	49457	BA
Empty cylinder only.		
CYLINDER, COMPRESSED GAS, CALIBRATING GAS MIXTURE	49458	BA
Empty cylinder only.		
CYLINDER, COMPRESSED GAS, CARBON DIOXIDE #	50328	BA
Empty cylinder only.		
CYLINDER, COMPRESSED GAS, CARBON DIOXIDE-HELIUM-OXYGEN-NITROGEN	49459	BA
Empty cylinder only.		
CYLINDER, COMPRESSED GAS, CARBON DIOXIDE-NITROGEN-OXYGEN	49460	BA
Empty cylinder only.		
CYLINDER, COMPRESSED GAS, CARBON DIOXIDE-OXYGEN	49461	BA
Empty cylinder only.		
CYLINDER, COMPRESSED GAS, CARBON DIOXIDE, TECHNICAL	49462	BA
Empty cylinder only.		
CYLINDER, COMPRESSED GAS, CARBON DIOXIDE, USP	49463	BA
Empty cylinder only.		

Approved Item Name	INC	App Key
CYLINDER, COMPRESSED GAS, CARBON MONOXIDE, TECHNICAL	49464	BA
Empty cylinder only.		
CYLINDER, COMPRESSED GAS, CHLORINE, TECHNICAL	49465	BA
Empty cylinder only.		
CYLINDER, COMPRESSED GAS, CHLOROTETRAFLUOROETHANE, TECHNICAL	51165	BA
Empty cylinder only.		
CYLINDER, COMPRESSED GAS, CYCLOPROPANE, USP	49466	BA
Empty cylinder only.		
CYLINDER, COMPRESSED GAS, DIBROMODIFLUOROMETHANE, TECHNICAL	49467	BA
Empty cylinder only.		
CYLINDER, COMPRESSED GAS, DICHLORODIFLUOROMETHANE AND DIFLUOROETHANE, AZEOTROPIC MIXTURE	49469	BA
Empty cylinder only.		
CYLINDER, COMPRESSED GAS, DICHLORODIFLUOROMETHANE, TECHNICAL	49468	BA
Empty cylinder only.		
CYLINDER, COMPRESSED GAS, DICHLOROTETRAFLUOROETHANE, TECHNICAL	49470	BA
Empty cylinder only.		

Approved Item Name	INC	App Key
CYLINDER, COMPRESSED GAS, DICHLOROTRIFLUOROETHANE, TECHNICAL	51166	BA
Empty cylinder only.		
CYLINDER, COMPRESSED GAS, ETHANE, TECHNICAL	49471	BA
Empty cylinder only.		
CYLINDER, COMPRESSED GAS, ETHYL CHLORIDE, TECHNICAL	49472	BA
Empty cylinder only.		
CYLINDER, COMPRESSED GAS, ETHYLENE OXIDE-CARBON DIOXIDE	49473	BA
Empty cylinder only.		
CYLINDER, COMPRESSED GAS, ETHYLENE OXIDE, TECHNICAL	49474	BA
Empty cylinder only.		
CYLINDER, COMPRESSED GAS, ETHYLENE TECHNICAL	49475	BA
Empty cylinder only.		
CYLINDER, COMPRESSED GAS, HELIUM #	50327	BA
Empty cylinder only.		
CYLINDER, COMPRESSED GAS, HELIUM-ARGON	49478	BA
Empty cylinder only.		
CYLINDER, COMPRESSED GAS, HELIUM-BUTANE	49479	BA
Empty cylinder only.		

Approved Item Name	INC	App Key
CYLINDER, COMPRESSED GAS, HELIUM-ISOBUTANE	49480	BA
Empty cylinder only.		
CYLINDER, COMPRESSED GAS, HELIUM-METHANE	49481	BA
Empty cylinder only.		
CYLINDER, COMPRESSED GAS, HELIUM-NITROGEN	49482	BA
Empty cylinder only.		
CYLINDER, COMPRESSED GAS, HELIUM-OXYGEN	49483	BA
Empty cylinder only.		
CYLINDER, COMPRESSED GAS, HELIUM, TECHNICAL	49484	BA
Empty cylinder only.		
CYLINDER, COMPRESSED GAS, HELIUM, USP	49485	BA
Empty cylinder only.		
CYLINDER, COMPRESSED GAS, HEXAFLUOROETHANE, TECHNICAL	49486	BA
Empty cylinder only.		
CYLINDER, COMPRESSED GAS, HEXAFLUOROPROPANE	53034	BA
Empty cylinder only.		
CYLINDER, COMPRESSED GAS, HYDRAZINE PROPELLANT	51457	BA
Empty cylinder only.		
CYLINDER, COMPRESSED GAS, HYDROGEN-ARGON	49487	BA
Empty cylinder only.		

Approved Item Name	INC	App Key
CYLINDER, COMPRESSED GAS, HYDROGEN CHLORIDE, ANHYDROUS, TECHNICAL	49488	BA
Empty cylinder only.		
CYLINDER, COMPRESSED GAS, HYDROGEN SULFIDE, TECHNICAL	49489	BA
Empty cylinder only.		
CYLINDER, COMPRESSED GAS, HYDROGEN, TECHNICAL	49490	BA
Empty cylinder only.		
CYLINDER, COMPRESSED GAS, MANUFACTURED, ILLUMINATING	49476	BA
Empty cylinder only.		
CYLINDER, COMPRESSED GAS, METHANE-OXYGEN	49491	BA
Empty cylinder only.		
CYLINDER, COMPRESSED GAS, METHANE, TECHNICAL	49492	BA
Empty cylinder only.		
CYLINDER, COMPRESSED GAS, METHYL BROMIDE, TECHNICAL	49493	BA
Empty cylinder only.		
CYLINDER, COMPRESSED GAS, METHYL CHLORIDE, TECHNICAL	49494	BA
Empty cylinder only.		
CYLINDER, COMPRESSED GAS, MONOBROMOTRIFLUOROMETHANE, TECHNICAL	49515	BA
Empty cylinder only.		

Approved Item Name	INC	App Key
CYLINDER, COMPRESSED GAS, MONOCHLORODIFLUOROMETHANE AND MONOCHLOROPENTAFLUOROETHANE, AZEOTROPIC MIXTURE	49518	BA
Empty cylinder only.		
CYLINDER, COMPRESSED GAS, MONOCHLORODIFLUOROMETHANE, TECHNICAL	49514	BA
Empty cylinder only.		
CYLINDER, COMPRESSED GAS, MONOCHLOROTETRAFLUOROETHANE	53035	BA
Empty cylinder only.		
CYLINDER, COMPRESSED GAS, MONOCHLOROTRIFLUOROMETHANE, TECHNICAL	49513	BA
Empty cylinder only.		
CYLINDER, COMPRESSED GAS, NATURAL, DRY	49477	BA
Empty cylinder only.		
CYLINDER, COMPRESSED GAS, NEON, TECHNICAL	49495	BA
Empty cylinder only.		
CYLINDER, COMPRESSED GAS, NITROGEN #	50326	BA
Emply cylinder only.		
CYLINDER, COMPRESSED GAS, NITROGEN-CARBON DIOXIDE	49496	BA
Empty cylinder only.		

Approved Item Name	INC	App Key
CYLINDER, COMPRESSED GAS, NITROGEN-HYDROGEN	49497	BA
Empty cylinder only.		
CYLINDER, COMPRESSED GAS, NITROGEN, TECHNICAL	49498	BA
Empty cylinder only.		
CYLINDER, COMPRESSED GAS, NITROGEN, USP	49499	BA
Empty cylinder only.		
CYLINDER, COMPRESSED GAS, NITROUS OXIDE #	50325	BA
Empty cylinder only.		
CYLINDER, COMPRESSED GAS, NITROUS OXIDE, TECHNICAL	49500	BA
Empty cylinder only.		
CYLINDER, COMPRESSED GAS, NITROUS OXIDE, USP	49501	BA
Empty cylinder only.		
CYLINDER, COMPRESSED GAS, OXYGEN #	50324	BA
Empty cylinder only.		
CYLINDER, COMPRESSED GAS, OXYGEN, AVAITOR'S BREATHING	49502	BA
Empty cylinder only.		
CYLINDER, COMPRESSED GAS, OXYGEN, LIQUID	49503	BA
Empty cylinder only.		
CYLINDER, COMPRESSED GAS, OXYGEN-NITROGEN	49504	BA
Empty cylinder only.		

Approved Item Name	INC	App Key
CYLINDER, COMPRESSED GAS, OXYGEN, TECHNICAL	49505	BA
Empty cylinder only.		
CYLINDER, COMPRESSED GAS, OXYGEN, USP	49506	BA
Empty cylinder only.		
CYLINDER, COMPRESSED GAS, PROPANE	49507	BA
Empty cylinder only.		
CYLINDER, COMPRESSED GAS, PROPYLENE	67579	BA
Empty cylinder only.		
CYLINDER, COMPRESSED GAS, REFRIGERANT GAS MIXTURE	51167	BA
Empty cylinder only.		
CYLINDER, COMPRESSED GAS, SULFER DIOXIDE, TECHNICAL	49508	BA
Empty cylinder only.		
CYLINDER, COMPRESSED GAS, SULFER HEXAFLUORIDE, TECHNICAL	49509	BA
Empty cylinder only.		
CYLINDER, COMPRESSED GAS, TETRAFLUOROETHANE	50311	BA
Empty cylinder only.		
CYLINDER, COMPRESSED GAS, TRICHLOROMONOFLUOROMETHANE, TECHICAL	49510	BA
Empty cylinder only.		

Approved Item Name	INC	App Key
CYLINDER, COMPRESSED GAS, TRICHLOROTRIFLUOROETHANE, TECHNICAL	49511	BA
Empty cylinder only.		
MANIFOLD, GAS CYLINDER	10840	CA
A device designed to accommodate the attachment of two or more gas cylinders to permit centralization of supply and provide large quantities of gas at constant pressure to single outlet or service line. Excludes items with facilities for charging or recharging the cylinders connected thereto.		

APPLICABILITY KEY INDEX

	AA
NAME	X
MATL	X
SURF	AR
AENF	AR
ACKM	X
ACKN	X
AQSQ	X
AQSR	X
ACLL	X
ACLN	AR
ACLS	AR
ACLT	AR
AQSS	AR
AQST	AR
ACMS	AR
ACMU	AR
AQSW	X
AQSX	X
ACSL	AR
ADVR	AR
ABHP	X
AGUC	AR
AGUD	AR
FEAT	AR
TEST	AR
SPCL	AR
ZZZK	AR
ZZZT	AR
ZZZW	AR
ZZZX	AR
ZZZY	AR
CRTL	AR
PRPY	AR
ELRN	AR
ELCD	AR
SUPP	AR
ZZZP	AR
FCLS	AR
FTLD	AR
TMDN	AR
RTSE	AR
RDAL	AR
NTRD	AR
ZZZV	AR
CZHT	AR
CXCY	AR

	BA
NAME	X
AQSY	X
AJUK	X
ABKC	AR
AAJJ	AR
AQWX	AR
AQWY	AR
AQWZ	AR
AQXA	AR
AQXB	AR
AENF	AR
AQXC	AR
AQXD	X
THDS	AR
AAJD	AR
AWDP	AR
AQXE	X
ABFF	AR
AQGA	AR
AQXF	AR
AJKH	AR
AQXG	AR
AQXH	AR
AQXJ	AR
AQXK	AR
ADVL	X
ABKW	X
FEAT	AR
TEST	AR
SPCL	AR
ZZZK	AR
ZZZT	AR
ZZZW	AR
ZZZX	AR
ZZZY	AR
CRTL	AR
PRPY	AR
ELRN	AR
ELCD	AR
SUPP	AR
ZZZP	AR
FCLS	AR
FTLD	AR
TMDN	AR
RTSE	AR
RDAL	AR
NTRD	AR
ZZZV	AR
CZHT	AR
CXCY	AR

	CA
NAME	X
AENF	X
AMQY	X
AAXX	AR
AQXL	AR
AQXM	AR
AQXN	AR
AQXP	AR
ALTM	AR
AQXQ	X
AQXR	AR
AQXS	AR
AQXT	X
AQXW	X
AQXX	X
AKYD	AR
FEAT	AR
TEST	AR
SPCL	AR
ZZZK	AR
ZZZT	AR
ZZZW	AR
ZZZX	AR
ZZZY	AR
CRTL	AR
PRPY	AR
ELRN	AR
ELCD	AR
SUPP	AR
ZZZP	AR
FCLS	AR
FTLD	AR
TMDN	AR
RTSE	AR
RDAL	AR
NTRD	AR
ZZZV	AR
CZHT	AR
CXCY	AR

[Page Break]

Body

SECTION: A

APP Key	MRC	Mode Code	Requirements
ALL			
	NAME	D	ITEM NAME

Definition: A NOUN, WITH OR WITHOUT MODIFIERS, BY WHICH AN ITEM OF SUPPLY IS KNOWN.

Reply Instructions: Enter the applicable item Name Code from the index appearing in the General Information Section. (e.g., NAMED21309*)

ALL

MATL	D	MATERIAL

Definition: THE ELEMENT, COMPOUND, OR MIXTURE OF WHICH AN ITEM IS FABRICATED, EXCLUDING ANY SURFACE TREATMENT.

Reply Instructions: Enter the applicable Reply Code from Appendix A , Table 1. (e.g., MATLDBR0000*; MATLDBR0000$$DBN0000*; MATLDBR0000$DBN0000*)

ALL*

SURF	D	SURFACE TREATMENT

Definition: CONSISTS OF PLATING, DIP, AND/OR COATING THAT CANNOT BE WIPED OFF. PLATING AND/OR COATING IS ANY CHEMICAL AND/OR METALLIC ADDITIVE, ELECTROCHEMICAL, OR MILD MECHANICAL PROCESS WHICH PROTECTS A SURFACE.

Reply Instructions: Enter the applicable Reply Code from Appendix A , Table 2. (e.g., SURFDCRA000*; SURFDCRA000$$DNFG000*; SURFDNFG000$DZNS000*)

ALL*

AENF	D	SPECIFIC GAS FOR WHICH DESIGNED

Definition: THE SPECIFIC GAS WITH WHICH THE ITEM IS DESIGNED TO BE USED.

APP Key	MRC	Mode Code	Requirements

Reply Instructions: Enter the applicable Reply Code from Appendix A , Table 3. (e.g., AENFDBL*; AENFDBT$DHM*)

ALL

ACKM D FIRST END CONNECTION TYPE

Definition: A NARRATIVE DESCRIPTION OF THE TYPE OF END CONNECTION.

Reply Instructions: Enter the applicable Reply Code from the table below. (e.g., ACKMDAT*; ACKMDAT$DAU*)

If ends are of different types, the largest female end will be described as the first end. If ends are of the same type, the largest end will be described as the first end.

REPLY CODE	REPLY (AB76)
AU	THREADED EXTERNAL GAS CYLINDER
AT	THREADED INTERNAL GAS CYLINDER

ALL

ACKN L FIRST END STYLE DESIGNATOR

Definition: THE STYLE DESIGNATION INDICATING THE CONFIGURATION THAT MOST NEARLY CORRESPONDS TO THE APPEARANCE OF THE END.

Reply Instructions: Enter the applicable style number from Appendix B , Reference Drawing Group A. (e.g., ACKNL8*)

ALL

AQSQ A FIRST END THREAD SIZE

Definition: DESIGNATES THE THREAD DIAMETER AND NUMBER OF THREADS PER INCH OF THE FIRST END.

Reply Instructions: Enter the thread size.

(e.g., AQSQA1/2-20*)

ALL

AQSR D FIRST END THREAD SERIES/TYPE

APP Key	MRC	Mode Code	Requirements
			DESIGNATOR

Definition: DESIGNATES THE SERIES/TYPE OF THE THREADS OF THE FIRST END.

Reply Instructions: Enter the applicable Reply Code from Appendix A , Table 4. (e.g., AQSRDNG*)

ALL

ACLL	D	FIRST END THREAD DIRECTION

Definition: THE DIRECTION OF THE THREAD WHEN VIEWED AXIALLY. A RIGHT-HAND THREAD WINDS IN A CLOCKWISE DIRECTION WHILE A LEFT-HAND THREAD WINDS IN A COUNTERCLOCKWISE DIRECTION.

Reply Instructions: Enter the applicable Reply Code from the table below. (e.g., ACLLDL*)

REPLY CODE	REPLY (AA38)
L	LEFT-HAND
R	RIGHT-HAND

ALL*

ACLN	J	FIRST END REDUCED PASSAGE INSIDE DIAMETER

Definition: THE LENGTH OF A STRAIGHT LINE WHICH PASSES THROUGH THE CENTER OF THE FIRST END REDUCED PASSAGE, AND TERMINATES AT THE INSIDE CIRCUMFERENCE.

Reply Instructions: Enter the applicable Reply Codes from Tables 1 and 2 below, followed by the numeric value. (e.g., ACLNJAA0.125*; ACLNJAB0.125$$JAC0.140*)

Table 1

REPLY CODE	REPLY (AA05)
A	INCHES
L	MILLIMETERS

Table 2

REPLY CODE	REPLY (AC20)
A	NOMINAL

APP Key	MRC	Mode Code	Requirements
		B	MINIMUM
		C	MAXIMUM

ALL*

ACLS D SECOND END CONNECTION TYPE

Definition: A NARRATIVE DESCRIPTION OF THE TYPE OF END CONNECTION.

Reply Instructions: Enter the applicable Reply Code from the table below. (e.g., ACLSDAU*)

REPLY CODE	REPLY (AB76)
AU	THREADED EXTERNAL GAS CYLINDER
AT	THREADED INTERNAL GAS CYLINDER

ALL*

ACLT L SECOND END STYLE DESIGNATOR

Definition: THE STYLE DESIGNATION INDICATING THE CONFIGURATION THAT MOST NEARLY CORRESPONDS TO THE APPEARANCE OF THE END.

Reply Instructions: Enter the applicable style number from Appendix B , Reference Drawing Group A. (e.g., ACLTL38*)

ALL*

AQSS A SECOND END THREAD SIZE

Definition: DESIGNATES THE THREAD DIAMETER AND NUMBER OF THREADS PER INCH OF THE SECOND END.

Reply Instructions: Enter the thread size.

(e.g., AQSSA0.628-20*)

ALL*

AQST D SECOND END THREAD SERIES/TYPE DESIGNATOR

APP Key	MRC	Mode Code	Requirements

Definition: DESIGNATES THE SERIES/TYPE OF THE THREADS OF THE SECOND END.

Reply Instructions: Enter the applicable Reply Code from Appendix A , Table 4. (e.g., AQSTDNF*)

ALL*

ACMS	D	SECOND END THREAD DIRECTION

Definition: THE DIRECTION OF THE THREAD WHEN VIEWED AXIALLY. A RIGHT-HAND THREAD WINDS IN A CLOCKWISE DIRECTION WHILE A LEFT-HAND THREAD WINDS IN A COUNTERCLOCKWISE DIRECTION.

Reply Instructions: Enter the applicable Reply Code from the table below. (e.g., ACMSDR*)

REPLY CODE	REPLY (AA38)
L	LEFT-HAND
R	RIGHT-HAND

ALL*

ACMU	J	SECOND END REDUCED PASSAGE INSIDE DIAMETER

Definition: THE LENGTH OF A STRAIGHT LINE WHICH PASSES THROUGH THE CENTER OF THE SECOND END REDUCED PASSAGE, AND TERMINATES AT THE INSIDE CIRCUMFERENCE.

Reply Instructions: Enter the applicable Reply Codes from Tables 1 and 2 below, followed by the numeric value. (e.g., ACMUJAA0.125*; ACMUJLA3.2*; ACMUJAB0.125$$JAC0.141*)

Table 1

REPLY CODE	REPLY (AA05)
A	INCHES
L	MILLIMETERS

Table 2

REPLY CODE	REPLY (AC20)
A	NOMINAL
B	MINIMUM
C	MAXIMUM

APP Key	MRC	Mode Code	Requirements

ALL

AQSW D UNION END

Definition: AN INDICATION OF WHETHER OR NOT A UNION END IS INCLUDED.

Reply Instructions: Enter the applicable Reply Code from the table below. (e.g., AQSWDB*)

REPLY CODE	REPLY (AA49)
B	INCLUDED
C	NOT INCLUDED

ALL

AQSX D WRENCHING FACILITY

Definition: AN INDICATION OF WHETHER OR NOT A WRENCHING FACILITY IS INCLUDED.

Reply Instructions: Enter the applicable Reply Code from the table below. (e.g., AQSXDB*)

REPLY CODE	REPLY (AA49)
B	INCLUDED
C	NOT INCLUDED

ALL*

ACSL D WRENCHING FACILITY SHAPE

Definition: THE PHYSICAL CONFIGURATION OF THE FACILITY UTILIZED TO ASSEMBLE OR DISASSEMBLE THE ITEM.

Reply Instructions: Enter the applicable Reply Code from the table below. (e.g., ACSLDBH*)

REPLY CODE	REPLY (AD07)
BH	ANGULAR
A	ANY ACCEPTABLE

APP Key	MRC	Mode Code	Requirements
		HE	HEXAGONAL
		SQ	SQUARE

ALL*

ADVR	B	ANGLE IN DEG

Definition: THE ANGLE FORMED BY THE ANGULAR PORTION OF THE ITEM, EXPRESSED IN DEGREES.

Reply Instructions: Enter the numeric value. (e.g., ADVRB90.0*)

ALL

ABHP	J	OVERALL LENGTH

Definition: THE DIMENSION MEASURED ALONG THE LONGITUDINAL AXIS WITH TERMINATED POINTS AT THE EXTREME ENDS OF THE ITEM.

Reply Instructions: Enter the applicable Reply Codes from Tables 1 and 2 below, followed by the numeric value. (e.g., ABHPJAA8.000*; ABHPJAB8.125$$JAC8.250*)

Table 1

REPLY CODE	REPLY (AA05)
A	INCHES
L	MILLIMETERS

Table 2

REPLY CODE	REPLY (AC20)
A	NOMINAL
B	MINIMUM
C	MAXIMUM

ALL*

AGUD	D	SUPPLY PACKAGE TYPE

Definition: INDICATES THE TYPE OF PACKAGE IN WHICH THE INTERMEDIATE PACKAGES ARE CONTAINED.

Reply Instructions: Enter the applicable Reply Code from the table below. (e.g., AGUDDAB*)

APP Key	MRC	Mode Code	Requirements
		REPLY CODE	REPLY (AE96)
		A	ANY ACCEPTABLE
		AB	BOX

SECTION: B

APP Key	MRC	Mode Code	Requirements
ALL			
	NAME	D	ITEM NAME

Definition: A NOUN, WITH OR WITHOUT MODIFIERS, BY WHICH AN ITEM OF SUPPLY IS KNOWN.

Reply Instructions: Enter the applicable Item Name Code from the index appearing in the General Information Section. (e.g., NAMED03396*)

NOTE: A REPLY TO THIS MRC IS REQUIRED FOR SCHEDULE B CODE ASSIGNMENT.

BA

MATL D MATERIAL

Definition: THE ELEMENT, COMPOUND, OR MIXTURE OF WHICH AN ITEM IS FABRICATED, EXCLUDING ANY SURFACE TREATMENT.

Reply Instructions: Enter the applicable Reply Code from Appendix A , Table 1. (e.g., MATLDALC000*; MATLDALC000$$DSTD000*; MATLDALC000$DSTD000*)

ALL

AQSY D SHATTERPROOF FEATURE

Definition: AN INDICATION OF WHETHER OR NOT A SHATTERPROOF FEATURE IS INCLUDED.

Reply Instructions: Enter the applicable Reply Code from the table below. (e.g., AQSYDB*)

REPLY CODE	REPLY (AA49)
B	INCLUDED
C	NOT INCLUDED

ALL

AJUK L CYLINDER STYLE

APP Key	MRC	Mode Code	Requirements

Definition: THE STYLE DESIGNATION INDICATING THE CONFIGURATION THAT MOST NEARLY CORRESPONDS TO THE APPEARANCE OF THE CYLINDER.

Reply Instructions: Enter the applicable style number from Appendix B , Reference Drawing Group C. (e.g., AJUKL3*)

ALL*

ABKC	A	DEPARTMENT OF TRANSPORTATION (INTERSTATE COMMERCE COMMISSION) CYLINDER IDENTIFYING NUMBER

Definition: A NUMBER ASSIGNED TO THE ITEM BY THE DEPARTMENT OF TRANSPORTATION (INTERSTATE COMMERCE COMMISSION) TO IDENTIFY THE DESIGN SPECIFICATION AND SERVICE PRESSURE OF THE CYLINDER.

Reply Instructions: Enter the identifying number. (e.g., ABKCA3AA2265*; ABKCA3A2265$A3AA2265*)

ALL*

AAJJ	J	MAXIMUM OPERATING PRESSURE

Definition: THE MAXIMUM PRESSURE AT WHICH AN ITEM IS DESIGNED TO OPERATE.

Reply Instructions: Enter the applicable Reply Code from the table below, followed by the numeric value. (e.g., AAJJJV500.0*)

For items that do not require a rating, change the Mode Code to K and enter Reply Code N. (e.g., AAJJKN*)

Operating pressure is sometimes referred to as a working or service pressure.

REPLY CODE	REPLY (AB18)
K	KILOGRAMS PER SQUARE CENTIMETER
L	KILOPASCALS
V	POUNDS PER SQUARE INCH

NOTE FOR MRC AQWX, AQWY, AQWZ, AQXA, AND AQXB: FOR ILLUSTRATED COLOR MARKING LOCATIONS, COLOR COMBINATION TABLES, TYPE OF GAS, AND CAPACITY MEASUREMENT UNITS, SEE APPENDIX C, TABLE 1.

APP Key	MRC	Mode Code	Requirements

ALL* (See Note Above)

AQWX D PART A COLOR CODE

Definition: THE APPLICATION OF A COLOR OR SERIES OF COLORS TO A SPECIFIC PORTION OF AN ITEM FOR THE EXPRESSED PURPOSE OF DESCRIBING AND/OR IDENTIFYING THE FUNCTIONAL DESIGN OR THE SYSTEM APPLICATION.

Reply Instructions: Enter the applicable Reply Code from Appendix A , Table 6. (e.g., AQWXDYE0000*)

ALL* (See Note Preceding MRC AQWX)

AQWY D PART B COLOR CODE

Definition: THE APPLICATION OF A COLOR OR A SERIES OF COLORS TO A SPECIFIC PORTION OF AN ITEM FOR THE EXPRESSED PURPOSE OF DESCRIBING AND/OR IDENTIFYING THE FUNCTIONAL DESIGN OR THE SYSTEM APPLICATION.

Reply Instructions: Enter the applicable Reply Code from Appendix A , Table 6. (e.g., AQWYDRE0000*)

ALL* (See Note Preceding MRC AQWX)

AQWZ D PART C COLOR CODE

Definition: THE APPLICATION OF A COLOR OR A SERIES OF COLORS TO A SPECIFIC PORTION OF AN ITEM FOR THE EXPRESSED PURPOSE OF DESCRIBING AND/OR IDENTIFYING THE FUNCTIONAL DESIGN OR THE SYSTEM APPLICATION.

Reply Instructions: Enter the applicable Reply Code from Appendix A , Table 6. (e.g., AQWZDBL0000*)

ALL* (See Note Preceding MRC AQWX)

AQXA D BODY COLOR CODE

Definition: THE APPLICATION OF A COLOR OR A SERIES OF COLORS TO THE BODY OF AN ITEM FOR THE EXPRESSED PURPOSE OF DESCRIBING AND/OR IDENTIFYING THE FUNCTIONAL DESIGN OR THE SYSTEM APPLICATION.

APP Key	MRC	Mode Code	Requirements

Reply Instructions: Enter the applicable Reply Code from Appendix A , Table 6. (e.g., AQXADBU0000*)

ALL* (See Note Preceding MRC AQWX)

AQXB D COLOR CODED GAS TYPE

Definition: INDICATES THE TYPE OF GAS CONTAINED IN A COLOR CODED CYLINDER.

Reply Instructions: Enter the applicable Reply Code from Appendix A , Table 3. (e.g., AQXBDAA*; AQXBDAK$$DCG*; AQXBDAK$DCG*)

NOTE FOR MRC AENF: IF CYLINDER IS WITHOUT GAS IDENTIFYING COLOR MARKINGS, REPLY TO MRC AENF.

ALL* (See Note Above)

AENF D SPECIFIC GAS FOR WHICH DESIGNED

Definition: THE SPECIFIC GAS WITH WHICH THE ITEM IS DESIGNED TO BE USED.

Reply Instructions: Enter the applicable Reply Code from Appendix A , Table 3. (e.g., AENFDAA*; AENFDAS$$DCG*; AENFDAS$DCM*)

ALL*

AQXC J CAPACITY RATING

Definition: A MEASUREMENT OF THE CAPACITY OF AN ITEM.

Reply Instructions: Enter the applicable Reply Codes from Tables 1 and 2 below, followed by the numeric value. (e.g., AQXCJBA74.000*; AQXCJBB74.000$$JBC74.500*)

Table 1

REPLY CODE	REPLY (AB10)
J	CUBIC FEET
B	CUBIC INCHES
R	CUBIC METERS
G	GALLONS
K	KILOGRAMS
L	LITERS
P	POUNDS

APP Key	MRC	Mode Code	Requirements

Table 2

REPLY CODE	REPLY (AC20)
A	NOMINAL
B	MINIMUM
C	MAXIMUM

NOTE FOR MRCS AQXD, THDS, AAJD AND AWDP: FOR MULTIPLE REPLIES, USE AND Coding ($$) CODING ENTERING IN THE SAME SEQUENCE AS MRC AQXD.

ALL (See Note Above)

AQXD D NECK THREAD LOCATION

Definition: INDICATES THE LOCATION OF THE THREAD ON THE NECK.

Reply Instructions: Enter the applicable Reply Code from the table below. (e.g., AQXDDABY*;

*AQXDDABY**

AWXDDABX)*

Neck ring shall be considered external.

REPLY CODE	REPLY (AJ91)
ABY	EXTERNAL
ABX	INTERNAL

ALL (See Note Preceding MRC AQXD)*

THDS J THREAD SIZE AND SERIES/TYPE DESIGNATOR

Definition: DESIGNATES THE THREAD DIAMETER, SERIES/TYPE, AND NUMBER OF THREADS PER SPECIFIC MEASUREMENT SCALE

Reply Instructions: Enter the applicable ISAC below followed by the Mode Code, the Reply Code from Appendix A , Table 4, and the thread size.(e.g., THDSJNC3/8-18; THDS1AJNF3/8-18$$JNF5/8-18*; THDS1BJNF5/8-18*)*

REPLY CODE	*REPLY (AB22)*
1C	*BOTH INTERNAL AND EXTERNAL*
1B	*EXTERNAL*
1B	*EXTERNAL*

NOTE FOR MRCS AAJD AND AWDP: IF REPLY CODE NN IS ENTERED FOR MRC THDS, REPLY TO MRCS AAJD AND AWDP.

ALL* (See Note Above and Preceding MRC AQXD)

AAJD A THREAD CLASS

Definition: A NUMERIC-ALPHA DESIGNATOR INDICATING THE PITCH DIAMETER TOLERANCE AND AN EXTERNAL OR INTERNAL THREAD.

Reply Instructions: Enter the applicable ISAC below followed by the Mode Code and the thread class. (e.g.,

AAJD1AA3B*

AAJD1BA3B*)

NOTE FOR MRC AWDP: FOR ITEMS INDICATING A TOLERANCE USE AND CONDITION CODING ($$).

ALL* (See Note Above and Preceding MRCs AQXD and AAJD)

AWDP J THREAD DIAMETER

Definition: THE LENGTH OF A STRAIGHT LINE WHICH PASSES THROUGH THE CENTER OF THE THREADED PORTION, AND TERMINATES AT THE CIRCUMFERENCE.

Reply Instructions: Enter the applicable ISAC from Table 1 below followed by the Mode Code and the applicable Reply Codes from Tables 2 and 3 below, followed by the numeric value. (e.g., AWDP1AJAA0.988; AWDP1AJLA0.750*; AWDP1BJAB0.800$$JAC0.850*)*

Table 1

REPLY CODE	REPLY (AA05)
A	INCHES
L	MILLIMETERS

Table 2

REPLY CODE	REPLY (AC20)
A	NOMINAL
B	MINIMUM
C	MAXIMUM

ALL

AQXE D NECK CLOSURE

Definition: AN INDICATION OF WHETHER OR NOT A NECK CLOSURE IS PROVIDED.

Reply Instructions: Enter the applicable Reply Code from the table below. (e.g., AQXEDB*)

REPLY CODE	REPLY (AB22)
C	NOT PROVIDED
B	PROVIDED

NOTE FOR MRC ABFF: REPLY TO THIS MRC IF REPLY CODE B IS ENTERED FOR MRC AQXE.

ALL* (See Note Above)

ABFF D FURNISHED ITEMS

Definition: ITEMS FURNISHED AS ACCESSORIES WHICH ARE NOT SPECIFIED ELSEWHERE.

Reply Instructions: Enter the applicable Reply Code from the table below. (e.g., ABFFDHW*)

For multiple replies use AND Coding ($$). (e.g.,

ABFF1ADHW*

ABFFDHX$$DBE)*

REPLY CODE	REPLY (AB28)
HW	DISK BODY ASSEMBLY
BE	PLUG
HX	VALVE

ALL*

AQGA G MANUFACTURER NAME

Definition: THE NAME OF THE MANUFACTURER.

Reply Instructions: Enter the reply in clear text. Separate multiple replies with a semicolon. (e.g., AQGAGWALTER KIDDE AND CO, INC*; AQGAGWALTER KIDDE AND CO, INC; SUPERIOR VALVE CO*)

ALL*

AQXF G MANUFACTURER ADDRESS

Definition: THE ADDRESS OF THE MANUFACTURER.

Reply Instructions: Enter the reply in clear text. Separate multiple replies with a semicolon. (e.g., AQXFGBELLEVILLE, N.J.*; AQXFGBELLEVILLE, N.J.; LANCASTER, N.Y.*)

ALL*

AJKH G IDENTIFICATION DESIGNATOR

Definition: A DESIGNATION ASSIGNED TO THE ITEM FOR PURPOSE OF READY IDENTIFICATION.

Reply Instructions: Enter the reply in clear text. Separate multiple replies with a semicolon. (e.g., AJKHGPART NUMBER 870414*; AJKHGPART NUMBER 870414; PART NUMBER 29497*)

ALL*

AQXG G SPEC/STD CONTROLLING AGENCY

Definition: THE NAME OF THE GOVERNMENT AGENCY, COMMERCIAL ORGANIZATION, OR MANUFACTURER CONTROLLING THE SPECIFICATION AND/OR STANDARD.

Reply Instructions: Enter the reply in clear text. Separate multiple replies with a semicolon. (e.g., AQXGGUSAF*;AQXGGUSAF; BUAER*)

NOTE FOR MRCS AQXH AND AQXJ: FOR MULTIPLE REPLIES, USE AND CODING ($$), ENTERING IN THE SAME SEQUENCE AS MRC ABFF.

ALL* (See Note Above)

AQXH J SPEC/STD IDENTIFYING NUMBER

Definition: THE SPECIFICATION OR STANDARD (GOVERNMENTAL OR INDUSTRIAL) THAT SPECIFICALLY COVERS THE ITEM BEING DESCRIBED.

Reply Instructions: Enter the applicable Reply Code from the table below, followed by the governmental or industrial designation, or the manufacturer's name, followed by the identifying number of the document, type, class, or grade. For multiple replies, use AND Coding ($$).

(e.g., AQXHJAMIL-V-17360CLASS3*;

AQXHJAMIL-V-2/14$$JAMIL-V-2/15)*

REPLY CODE	REPLY (AC28)
A	SPECIFICATION (includes engineering type bulletins, brochures, etc., that reflect specification type data in specification format; excludes commercial catalogs, industry directories, and similar trade publications reflecting general type data)
B	STANDARD (includes industry or association standards, individual manufacturers standards as well as government standards)

ALL* (See Note Preceding MRC AQXH)

AQXJ A GOVERNMENT TYPE NUMBER

Definition: THE IDENTIFYING TYPE NUMBER ASSIGNED BY THE GOVERNMENT.

Reply Instructions: Enter the identifying number.

(e.g., AQXJA0-000 AQXJA12-621-1$$A13-661-2*);*

ALL*

AQXK D NECK CLOSURE SIPHON FLEXIBILITY

Definition: AN INDICATION OF THE FLEXIBILITY OF THE NECK CLOSURE SIPHON.

Reply Instructions: Enter the applicable Reply Code from the table below. (e.g., AQXKDB*)

REPLY CODE	REPLY (AD03)
A	FLEXIBLE
B	RIGID

ALL

ADVL J CROSS SECTION OUTSIDE DIAMETER

Definition: THE LENGTH OF A STRAIGHT LINE WHICH PASSES THROUGH THE CENTER OF A CROSS SECTION, AND TERMINATES AT THE OUTSIDE CIRCUMFERENCE.

Reply Instructions: Enter the applicable Reply Codes from Tables 1 and 2 below, followed by the numeric value. (e.g., ADVLJAA7.000*; ADVLJLA177.8*; ADVLJAB7.000$$JAC7.125*)

Table 1

REPLY CODE	REPLY (AA05)
A	INCHES
L	MILLIMETERS

Table 2

REPLY CODE	REPLY (AC20)
A	NOMINAL
B	MINIMUM
C	MAXIMUM

ALL

ABKW J OVERALL HEIGHT

Definition: THE DISTANCE MEASURED IN A STRAIGHT LINE FROM THE BOTTOM TO THE TOP OF AN ITEM.

Reply Instructions: Enter the applicable Reply Codes from Tables 1 and 2 below, followed by the numeric value, excluding the valve or cap. (e.g., ABKWJAA51.000*; ABKWJLA1041.4*; ABKWJAB51.000$$JAC51.500*)

Table 1

REPLY CODE	REPLY (AA05)
A	INCHES
L	MILLIMETERS

Table 2

REPLY CODE	REPLY (AC20)
A	NOMINAL
B	MINIMUM
C	MAXIMUM

SECTION: C

APP Key	MRC	Mode Code	Requirements
ALL			
	NAME	D	ITEM NAME

Definition: A NOUN, WITH OR WITHOUT MODIFIERS, BY WHICH AN ITEM OF SUPPLY IS KNOWN.

Reply Instructions: Enter the applicable Item Name Code from the index appearing in the General Information Section. (e.g., NAMEDl0840*)

ALL

AENF	D	SPECIFIC GAS FOR WHICH DESIGNED

Definition: THE SPECIFIC GAS WITH WHICH THE ITEM IS DESIGNED TO BE USED.

Reply Instructions: Enter the applicable Reply Code from Appendix A , Table 3. (e.g., AENFDAA*; AENFDAJ$$DAS*)

ALL

AMQY	D	INSTALLATION DESIGN

Definition: THE INSTALLATION FOR WHICH THE ITEM IS DESIGNED.

Reply Instructions: Enter the applicable Reply Code from the table below. (e.g., AMQYDAF*)

REPLY CODE	REPLY (AJ17)
AN	FIXED STATION
AF	PORTABLE

NOTE FOR MRCS AAXX, AQXL, AQXN, AQXP, AND ALTM: IF REPLY CODE AN IS ENTERED FOR MRC AMQY, REPLY TO MRCS AAXX, AQXL, AQXN, AND AQXP. IF REPLY CODE AF IS ENTERED FOR MRC AMQY, REPLY TO MRC ALTM.

ALL* (See Note Above)

AAXX	D	MOUNTING TYPE

Definition: INDICATES THE TYPE OF MOUNT UTILIZED TO SUPPORT THE ITEM.

APP Key	MRC	Mode Code	Requirements

Reply Instructions: Enter the applicable Reply Code from the table below. (e.g., AAXXDCP*; AAXXDCPDCADCQ*)

REPLY CODE	REPLY (AA78)
CP	CABINET
CA	FLOOR
CQ	WALL

ALL* (See Note Preceding MRC AAXX)

AQXL D ROW ARRANGEMENT

Definition: AN INDICATION OF THE ROW ARRANGEMENT OF THE ITEM.

Reply Instructions: Enter the applicable Reply Code from the table below. (e.g., AQXLDAB*)

REPLY CODE	REPLY (AH86)
AB	MULTIPLE
AC	SINGLE

NOTE FOR MRC AQXM: IF REPLY CODE AB IS ENTERED FOR MRC AQXL, REPLY TO MRC AQXM.

ALL* (See Note Above and Preceding MRC AAXX)

AQXM A ROW QUANTITY

Definition: THE NUMBER OF ROWS IN AN ITEM.

Reply Instructions: Enter the quantity. (e.g., AQXMA3*)

ALL* (See Note Preceding MRC AAXX)

AQXN A BANK QUANTITY PER ROW

Definition: THE NUMBER OF BANKS IN EACH ROW.

Reply Instructions: Enter the quantity. (e.g., AQXNAl0*)

ALL* (See Note Preceding MRC AAXX)

AQXP A INLET CONNECTION QUANTITY

APP Key	MRC	Mode Code	Requirements

Definition: THE NUMBER OF INLET CONNECTIONS ON THE ITEM.

Reply Instructions: Enter the quantity. (e.g., AQXPA3*)

ALL* (See Note Preceding MRC AAXX)

ALTM D SUPPORT METHOD

Definition: THE MEANS PROVIDED FOR SUPPORTING THE ITEM.

Reply Instructions: Enter the applicable Reply Code from the table below. (e.g., ALTMDAH*; ALTMDAEDAFDAG*)

REPLY CODE	REPLY (AH72)
AD	FOLDING LEGS, ADJUSTABLE
AE	RACK
AH	SELF
AF	SHELF
AG	STAND

ALL

AQXQ D FLEXIBLE PIGTAIL LEAD

Definition: AN INDICATION OF WHETHER OR NOT A FLEXIBLE PIGTAIL LEAD(S) IS INCLUDED.

Reply Instructions: Enter the applicable Reply Code from the table below. (e.g., AQXQDB*)

REPLY CODE	REPLY (AA49)
B	INCLUDED
C	NOT INCLUDED

NOTE FOR MRCS AQXR AND AQXS: IF REPLY CODE B IS ENTERED FOR MRC AQXQ, REPLY TO MRCS AQXR AND AQXS.

ALL* (See Note Above)

AQXR A FLEXIBLE PIGTAIL LEAD QUANTITY

Definition: THE NUMBER OF FLEXIBLE PIGTAIL LEADS SUPPLIED.

APP Key	MRC	Mode Code	Requirements

Reply Instructions: Enter the quantity. (e.g., AQXRAl0*)

ALL* (See Note Preceding MRC AQXR)

AQXS D PIGTAIL FLASH ARRESTOR

Definition: AN INDICATION OF WHETHER OR NOT A PIGTAIL FLASH ARRESTOR(S) IS INCLUDED.

Reply Instructions: Enter the applicable Reply Code from the table below. (e.g., AQXSDB*)

REPLY CODE	REPLY (AA49)
B	INCLUDED
C	NOT INCLUDED

ALL

AQXT D INDIVIDUAL CYLINDER SHUT-OFF VALVE

Definition: AN INDICATION OF WHETHER OR NOT AN INDIVIDUAL CYLINDER SHUT-OFF VALVE(S) IS INCLUDED.

Reply Instructions: Enter the applicable Reply Code from the table below. (e.g., AQXTDB*)

REPLY CODE	REPLY (AA49)
B	INCLUDED
C	NOT INCLUDED

ALL

AQXW D HYDRAULIC BACK PRESSURE VALVE

Definition: AN INDICATION OF WHETHER OR NOT A HYDRAULIC BACK PRESSURE VALVE IS INCLUDED.

Reply Instructions: Enter the applicable Reply Code from the table below. (e.g., AQXWDB*)

REPLY CODE	REPLY (AA49)
B	INCLUDED
C	NOT INCLUDED

APP Key	MRC	Mode Code	Requirements

ALL

AQXX	D	INLET PLUG

Definition: AN INDICATION OF WHETHER OR NOT AN INLET PLUG(S) IS INCLUDED.

Reply Instructions: Enter the applicable Reply Code from the table below. (e.g., AQXXDC*)

REPLY CODE	REPLY (AA49)
B	INCLUDED
C	NOT INCLUDED

ALL*

AKYD	G	ACCESSORY COMPONENTS AND QUANTITY

Definition: THE NAME AND NUMBER OF PARTS SUPPLIED WITH THE ITEM WHICH MAY BE REQUIRED FOR APPLICATION.

Reply Instructions: Enter the reply in clear text. (e.g., AKYDG2 GAGE HIGH PRESSURE 0 TO 300 LB SCALE*)

Separate multiple replies with a semicolon. (e.g., AKYDG2 GAGE HIGH PRESSURE 0 TO 300 LB SCALE;1 VALVE, BLEED*)

SECTION: STANDARD

APP Key	MRC	Mode Code	Requirements
ALL*			
	FEAT	G	SPECIAL FEATURES

Definition: THOSE UNUSUAL OR UNIQUE CHARACTERISTICS OR QUALITIES OF AN ITEM NOT COVERED IN THE OTHER REQUIREMENTS AND WHICH ARE DETERMINED TO BE ESSENTIAL FOR IDENTIFICATION.

Reply Instructions: Enter the reply in clear text. Separate multiple replies with a semicolon. (e.g., FEATGADJUSTABLE NOSE CLIP*; FEATGADJUSTABLE NOSE PIECE; DISPOSABLE*)

ALL*

TEST J TEST DATA DOCUMENT

Definition: THE SPECIFICATION, STANDARD, DRAWING, OR SIMILAR INSTRUMENT THAT SPECIFIES ENVIRONMENTAL AND PERFORMANCE REQUIREMENTS OR TEST CONDITIONS UNDER WHICH AN ITEM IS TESTED AND ESTABLISHES ACCEPTABLE LIMITS WITHIN WHICH THE ITEM MUST CONFORM IDENTIFIED BY AN ALPHABETIC AND/OR NUMERIC REFERENCE NUMBER. INCLUDES THE COMMERCIAL AND GOVERNMENT ENTITY (CAGE) CODE OF THE ENTITY CONTROLLING THE INSTRUMENT.

Reply Instructions: Enter the applicable Reply Code from the table below, followed by the 5-position CAGE Code, a dash, and the document identification number.

(e.g., TESTJA12345-CWX654321*;

TESTJA1234A-654321$$JB5556A-663654*;

TESTJAA2345-654321$JB55566-663654*)

REPLY CODE	REPLY (AC28)
A	SPECIFICATION (Includes engineering type bulletins, brochures, etc., that reflect specification type data in specification format; excludes commercial catalogs, industry directories, and similar trade publications, reflecting general type data on certain environmental and performance requirements and test conditions that are shown as "typical," "average," "nominal," etc.)
B	STANDARD (Includes industry or association standards, individual manufacturer standards, etc.)

APP Key	MRC	Mode Code	Requirements
		C	DRAWING (This is the basic governing drawing, such as a contractor drawing, original equipment manufacturer drawing, etc.; excludes any specification, standard, or other document that may be referenced in a basic governing drawing)

ALL*

SPCL G SPECIAL TEST FEATURES

Definition: TEST CONDITIONS AND RATINGS, OR ENVIRONMENTAL AND PERFORMANCE REQUIREMENTS THAT ARE DIFFERENT, MORE CRITICAL, OR MORE SPECIFIC THAN THOSE SPECIFIED IN A GOVERNING TEST DATA DOCUMENT.

Reply Instructions: Enter the reply in clear text. (e.g., SPCLGSELECTED AND TESTED FOR NAVIGATIONAL SYSTEMS*)

ALL*

ZZZK J SPECIFICATION/STANDARD DATA

Definition: THE DOCUMENT DESIGNATOR OF THE SPECIFICATION OR STANDARD WHICH ESTABLISHED THE ITEM OF SUPPLY.

Reply Instructions: Enter the applicable Reply Code from the table below, followed by the Commercial and Government Entity (CAGE) Code of the entity controlling the document, a dash, and the document designator. The agency that controls the limited coordination document must be preceded and followed by a slash following the designator. The word canceled or superseded must be preceded and followed by a slash for the designator. Professional and industrial association specifications/standards are differentiated from a manufacturer's specification in that the data has been coordinated and published by the professional and industrial association. Include amendments and revisions where applicable.

(e.g., ZZZKJT81337-30642B*;

ZZZKJS81349-MIL-D-180 REV1/CANCELED/*;

ZZZKJP80205-NAS1103*;

ZZZKJS81349-MIL-C-1140C/CE/*;

ZZZKJT81337-30642B$$JP80205-NAS1103*)

APP Key	MRC	Mode Code	Requirements

REPLY CODE	REPLY (AN62)
S	GOVERNMENT SPECIFICATION
T	GOVERNMENT STANDARD
D	MANUFACTURERS SOURCE CONTROL
R	MANUFACTURERS SPECIFICATION
N	MANUFACTURERS SPECIFICATION CONTROL
M	MANUFACTURERS STANDARD
B	NATIONAL STD/SPEC
A	PROFESSIONAL/INDUSTRIAL ASSOCIATION SPECIFICATION
P	PROFESSIONAL/INDUSTRIAL ASSOCIATION STANDARD

NOTE FOR MRC ZZZT: IF THE SPECIFICIATION/STANDARD CITED IN REPLY TO MRC ZZZK IS NONDEFINITIVE, REPLY TO MRC ZZZT. THIS REPLY IS THE DATA WHICH IS NOT RECORDED IN SEGMENT C.

ALL* (See Note Above)

ZZZT J NONDEFINITIVE SPEC/STD DATA

Definition: THE NUMBER, LETTER, OR SYMBOL THAT INDICATES THE TYPE, STYLE, GRADE, CLASS, AND THE LIKE, OF AN ITEM IN A NONIDENTIFYING SPECIFICATION OR STANDARD.

Reply Instructions: Enter the applicable Reply Code from Appendix A , Table 5, followed by the appropriate number, letter, or symbol. (e.g., ZZZTJTY1*; ZZZTJTY1$$JSTA*; ZZZTJTY1$JSTA*)

ALL*

ZZZW G DEPARTURE FROM CITED DOCUMENT

Definition: THE TECHNICAL DIFFERENTIATING CHARACTERISTIC(S) OF AN ITEM OF SUPPLY WHICH DEPART(S) FROM THE TEXT OF A SPECIFICATION OR A STANDARD IN THAT IT REPRESENTS A SELECTION OF CHARACTERISTICS STATED IN THE SPECIFICATION OR STANDARD AS BEING OPTIONAL, OR A VARIATION FROM ONE OR MORE OF THE STATED CHARACTERISTICS, OR AN ADDITIONAL CHARACTERISTIC NOT STATED IN THE SPECIFICATION OR STANDARD.

Reply Instructions: Enter the reply in clear text. (e.g., ZZZWGAS MODIFIED BY MATERIAL*)

APP Key	MRC	Mode Code	Requirements
ALL*			
	ZZZX	G	DEPARTURE FROM CITED DESIGNATOR

Definition: THE VARIATION WHEN THE ITEM IS IN CONFORMITY WITH A TYPE DESIGNATOR COVERED BY A SPECIFICATION OR STANDARD, EXCEPT IN REGARD TO ONE OR MORE TECHNICAL DIFFERENTIATING CHARACTERISTICS.

Reply Instructions: Enter the reply in clear text. (e.g., ZZZXGAS MODIFIED BY MATERIAL*)

ALL*

ZZZY	G	REFERENCE NUMBER DIFFERENTIATING CHARACTERISTICS

Definition: A FEATURE OF THE ITEM OF SUPPLY WHICH MUST BE SPECIFICALLY RECORDED WHEN THE REFERENCE NUMBER COVERS A RANGE OF ITEMS.

Reply Instructions: Enter the reply in clear text. (e.g., ZZZYGCOLOR CODED LEADS*; ZZZYGAS DIFFERENTIATED BY MATERIAL*)

ALL*

CRTL	A	CRITICALITY CODE JUSTIFICATION

Definition: THE MASTER REQUIREMENT CODES OF THOSE REQUIREMENTS WHICH ARE TECHNICALLY CRITICAL BY REASON OF TOLERANCE, FIT, PERFORMANCE, OR OTHER CHARACTERISTICS WHICH AFFECT IDENTIFICATION OF THE ITEM.

Reply Instructions: Enter the Master Requirement Code for the requirement, the reply to which renders the item as being critical. (e.g., CRTLAMATL*; CRTLAMATL$$ASURF*)

Reply to this requirement only if the header record for the item identification for the item being identified has been coded as critical.

NOTE FOR MRC PRPY: IF DOCUMENT AVAILABILITY CODE B, D, F, OR H, REPLY TO MRC PRPY.

ALL* (See Note Above)

APP Key	MRC	Mode Code	Requirements
	PRPY	A	PROPRIETARY CHARACTERISTICS

Definition: IDENTIFICATION OF THOSE CHARACTERISTICS INCLUDED IN THE DESCRIPTION FOR WHICH A NON-GOVERNMENT ACTIVITY HAS IDENTIFIED ALL OR SELECTED CHARACTERISTICS OF THE ITEM AS BEING PROPRIETARY AND THEREFORE RESTRICTED FROM RELEASE OUTSIDE THE GOVERNMENT WITHOUT PRIOR PERMISSION OF THE ORIGINATOR OF THE DATA.

Reply Instructions: Enter the MRC codes of the individual characteristics of the description which are marked proprietary on the technical data, using AND coding ($$) for multiple characteristics. If all the MRCs are proprietary, enter the reply PACS. If none of the MRCs is proprietary, enter the reply NPAC. (e.g., PRPYAPACS*; PRPYANPAC*; PRPYAMATL$$ASURF*)

ALL*

	ELRN	G	EXTRA LONG REFERENCE NUMBER

Definition: A REFERENCE NUMBER EXCEEDING 32 POSITIONS.

Reply Instructions: Enter the entire reference number. Do not include the 5-position Commercial and Government Entity (CAGE) Code unless there is more than one extra long reference number on the NSN, (e.g., ELRNGANN112036BIL060557LEN313605UZ62365*).

If there is more than one extra long reference number on the NSN, include the CAGE or NCAGE and separate each reference by using the "&" character, (e.g., 28480 ANN112036BIL060557LEN313605UZ62365 & S1234 NN112036BIL060557LEN313605UZ62365).

In determining quantity of characters in the reference number, count will be made after modification in accordance with Volume 2, Chapter 9, FLIS Procedures Manual, DoD 4100.39-M.

ALL*

	ELCD	D	EXTRA LONG CHARACTERISTIC DESCRIPTION

Definition: A DESCRIPTION THAT EXCEEDS 5000 CHARACTERS.

Reply Instructions: Enter the Reply Code from the table below. (e.g., ELCDDA*)

REPLY CODE	REPLY (AN58)

APP Key	MRC	Mode Code	Requirements
		A	ADDITIONAL DESCRIPTIVE DATA ON MANUAL RECORD

SECTION: SUPPTECH

APP Key	MRC	Mode Code	Requirements
ALL			
	SUPP	G	SUPPLEMENTARY FEATURES

Definition: CHARACTERISTICS OR QUALITIES OF AN ITEM, NOT COVERED IN ANY OTHER REQUIREMENT, WHICH ARE CONSIDERED ESSENTIAL INFORMATION FOR ONE OR MORE FUNCTIONS EXCLUDING NSN ASSIGNMENT.

Reply Instructions: Enter the reply in clear text. (e.g., SUPPGMAY INCL HOLE IN UPPER SUPPORT FOR MTG DURING SHIPMENT*)

ALL

ZZZP J PURCHASE DESCRIPTION IDENTIFICATION

Definition: THE CONTROLLING ACTIVITY AND IDENTIFICATION OF A DOCUMENT USED IN LIEU OF A SPECIFICATION IN THE PROCUREMENT OF AN ITEM OF SUPPLY.

Reply Instructions: Enter the 5-position Commercial and Government Entity (CAGE) Code, followed by a dash and the identifying number of the document.

(e.g., ZZZPJ81337-30624A*)

ALL

FCLS A FUNCTIONAL CLASSIFICATION

Definition: THE ALPHA-NUMERIC DESIGNATION THAT IDENTIFIES THE CLASSIFICATION OF THE ITEM ACCORDING TO THE CATEGORY OF FUNCTIONS PERFORMED.

Reply Instructions: Enter the reply from the applicable document. (e.g., FCLSAHH-1.5*)

ALL

FTLD G FUNCTIONAL DESCRIPTION

Definition: DESCRIBES THE CAPABILITIES, INTENDED USE, AND/OR PURPOSE FOR WHICH THE ITEM IS PROVIDED.

APP Key	MRC	Mode Code	Requirements
	Reply Instructions: Enter description of function as concisely as possible. (e.g., FTLDGUSED TO INSTALL/REMOVE ENGINE NACELLE*)		
ALL			
	TMDN	A	TYPE/MODEL DESIGNATION
	Definition: THE ALPHA-NUMERIC-ALPHA DESIGNATION USED TO IDENTIFY THE TYPE AND/OR MODEL OF THE BASIC ITEM.		
	Reply Instructions: Enter the appropriate designation data. (e.g., TMDNAMSV-615/M*)		
ALL			
	RTSE	G	RELATIONSHIP TO SIMILAR EQUIPMENT
	Definition: INDICATES THE RELATIONSHIP, SUCH AS CONSTRUCTION, CAPABILITIES, AND THE LIKE, OF THE ITEM TO A SIMILAR ITEM.		
	Reply Instructions: Enter concise statement for similar item including name and identifying data. (e.g., RTSEGSIMILAR TO LOCKHEED OVERWING ENGINE HOIST P/N 61521-58*)		
ALL			
	RDAL	G	REFERENCE DATA AND LITERATURE
	Definition: LITERATURE AND REFERENCES AVAILABLE FOR INFORMATION PERTAINING TO THE ITEM.		
	Reply Instructions: Enter data appropriate and in a concise manner to identify informational references covering the item. (e.g., RDALGNAAVAIROIA/VFK58 A-2.2.9*)		
ALL			
	NTRD	A	ENTRY DATE
	Definition: INDICATES THE DATE THE ITEM WAS ENTERED INTO MIL-HDBK-300.		
	Reply Instructions: Enter the date structured in three hyphenated 2 position segments to indicate the last 2 digits of the calendar year, month, and day. (e.g., NTRDA80-05-28*)		

APP Key	MRC	Mode Code	Requirements
ALL			
	ZZZV	G	FSC APPLICATION DATA

Definition: THE JUSTIFICATION FOR THE ASSIGNMENT OF A FEDERAL SUPPLY CLASS (FSC) TO AN ITEM BASED ON THE CLASSIFICATION OF THE NEXT HIGHER CLASSIFIABLE ASSEMBLY.

Reply Instructions: Enter the name of the next higher classifiable assembly in clear text. (e.g., ZZZVGFUEL SYSTEM, GASOLINE ENGINE, NONAIRCRAFT*)

ALL			
	CZHT	A	RELATED GASES/CYLINDERS NATIONAL STOCK NUMBER

Definition: THE NATIONAL STOCK NUMBER DESIGNATION OF FILLED OR RELATED GASES OR CYLINDERS IN THE SUPPLY SYSTEM.

Reply Instructions: Enter the NSN. (e.g., CZHTA6830-00-000-0000*; CZHTA6830-00-000-0000$$A6830-01-000-0000*)

ALL			
	CXCY	G	PART NAME ASSIGNED BY CONTROLLING AGENCY

Definition: THE NAME ASSIGNED TO THE ITEM BY THE GOVERNMENT AGENCY OR COMMERCIAL ORGANIZATION CONTROLLING THE DESIGN OF THE ITEM.

Reply Instructions: Enter the reply in clear text. (e.g., CXCYGLINE PROCESSOR CONTROL BOARD*)

[Blank Page]

Reply Tables

Table 1 - MATERIALS 58
Table 2 - SURFACE TREATMENTS 58
Table 3 - GAS TYPES 58
Table 4 - THREAD SERIES 60
Table 5 - NONDEFINITIVE SPEC/STD DATA 60
Table 6 - COLORS 62

Table 1 - MATERIALS

MATERIALS

REPLY CODE	REPLY (AD09)
ALC000	ALUMINUM
A	ANY ACCEPTABLE
BR0000	BRASS
BR0041	BRASS, QQ-B-626, COMP 22, 1/2H
BN0000	BRONZE
ST0000	STEEL
STD000	STEEL, STAINLESS

Table 2 - SURFACE TREATMENTS

SURFACE TREATMENTS

REPLY CODE	REPLY (AD09)
AN0000	ANODIZED
A	ANY ACCEPTABLE
CRA000	CHROMIUM PLATED
NFG000	NICKEL PLATED
ZNS000	ZINC COATED

Table 3 - GAS TYPES

GAS TYPES

REPLY CODE	REPLY (AB75)
AA	ACETYLENE
DU	AEROSOL INSECTICIDE
AB	AIR
	Air (Breathing - Diving) (use Reply Code AB)
	Air (Breathing - Fire Fighting) (use Reply Code AB)
	Air (Breathing - Oil Free) (use Reply Code AB)
	Air, Compressed (use Reply Code AB)
	Air, Dry (use Reply Code AB)
	Air (Industrial - Oil Tolerant) (use Reply Code AB)
	Air (oil pumped) (use Reply Code AB)
	Air (water pumped) (use Reply Code AB)
AF	AMMONIA
A	ANY ACCEPTABLE
HB	ARGON-OXYGEN
AJ	ARGON (water pumped)
AK	BROMOCHLOROMETHANE
AGU	BROMOTRIFLUOROMETHANE
AR	BUTANE
HC	BUTANE PROPANE MIXTURE

REPLY CODE	REPLY (AB75)
AS	CARBON DIOXIDE
DW	CARBON MONOXIDE
AV	CHLORINE
HE	CHLORINE TRIFLUORIDE
HD	CHLOROFLUOROHYDROCARBON
AAU	CHLOROTETRAFLUOROETHANE
HK	COMPRESSED GAS
FL	CYCLOPROPANE
EA	DICHLORODIFLUOROMETHANE
HF	DICHLOROTETRAFLUOROETHANE
AAV	DICHLOROTRIFLUOROETHANE
HH	DIFLUOROETHANE
HG	DISPERSANT DICHLORODIFLUOROMETHANE
ED	ETHYLENE OXIDE
HJ	FUMIGANT, CARBON DIOXIDE-ETHYLENE OXIDE
HL	HALOGEN
BL	HELIUM
	Helium (oil free) (use Reply Code BL)
	Helium (oil pumped) (use Reply Code BL)
EE	HELIUM-OXYGEN MIXTURE
	Helium (water pumped) (use Reply Code BL)
BT	HYDROGEN
HM	HYDROGEN SULFIDE
CB	LIQUEFIED GAS
EF	MEHTYL CHLORIDE, GAS
HN	METHYL BROMIDE
HP	MONOCHLORODIFLUOROMETHANE
CG	NITROGEN
HQ	NITROGEN, DRY
	Nitrogen (oil free) (use Reply Code CG)
	Nitrogen (oil pumped) (use Reply Code CG)
DR	NITROGEN-OXYGEN
	Nitrogen (water pumped) (use Reply Code CG)
AKJ	NITROUS OXIDE
HR	NUCLEAR COUNTER GAS MIXTURE
HS	OIL, MIL-O-5606
CM	OXYGEN
	Oxygen (aviators) (use Reply Code CM)
	Oxygen (industrial) (use Reply Code CM)
	Oxygen (medical) (use Reply Code CM)
	Oxygen (technical) (use Reply Code CM)
HT	PETROLEUM (liquefied)
	Petroleum (nonliquefied) (use Reply Code HT)
EM	PROPANE, LIQUID
ABU	REFRIGERANT GAS MIXTURE
CW	REFRIGERANT 114
FW	REFRIGERANTS
DD	SULPHUR DIOXIDE, GASEOUS

REPLY CODE	REPLY (AB75)
ET	SULPHUR HEXAFLUORIDE

Table 4 - THREAD SERIES

THREAD SERIES

REPLY CODE	REPLY (AH06)
AS	AMERICAN STANDARD
AN	ANPT
AD	INTERNATIONAL SPECIAL
AR	INTERNATIONAL STANDARD
AE	IPS
SM	ISO M
SS	ISO S
GT	NGT
AF	NGTD
AH	NGTI
AJ	NGTP
NG	NG0
NN	NONSTANDARD
SC	NPSC
AK	NPSN
NP	NPT
AL	NPTA
NT	NPTF
AQ	NS
AT	TWPP
UN	UN
NC	UNC
NE	UNEF
NF	UNF
NJ	UNJ
JC	UNJC
JE	UNJEF
JF	UNJF

Table 5 - NONDEFINITIVE SPEC/STD DATA

NONDEFINITIVE SPEC/STD DATA

REPLY CODE	REPLY (AD08)
AL	ALLOY
AN	ANNEX
AP	APPENDIX
AC	APPLICABILITY CLASS
AR	ARRANGEMENT
AS	ASSEMBLY
AB	ASSORTMENT

REPLY CODE	REPLY (AD08)
BX	BOX
CY	CAPACITY
CA	CASE
CT	CATEGORY
CL	CLASS
CE	CODE
CR	COLOR
CC	COMBINATION CODE
CN	COMPONENT
CP	COMPOSITION
CM	COMPOUND
CD	CONDITION
CS	CONSTRUCTION
DE	DESIGN
DG	DESIGNATOR
DW	DRAWING NUMBER
EG	EDGE
EN	END
FY	FAMILY
FG	FIGURE
FN	FINISH
FM	FORM
FA	FORMULA
GR	GRADE
GP	GROUP
BA	IMAGE COLOR
NS	INSERT
TM	ITEM
KD	KIND
KT	KIT
LG	LENGTH
LT	LIMIT
MK	MARK
AA	MARKER
ML	MATERIAL
BB	MAXIMUM DENSITY
MH	MESH
ME	METHOD
BC	MINIMUM DENSITY
MD	MODEL
MT	MOUNTING
NR	NUMBER
PT	PART
PN	PATTERN
PC	PHYSICAL CONDITION
PS	PIECE
PL	PLAN
PR	POINT

REPLY CODE	REPLY (AD08)
QA	QUALITY
RN	RANGE
RT	RATING
RF	REFERENCE NUMBER
SC	SCHEDULE
SB	SECTION
SL	SELECTION
SE	SERIES
SV	SERVICE
SX	SET
SA	SHADE
SH	SHAPE
SG	SHEET
SZ	SIZE
PZ	SPECIES
SQ	SPECIFICATION SHEET
SD	SPEED
ST	STYLE
SS	SUBCLASS
SF	SUBFORM
SP	SUBTYPE
SN	SURFACE CONDITION
SY	SYMBOL
SM	SYSTEM
TB	TABLE
TN	TANNAGE
TP	TEMPER
TX	TEXTURE
TK	THICKNESS
TT	TREATMENT
TR	TRIM
TY	TYPE
YN	UNIT
VA	VARIETY
WT	WEIGHT
WD	WIDTH

Table 6 - COLORS

COLORS

REPLY CODE	REPLY (AD06)
AL0000	ALUMINUM
A	ANY ACCEPTABLE
BL0000	BLACK
BU0000	BLUE
BR0000	BROWN
MS0013	BUFF

REPLY CODE	REPLY (AD06)
GY0000	GRAY
GR0000	GREEN
RG0000	ORANGE
RE0000	RED
WH0000	WHITE
YE0000	YELLOW

Reference Drawing Groups

REFERENCE DRAWING GROUP A 65
REFERENCE DRAWING GROUP C 74

REFERENCE DRAWING GROUP A

END CONNECTION STYLES

THREADED INTERNAL

(No Requirements)

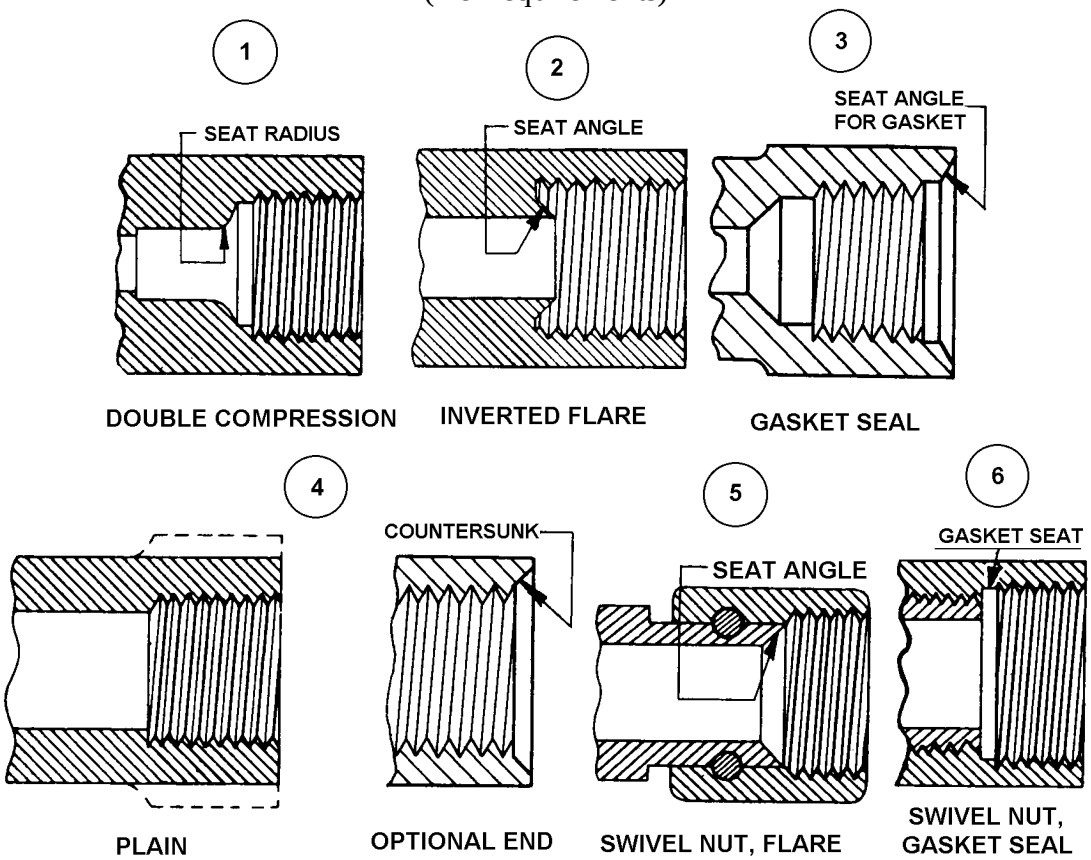

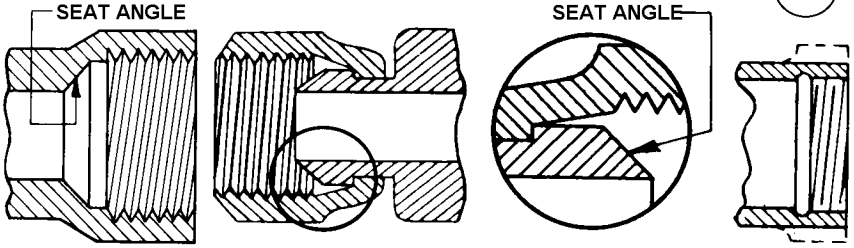

FLARE

SWIVEL NUT, INVERTED FLARE

DRAINAGE

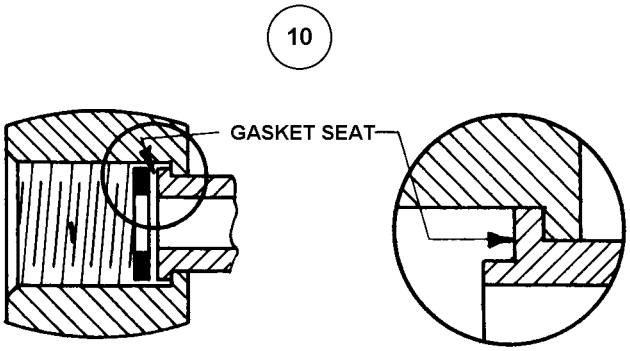

SWIVEL NUT, GASKET SEAL

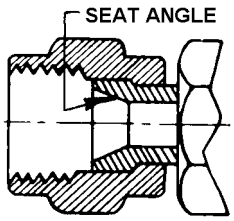

SWIVEL NUT, FLARED

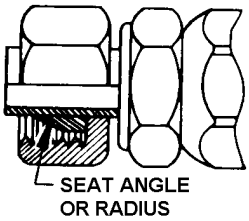

SWIVEL NUT W/COMPRESSION SLEEVE

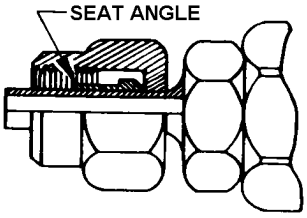

SWIVEL NUT W/LOOSE OR INTEGRAL CLINCH SLEEVE

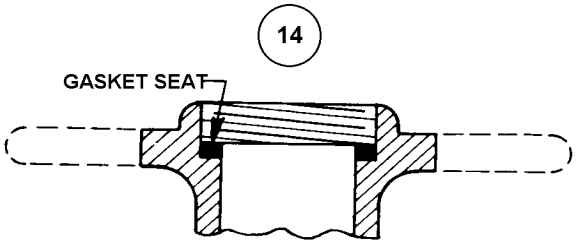

GASKET SEAL

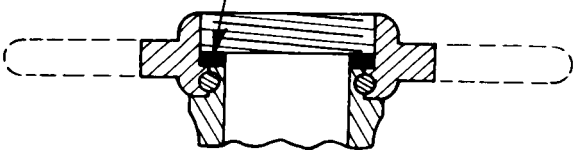

SWIVEL NUT, GASKET SEAL

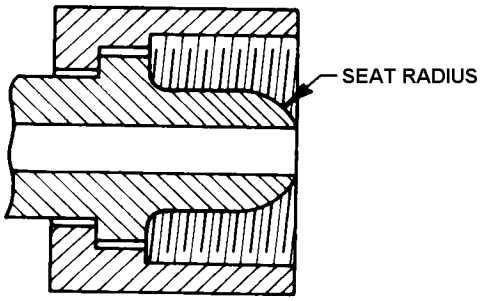

SWIVEL NUT, GAS

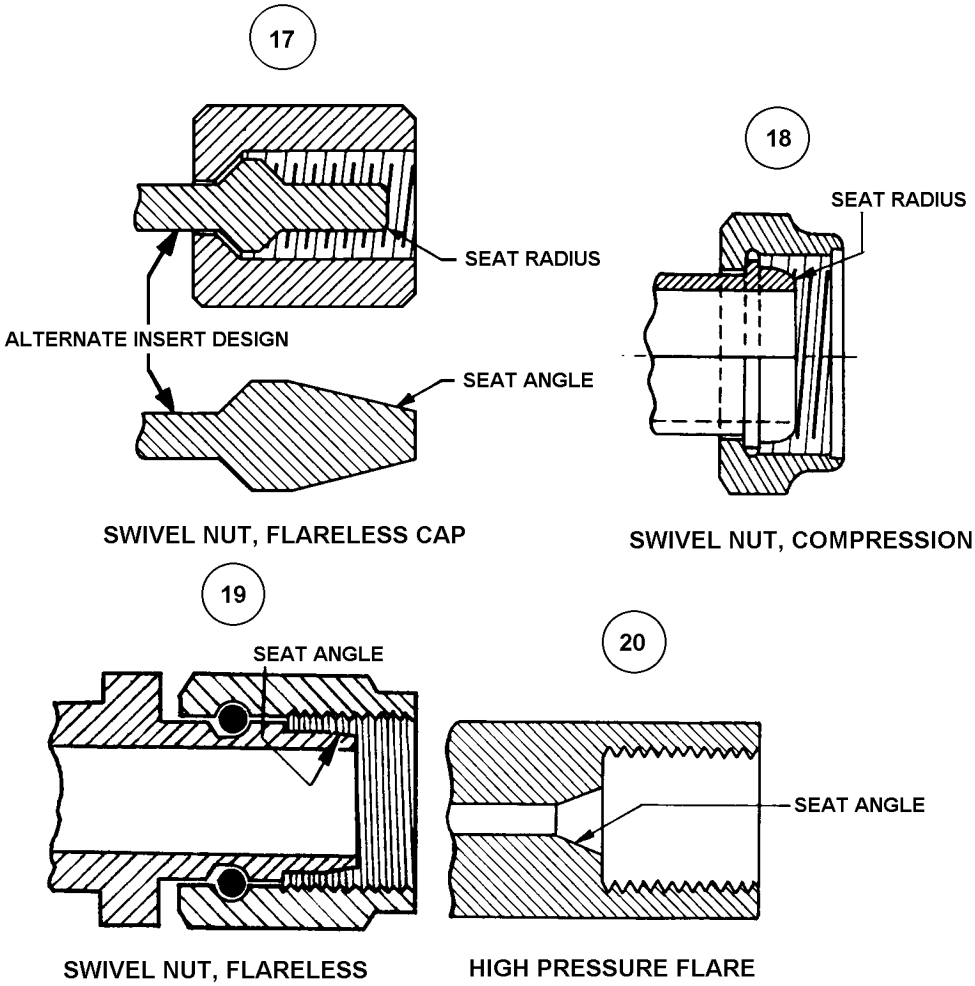

END CONNECTION STYLES

UNTHREADED INTERNAL

(No Requirements)

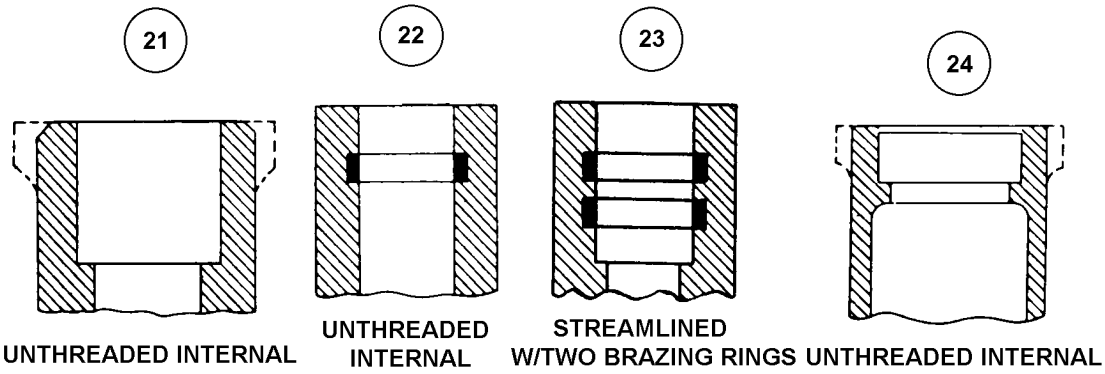

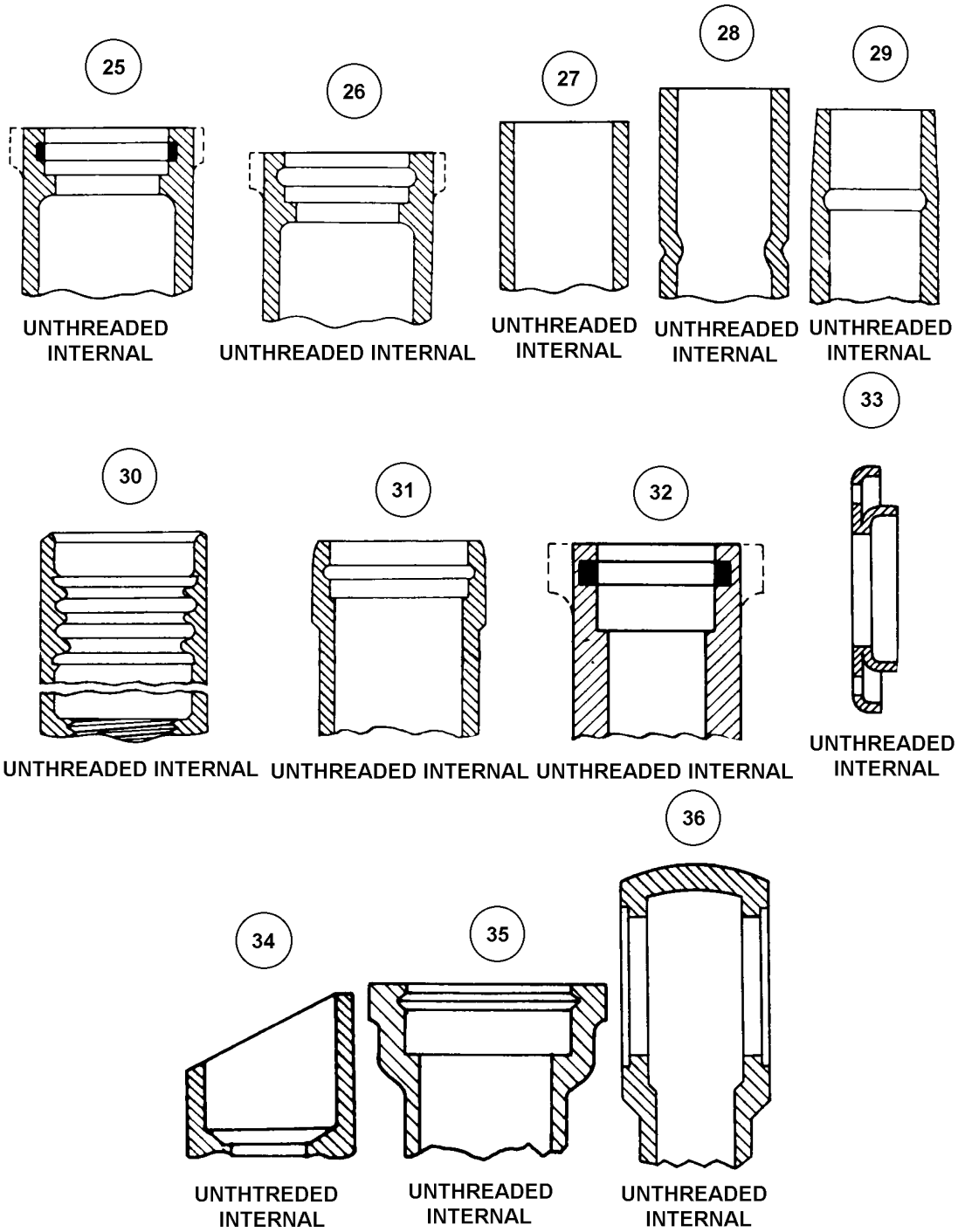

END CONNECTION STYLES

THREADED EXTERNAL

(No Requirements)

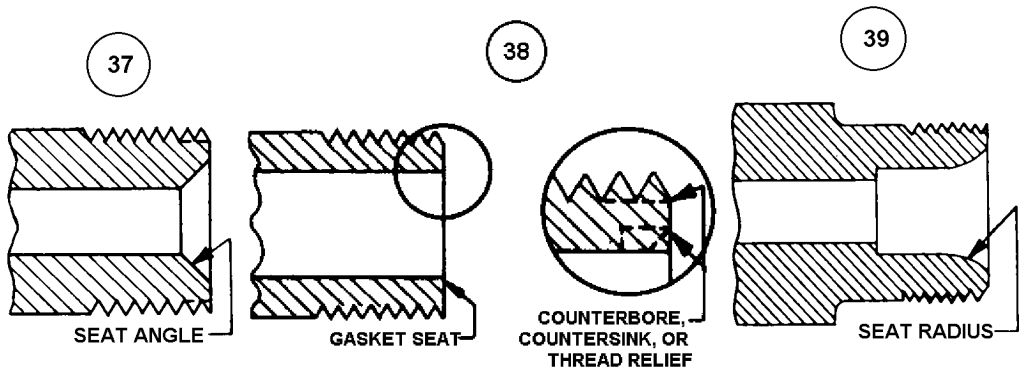
37
38
39
SEAT ANGLE
GASKET SEAT
COUNTERBORE, COUNTERSINK, OR THREAD RELIEF
SEAT RADIUS
INVERTED FLARE
PLAIN
COMPRESSION

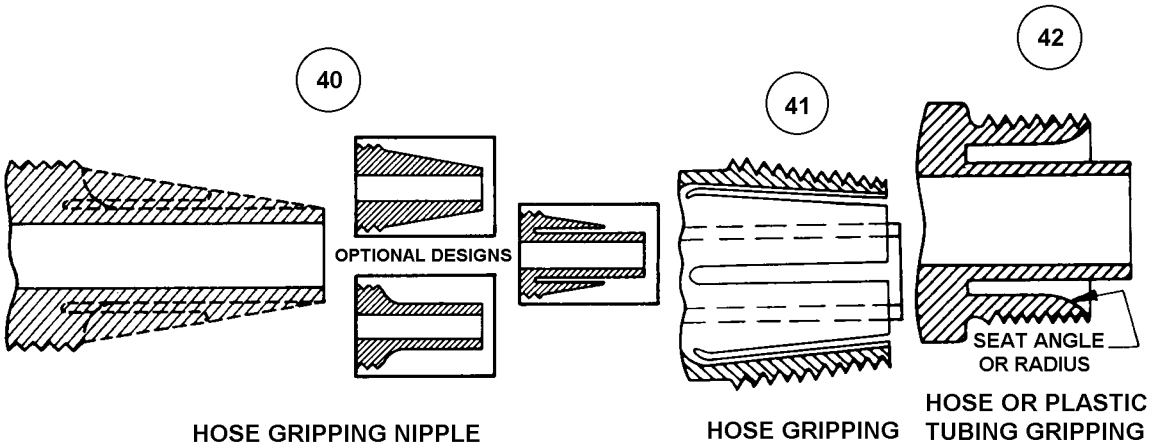
40
41
42
OPTIONAL DESIGNS
SEAT ANGLE OR RADIUS
HOSE GRIPPING NIPPLE
HOSE GRIPPING
HOSE OR PLASTIC TUBING GRIPPING

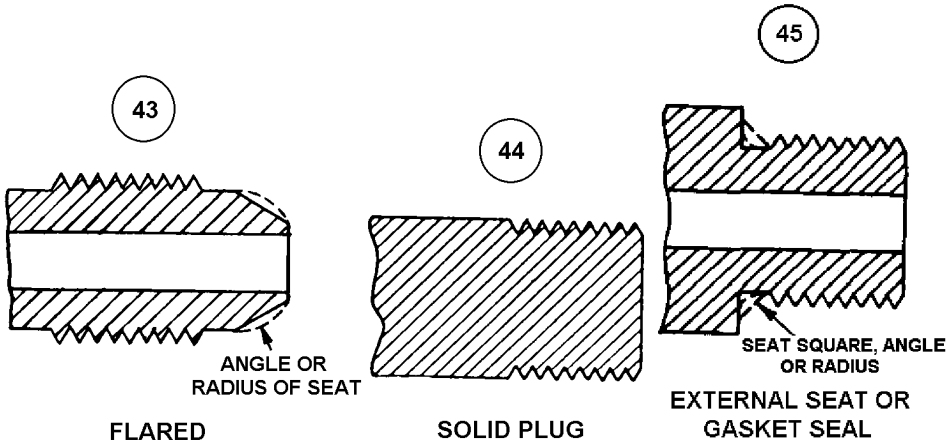
43
44
45
ANGLE OR RADIUS OF SEAT
SEAT SQUARE, ANGLE OR RADIUS
FLARED
SOLID PLUG
EXTERNAL SEAT OR GASKET SEAL

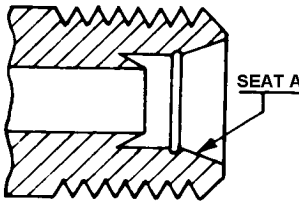

FLARELESS

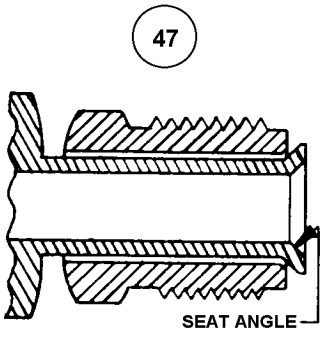

SWIVEL NUT INVERTED FLARE

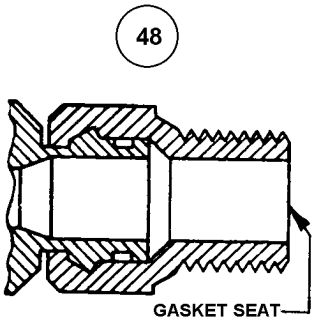

SWIVEL, PLAIN

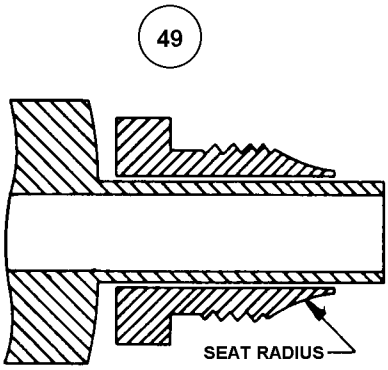

SWIVEL NUT DOUBLE COMPRESSION

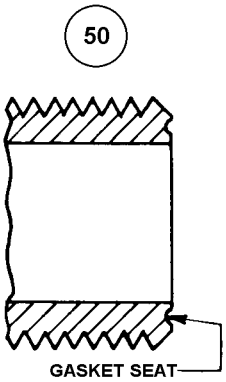

GASKET SEAL

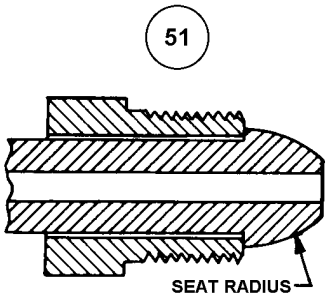

SWIVEL NUT, FLARED

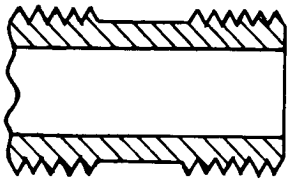

DOUBLE THREADED SECTION
BOSS FITTING GASKET
W/ LOCK NUT SEALING

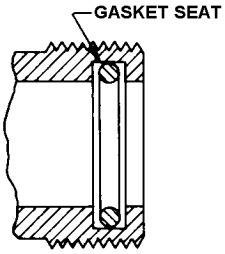

GASKET SEAL COMPRESSION

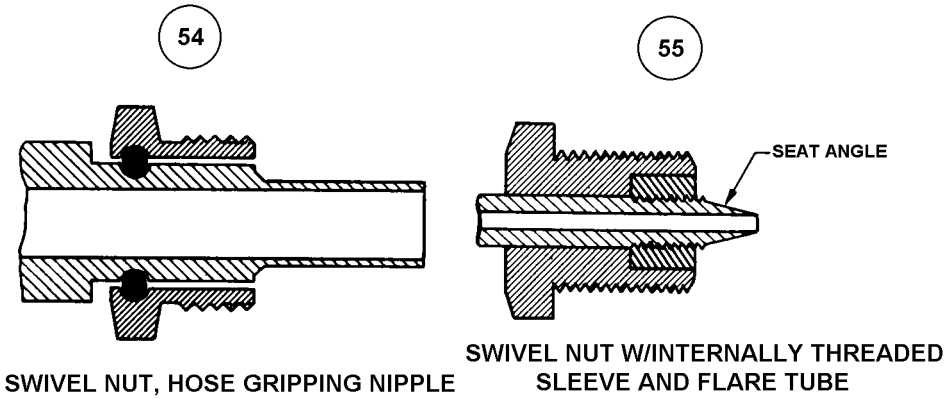

END CONNECTION STYLES

UNTHREADED EXTERNAL

(No Requirements)

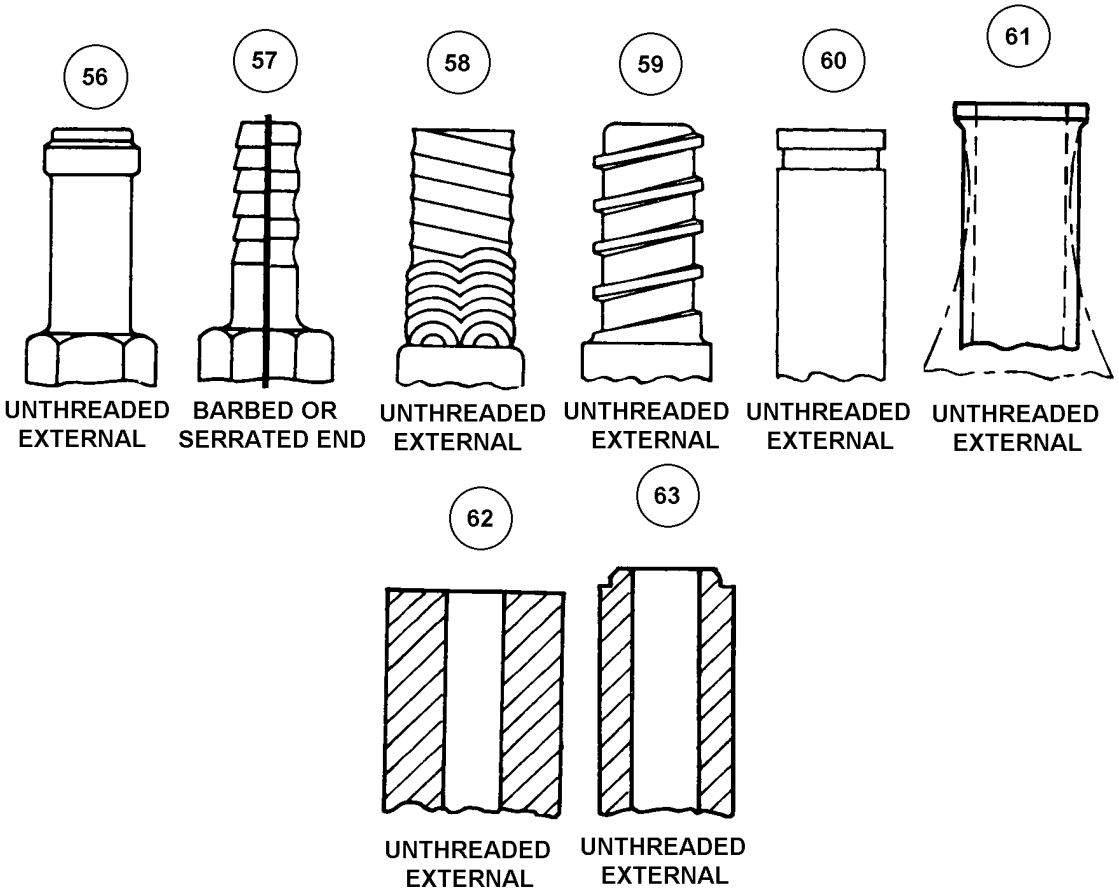

END CONNECTION STYLES

THREADED INTERNAL AND EXTERNAL

(No Requirements)

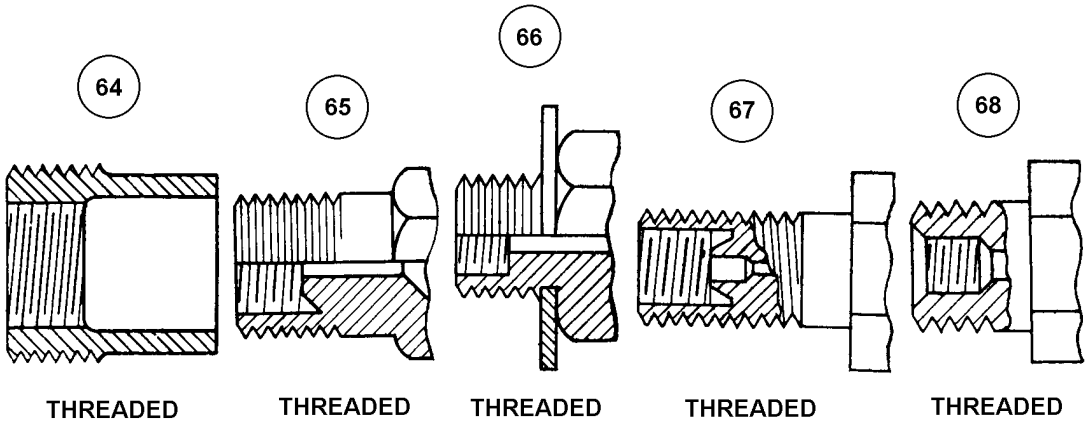

END CONNECTION STYLES

FLANGED

(No Requirements)

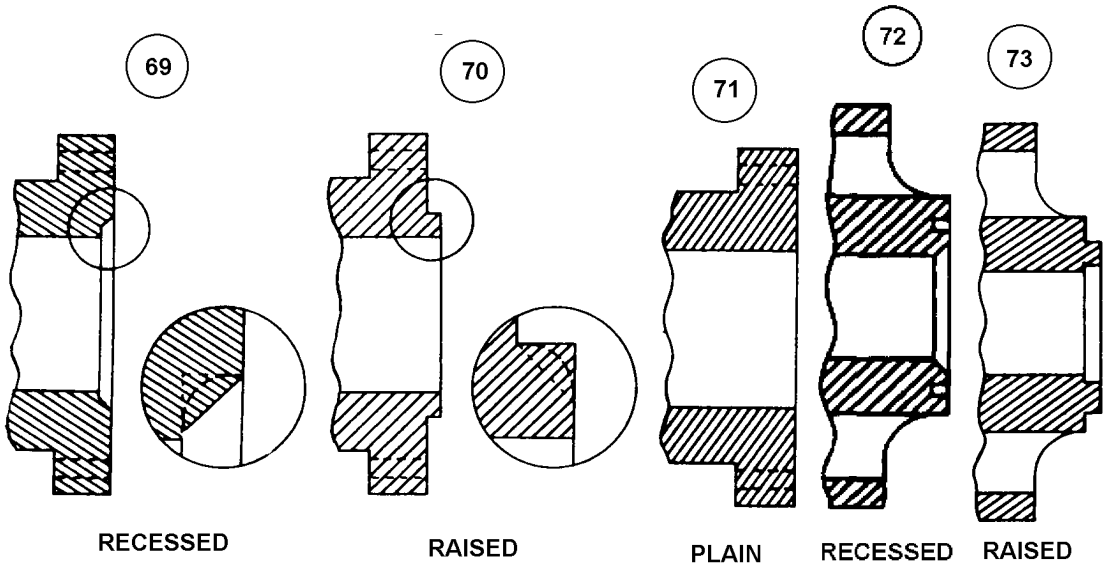

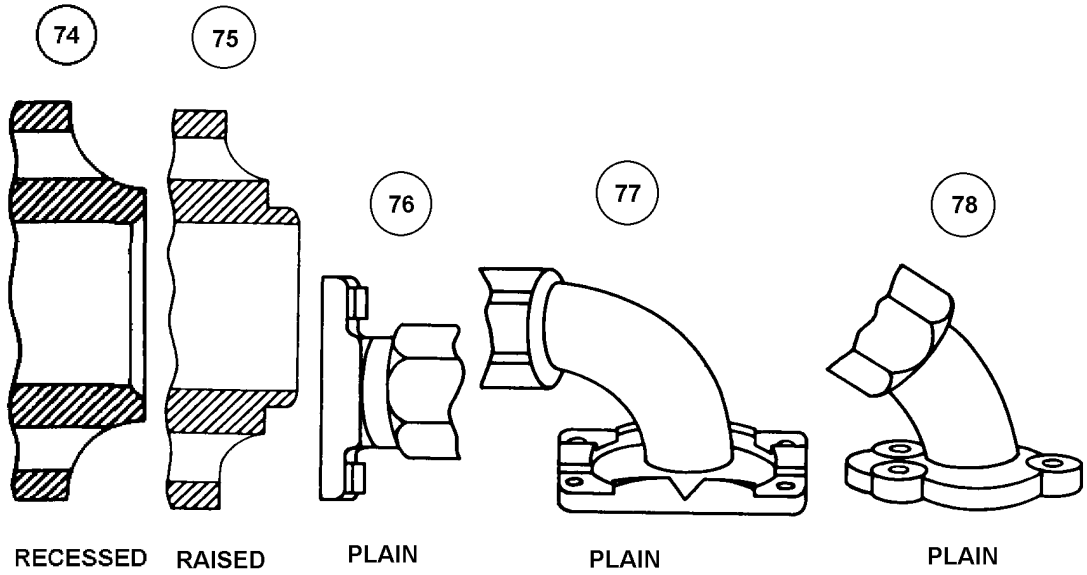

END CONNECTION STYLES

BUTT WELD

(No Requirements)

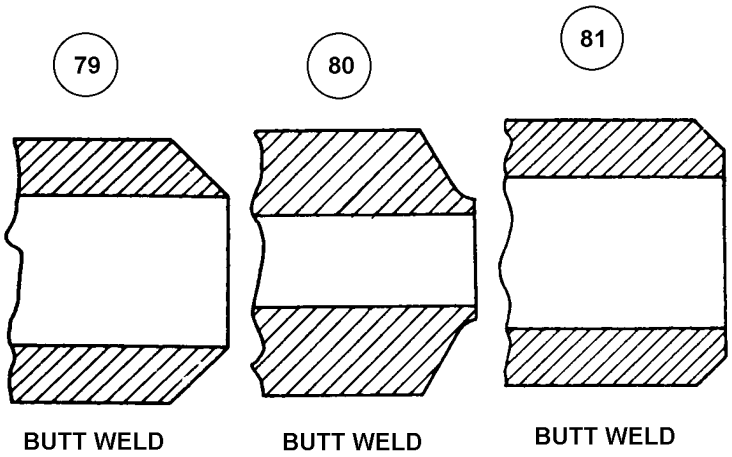

REFERENCE DRAWING GROUP C

CYLINDER STYLES

(No Requirements)

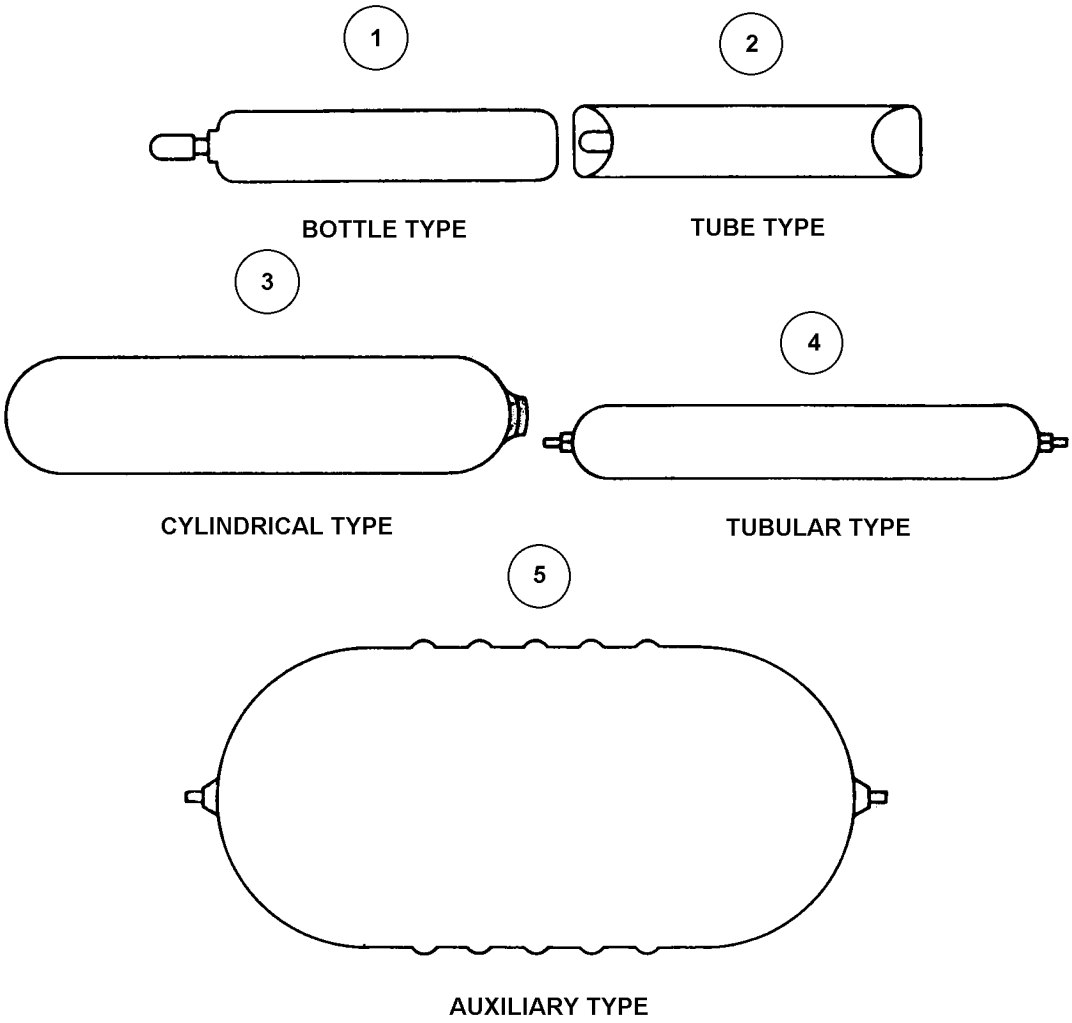

Technical Data Tables

COMPRESSED GAS CYLINDER COLOR CODES AND CAPACITY DATA..... 76

COMPRESSED GAS CYLINDER COLOR CODES AND CAPACITY DATA

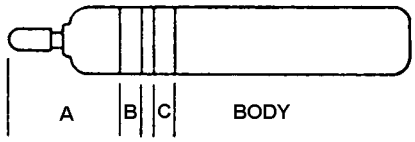

BOTTLE STYLE

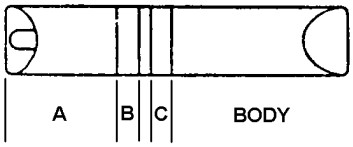

TUBE STYLE

TYPE OF GAS	COLOR MARKINGS	BASIS OF CAPACITY			
A	B	C	BODY		
Acetylene	Yellow	Yellow	Yellow	Yellow	Cubic feet per cylinder
Acrolein	Yellow	Brown	Black	Brown	Gallons per cylinder
Aerosol insecticide	Buff	Buff	Buff	Buff	Pounds per cylinder
Air (oil tolerant)	Black	Green	Green	Black	Cubic feet per cylinder
Air (oil free)	Black	Green	Black	Black	Cubic feet per cylinder
Air (Breathing-Diving)	White	White	White	White	Cubic feet per cylinder
Air (Breathing-Fire Fighting)	Yellow	Yellow	Yellow	Yellow	Cubic feet per cylinder
Ammonia	Brown	Yellow	Orange	Orange	Pounds per cylinder
Argon-oxygen	Gray	Green	Gray	Gray	Cubic

TYPE OF GAS	COLOR MARKINGS	BASIS OF CAPACITY			
A	B	C	BODY		
					feet per cylinder
Argon (water pumped)	Gray	White	Gray	Gray	Cubic feet per cylinder
Boron trichloride	Gray	Brown	Gray	Brown	Pounds per cylinder
Boron trifluoride	Gray	Brown	Brown	Brown	Pounds per cylinder
Bromoacetone	Brown	Black	Black	Brown	Pounds per cylinder
Bromochloromethane	Buff	Gray	Buff	Buff	Pounds per cylinder
Bromochloromethane (fire extinguisher)	Red	Gray	Red	Red	Pounds per cylinder
Bromotrifluoromethane	Orange	White	Gray	Orange	Pounds per cylinder
Bromotrifluoromethane (fire extinguisher)	Red	White	Gray	Red	Pounds per cylinder
Butadiene	Yellow	White	Buff	Buff	Pounds per cylinder
Carbon dioxide	Gray	Gray	Gray	Gray	Pounds per cylinder
Carbon dioxide (fire extinguisher)	Red	Red	Red	Red	Pounds per cylinder
Carbon monoxide	Yellow	Brown	Brown	Brown	Cubic feet per cylinder
Chloroacetone	Black	Brown	Black	Brown	Pounds per cylinder
Chlorine	Brown	Brown	Brown	Brown	Pounds

TYPE OF GAS	COLOR MARKINGS	BASIS OF CAPACITY			
A	B	C	BODY		
					per cylinder
Chlorine trifluoride	Brown	Green	Brown	Brown	Pounds per cylinder
Chloropicrin	Brown	Orange	Orange	Brown	Pounds per cylinder
Cyanogen	Yellow	Brown	Yellow	Brown	Pounds per cylinder
Cyclopropane (industrial)	Yellow	Orange	Yellow	Yellow	Cubic feet per cylinder
Cyclopropane (medical)	Orange	Yellow	Blue	Blue	Cubic feet per cylinder
Cyclopropane (medical)	Orange	.....Chromium Plated.....	Cubic feet per cylinder		
Dibromodifluoromethane	Buff	White	Buff	Buff	Pounds per cylinder
Dibromodifluoromethane (fire only)	Red	White	Red	Red	Pounds per cylinder
Dichlorodifluorometh-and (refrigerant No. 12)	Orange	Orange	Orange	Orange	Pounds per cylinder
Dichloromonofluoromethane (refrigerant No. 21)	Orange	Orange	Orange	Orange	Pounds per cylinder
Dichlorotetrafluoroethane (refrigerant No. 114)	Orange	Orange	Orange	Orange	Pounds per cylinder
Difluorochloroethane	Gray	Yellow	Yellow	Orange	Pounds per cylinder
Difluoroethane	Gray	Yellow	Orange	Orange	Pounds per cylinder
Dimethylamine (anhydrous)	Yellow	Blue	White	Buff	Pounds

TYPE OF GAS	COLOR MARKINGS	BASIS OF CAPACITY			
A	B	C	BODY		
					per cylinder
Dimethylether	Yellow	Brown	Buff	Buff	Pounds per cylinder
Dispersant, Dichlorodifluoromethane-Difluoroethane mix	Buff	Gray	Gray	Buff	Pounds per cylinder
Ethane	Yellow	Blue	Yellow	Yellow	Pounds per cylinder
Ethyl chloride	Buff	Blue	Yellow	Buff	Pounds per cylinder
Ethyl nitrite	Yellow	Buff	Buff	Buff	Gallons per cylinder
Ethylamine (anhydrous)	Yellow	Blue	Blue	Buff	Pounds per cylinder
Ethylene (industrial)	Blue	Yellow	Buff	Buff	Pounds per cylinder
Ethylene (medical)	Yellow	Blue	Blue	Blue	Pounds per cylinder
Ethylene oxide	Yellow	Blue	Buff	Buff	Pounds per cylinder
Fluorine	Brown	Green	Green	Brown	Pounds per cylinder
Fumigant, Carbon dioxide-Ethylene oxide	Buff	Blue	Buff	Buff	Pounds per cylinder
Helium (oil free or medical)	Buff	Gray	Gray	Gray	Cubic feet per cylinder
Helium (oil pumped)	Gray	Orange	Gray	Gray	Cubic feet per cylinder
Helium-Oxygen	Buff	White	Green	Green	Cubic

TYPE OF GAS	COLOR MARKINGS	BASIS OF CAPACITY			
A	B	C	BODY		
					feet per cylinder
Hydrogen	Yellow	Black	Yellow	Yellow	Cubic feet per cylinder
Hydrogen bromide	Black	Brown	Brown	Brown	Pounds per cylinder
Hydrogen chloride (anhydrous)	Brown	White	Brown	Brown	Cubic feet per cylinder
Hydrogen cyanide (anhydrous)	Yellow	Brown	White	Brown	Pounds per cylinder
Hydrogen fluoride (anhydrous)	Green	Brown	Brown	Brown	Pounds per cylinder
Hydrogen sulfide	Brown	Yellow	Brown	Brown	Cubic feet per cylinder
Krypton (oil pumped)	Gray	Buff	Buff	Gray	Cubic feet per cylinder
Krypton (water pumped)	Gray	Buff	Gray	Gray	Cubic feet per cylinder
Manufactured gases (Specify-coal, oil, water, producer, etc)	Brown	Yellow	Yellow	Yellow	Cubic feet per cylinder
Methane	Yellow	White	Yellow	Yellow	Cubic feet per cylinder
Methylamine	Yellow	Brown	Yellow	Buff	Pounds per cylinder
Methyl bromide	Brown	Black	Brown	Brown	Pounds per cylinder
Methyl bromide (fire extinguisher)	Red	Brown	Red	Red	Pounds per cylinder
Methyl chloride	Yellow	Brown	Orange	Orange	Pounds

TYPE OF GAS	COLOR MARKINGS	BASIS OF CAPACITY			
A	B	C	BODY		
					per cylinder
Methyl mercaptan	Brown	Yellow	Yellow	Brown	Pounds per cylinder
Methyl sulfide	Yellow	Brown	Buff	Brown	Pounds per cylinder
Methylene chloride	Gray	Blue	Orange	Orange	Gallons per cylinder
Monochlorodifluoromethane (refrigerant No. 22)	Orange	Orange	Orange	Orange	Pounds per cylinder
Monochlorotetrafluoroethane (refrigerant No. 124a)	Orange	Orange	Orange	Orange	Pounds per cylinder
Monochlorotrifluoromethane (refrigerant No. 13)	Orange	Orange	Orange	Orange	Pounds per cylinder
Natural gas	Yellow	Brown	Yellow	Yellow	Pounds per cylinder
Neon (oil pumped)	White	Buff	Gray	Gray	Cubic feet per cylinder
Neon (water pumped)	White	Buff	Buff	Gray	Cubic feet per cylinder
Nickel carbonyl	Yellow	White	Yellow	Brown	Cubic feet per cylinder
Nitric oxide	Brown	Buff	Brown	Brown	Cubic feet per cylinder
Nitrogen (dry pumped)	Gray	Black	Black	Black	Cubic feet per cylinder
Nitrogen (oil pumped)	Gray	Black	Gray	Gray	Cubic feet per cylinder
Nitrogen (water pumped)	Gray	Black	Black	Gray	Cubic

TYPE OF GAS	COLOR MARKINGS	BASIS OF CAPACITY			
A	B	C	BODY		
					feet per cylinder
Nitrogen dioxide	Brown	Buff	Buff	Brown	Pounds per cylinder
Nitrogen-oxygen	Black	White	Green	Green	Cubic feet per cylinder
Nitrosyl chloride	Brown	White	White	Brown	Pounds per cylinder
Nitrous oxide	Blue	Blue	Blue	Blue	Cubic feet per cylinder
Oxygen (aviator's)	Green	White	Green	Green	Cubic feet per cylinder
Oxygen (electrolytic)	Green	White	White	Green	Cubic feet per cylinder
Oxygen (industrial)	Green	Green	Green	Green	Cubic feet per cylinder
Oxygen (medical)	White	Green	Green	Green	Gallons per cylinder
Oxygen-Carbon dioxide	Gray	White	Green	Green	Cubic feet per cylinder
Petroleum (liquified) (Specify: Butane, Butane-Propane, Butene-1, Isobutane, Isobutylene, Neopentane, Propane, etc.)	Yellow	Orange	Yellow	Yellow	Pounds per cylinder
Phenylcarbylamine chloride	Brown	Gray	Gray	Brown	Pounds per cylinder
Phosgene	Brown	Orange	Brown	Brown	Cubic feet per cylinder
Propylene	Yellow	Gray	Buff	Buff	Pounds per

TYPE OF GAS	COLOR MARKINGS	BASIS OF CAPACITY			
A	B	C	BODY		
Sulfur dioxide	Brown	Gray	Brown	Brown	cylinder Pounds per cylinder
Sulfur hexafluoride	Gray	White	Black	Gray	Pounds per cylinder
Tetrafluoroethylene	Orange	Orange	Orange	Orange	Pounds per cylinder
Tetrafluoroethylene (inhibited)	Buff	White	White	Buff	Pounds per cylinder
Trichloromonofluoromethane (refrigerant No. 11)	Orange	Orange	Orange	Orange	Pounds per cylinder
Trichlorotrifluoroethane (refrigerant No. 1)	Orange	Orange	Orange	Orange	Pounds per cylinder
Trimethylamine (anhydrous)	Yellow	Blue	Orange	Buff	Pounds per cylinder
Vinyl bromide	Buff	Blue	Blue	Buff	Pounds per cylinder
Vinyl chloride	Yellow	Orange	Buff	Buff	Pounds per cylinder
Vinyl methyl ether (inhibited)	Yellow	Black	Buff	Buff	Pounds per cylinder
Xenon (oil pumped)	White	Black	Black	Gray	Cubic feet per cylinder
Xenon (water pumped)	White	Black	Gray	Gray	Cubic feet per cylinder
New cylinders suitable for: Compressed Air, Nitrogen-helium, Oxygen-hydrogen	No color markings……	Cubic feet per cylinder			

FIIG Change List

FIIG Change List, Effective August 6, 2010.

This change replaced with ISAC or and/or coding.