FEDERAL ITEM IDENTIFICATION GUIDE

ANODES

This Reprint replaces FIIG A252, July 2, 2010.

Commander

Defense Logistics Information Service

ATTN: DLIS-K

74 Washington Avenue North, Suite 7

Battle Creek, Michigan 49037-3084

(COMM) (269) 961-5779

(DSN) 661-5779

PUBLISHED BY DEFENSE LOGISTICS INFORMATION SERVICE, BATTLE CREEK, MI

This Federal Item Identification Guide for Supply Cataloging is issued under the authority of Department of Defense Instruction 5025.7.

The use of this publication is mandatory for US. Federal Activities participating in Federal Catalog System Operations.

BY ORDER OF THE DIRECTOR

/s/

Commander

Defense Logistics Information Service

Table of Contents

GENERAL INFORMATION 1
Index of Master Requirement Codes 5
INDEX OF APPROVED ITEM NAMES COVERED BY THIS FIIG 6
APPLICABILITY KEY INDEX 7
SECTION I 9
SECTION III 22
Reply Tables 26
Reference Drawing Groups 37
Technical Data Tables 54
FIIG Change List 85

GENERAL INFORMATION

1. Purpose and Scope

This Federal Item Identification Guide (FIIG) is a self-contained document for the collection, coding, transmittal, and retrieval of item characteristics and related supply management data for an item of supply for logistical use. This FIIG is to be used to describe items of supply identified by the index of approved item names appearing in this section.

2. Contents

This FIIG is comprised of the following:

Index of Approved Item Names Covered by this FIIG
Applicability Key Index
Section I - Item Characteristics Data Requirements
Section III - New text that should be here.
Appendix A - Reply Tables
Appendix B - Reference Drawing Groups (as applicable)
Appendix C - Technical Data Tables (as applicable)

a. Index of Approved Item Names Covered by this FIIG:

The index lists the approved item names with definitions and item name codes as they appear in Cataloging Handbook H6, applicable to this FIIG. In addition, each name entry is assigned an applicability key for use in relating the characteristics requirements in Section I to the specific item name.

b. Applicability Key Index:

The purpose of this index is to provide the user with a ready reference for determining the specific requirements which are applicable to a given approved item name. This index lists all requirements in sequence as they appear in the FIIG. The applicability of a Master Requirement Coded requirement is indicated by the column headed by the specific item name applicability key as follows:

(1) The letter "X" indicates the requirement must be answered for a full descriptive item.

(2) The letters "AR" indicate the requirement is to be answered as required by (1) instructional notes within the FIIG; (2) when the reply is predicated on replies to a related main requirement; or (3) when an asterisk (*) is used in conjunction with the applicability key column in Section I.

(3) A blank in the column indicates the requirement is not applicable to the specific item name.

c. Section I - Item Characteristics Data Requirements:

This section contains the physical and performance characteristics requirements needed to describe and identify an item of supply. These characteristics differentiate one item from all other items of supply and are to be used to meet the needs of all supported functions. This section is arranged in columns. Identification of each column and instructions pertinent thereto are as follows:

(1) Applicability Key:

The first column shows the applicability key(s) for each requirement. It indicates whether the requirement need be satisfied for the item being identified. "ALL" indicates that the requirement must be answered for all items covered by the FIIG. One or more alphabetic character(s) or group of one or more alphabetic characters indicates a response is required when describing items with an approved item name or names represented by the key(s). An asterisk (*) used in conjunction with any applicability key indicates that the characteristic stated in the requirement may not be applicable to all items covered by the FIIG.

(2) Master Requirement Codes (MRC):

A four-position code which is assigned to a FIIG requirement for identification of the requirement, cross-referencing requirements in the various sections and appendices of the FIIG, and for mechanized processing and retrieval of FIIG generated data. Absence of a MRC for a requirement indicates a lead-in to requirements with individual MRCs in Appendix B.

(a) The coding technique for providing MULTIPLE/OPTIONAL responses will not be used for a Section I requirement assigned Mode Code A or L that leads to Appendix B sketches with dimensional requirements.

(b) Identified Secondary Address Coding:

This technique is for extending the Master Requirement Code so that a unique address is provided for each application of the requirement in relation to the item and is authorized only as instructed within the requirement. Responses coded through this technique will always consist of the following: (1) Master Requirement Codes, (2) indicator code (a single numeric character determined by the number of positions contained), (3) identified secondary address code (1 to 3-digit alphabetic codes determined by the number of predicted replies), (4) the mode code, (5) the reply code and/or clear text response, and (6) end with a record separator (*). Steps (1) through (6) are repeated for each application of the requirement.

(c) AND/OR coding:

A technique for extending the Master Requirement Code to provide a distinctive address for multiple responses to the same requirement. Responses coded through this technique will always consist of (1) Master Requirement Code, (2) mode code, (3) the response or reply code (as instructed by the requirement), (4) a single dollar sign ($) for an OR condition, or a double dollar sign ($$) for an AND condition, (5) the mode code, (6) the response or reply code

(followed by conditions (4) through (6) for each of the multiple responses) and (7) end with a record separator (*). NOTE: Apply this technique only when instructed by the requirement sample reply (e.g.).

(3) Mode Code:

A one-position alphabetic code that specifies the manner in which a response will be prepared. Each requirement assigned a MRC is also assigned a mode code. Sample replies follow each FIIG requirement displaying the proper construction of a response for the assigned mode code. The response to a requirement will always be prepared in accordance with the assigned mode code and sample reply except in the following instances:

(a) Use of E Mode Code replies is not authorized. If a reply needed to describe an item is not listed in the applicable table, contact the FIIG Initiator.

(b) Mode Code K may not be used for any requirement unless instructed by the requirement instructions.

(4) Requirement:

This portion includes the characteristics data elements and data use identifiers required to identify and differentiate one item of supply from another, narrative definitions, and explanations as to use and method of expression. Instructions for coding and preparing replies are also provided.

(5) Reply Code:

A code that represents an established authorized reply to a requirement.

d. Section III - Supplementary Technical and Supply Management Data:

This section includes those characteristics requirements necessary to support specific logistics functions other than National Stock Number assignment.

e. Appendix A - Reply Tables:

Tables of authorized replies to requirements and reply codes when the tables are too lengthy for inclusion in Section I/III, when applicable.

f. Appendix B - Reference Drawings:

This appendix contains representative illustrations which portray specific variations of one or more generic characteristics. If reference drawings contain requirements pages to be used in conjunction with illustrations for dimensioning purposes, the requirements pages will contain Master Requirement Codes, mode codes, and a statement of the requirement. A response to requirements on a requirements page is necessary only for those Master Requirement Codes applicable to the illustration selected.

g. Appendix C - Technical Data Tables:

This appendix contains conversion charts and similar data pertinent to the requirements in Section I/III, when applicable.

3. Enter administrative MRC CLQL immediately following the last FIIG requirement reply, as instructed below:

MRC	Mode Code	Requirement	Example
CLQL	G	COLLOQUIAL NAME (common usage name by which an item is known)	CLQLGW OVEN WIRE CLOTH*

4. Special Instructions and Indicator Definitions

a. Measurements:

Unless otherwise indicated within a requirement example, enter all measurements in decimal form, carried to the nearest three decimal places, with a minimum of one digit preceding the decimal. For SI (metric), enter all measurements with a minimum of one digit before and after the decimal. For fraction to decimal conversion, see Appendix C.

b. Indicators:

A cross hatch (#) following an AIN, MRC, Reply Code or Drawing Number indicates for "ALL EXCEPT USA" use only.

5. Indexes

a. Index of Data Requirements

This index is arranged in alphabetic sequence by Master Requirement Code, cross-referenced to the applicable data requirement and page number(s).

b. Index of Approved Item Names

This index is arranged in alphabetic sequence referenced to Applicability Key.

c. Applicability Key Index

This index is arranged in Applicability Key Sequence.

6. Maintenance

Requests for revisions and other changes will be directed to:

Index of Master Requirement Codes

NAME 9
ANNQ 9
AKMF 9
THDS 10
AAJD 10
AAJE 11
AAJF 11
AKMG 12
AARN 12
STYL 13
ADJH 13
ABTJ 13
ADZM 13
AKCV 13
AAZK 14
ARQS 14
WGHT 15
ARAG 15
FEAT 16
TEST 16
SPCL 17
RADC 17
ZZZK 18
ZZZT 19
ZZZW 19
ZZZX 19
ZZZY 19
CRTL 20
PRPY 20
ELRN 21
ELCD 21
CXCY 21
AFJK 22
RADD 22
PRMT 22
PMWT 23
PMLC 24
SUPP 24
ZZZP 24
AGAV 25

INDEX OF APPROVED ITEM NAMES COVERED BY THIS FIIG

Approved Item Name	INC	App Key
ANODE, CORROSION PREVENTIVE	13154	A

An item which sacrificially corrodes when coupled to a more noble metal in a conducting medium.

ANODE, FOULING PREVENTIVE	68226	A

An alloy rod which prevents any marine plants, animal and bacterial growth setting in heat exchangers, pumps, box coolers, and the like without damaging the environment. For anodes which prevent corrosion see ANODE, CORROSION PREVENTIVE.

ANODE, IMPRESSED CURRENT, CATHODIC PROTECTION, CORROSION PREVENTION	53587	A

A mixed metal oxide anode used in the cathodic protection system to supply electrical current to the hull of a vessel for the purpose of corrosion prevention.

ANODE, PLATING	30380	B

A positive electrode, used in the electroplating process, by which the electric current enters the plating bath on the way to the opposite pole. When made of the plating material, it maintains constant metallic content in the electrolyte through corrosion. Anode is the opposite to cathode.

APPLICABILITY KEY INDEX

	A	B
NAME	X	X
ANNQ	X	X
AKMF	AR	
THDS	AR	
AAJD	AR	
AAJE	AR	
AAJF	AR	
AKMG	AR	
AARN		X
STYL	X	X
AAUB	AR	AR
ABGG	AR	AR
ABGL	AR	AR
ABKV	AR	AR
ABNM	AR	AR
ABRF	AR	AR
ABRY	AR	AR
ADWK	AR	AR
AJHM	AR	AR
AKMH	AR	AR
AKMJ	AR	AR
AKMK	AR	AR
AKML	AR	AR
AKMM	AR	AR
AKMN	AR	AR
AKMP	AR	AR
AKMQ	AR	AR
AKMR	AR	AR
AKMS	AR	AR
AKMT	AR	AR
ADVR	AR	AR
ADJH	AR	AR
ABTJ	AR	
ADZM	AR	
AKCV	AR	
AAZK	AR	
ARQS	X	
WGHT	X	X
ARAG	AR	
FEAT	AR	AR
TEST	AR	AR
SPCL	AR	AR
RADC	AR	AR
ZZZK	AR	AR
ZZZT	AR	AR
ZZZW	AR	AR
ZZZX	AR	AR
ZZZY	AR	AR

CRTL	AR	AR
PRPY	AR	AR
ELRN	AR	AR
ELCD	AR	AR
CXCY	AR	AR
AFJK	AR	AR
RADD	AR	AR
PRMT	AR	AR
PMWT	AR	AR
PMLC	AR	AR
SUPP	AR	AR
ZZZP	AR	AR
AGAV	AR	AR

SECTION I

APP Key	MRC	Mode Code	Requirements
ALL			
	NAME	D	ITEM NAME

Definition: A NOUN, WITH OR WITHOUT MODIFIERS, BY WHICH AN ITEM OF SUPPLY IS KNOWN.

Reply Instructions: Enter the applicable Item Name Code from the index appearing in the General Information Section. (e.g., NAMED13154*)

ALL

ANNQ	H	MATERIAL AND LOCATION

Definition: THE ELEMENT, COMPOUND, OR MIXTURE OF WHICH THE ITEM IS FABRICATED, EXCLUDING ANY SURFACE TREATMENT, AND ITS LOCATION.

Reply Instructions: Enter the applicable Reply Codes from Appendix A , Table 1, followed by the Reply Code from the table below. (e.g., ANNQHBR0000AKQ*)

For items with multiple materials and/or multiple locations, use AND/OR coding ($$/$), as applicable, entering replies in reply table sequence. (e.g., ANNQHBR0195AKQ$$HBR0196AKQ; ANNQHBR0000AKQ$HBR0194AKQ*; ANNQHBR0000AKR$$HBR0194AKR*; ANNQHBR0000AKR$HBR0194AKR*)*

REPLY CODE	REPLY (AJ91)
AKQ	ANODE
AKR	CORE
AAB	OVERALL

A*

AKMF	D	CORE SURFACE TREATMENT

Definition: CONSISTS OF PLATING, DIP, AND/OR COATING THAT CANNOT BE WIPED OFF. PLATING AND/OR COATING IS ANY CHEMICAL AND/OR METALLIC ADDITIVE, ELECTROCHEMICAL, OR MILD MECHANICAL PROCESS WHICH PROTECTS THE CORE SURFACE.

APP Key	MRC	Mode Code	Requirements

Reply Instructions: Enter the applicable Reply Code from the table below. (e.g., AKMFDCD0000*)

For items with a multiple or optional surface treatment, use AND/OR coding ($$/$), entering replies in reply table sequence. (e.g., AKMFDCD0000$$DCD0009*; AKMFDCD0000$DCD0009*)

REPLY CODE	REPLY (AD09)
CD0000	CADMIUM
CD0009	CADMIUM, QQ-P-416, TYPE 2, CLASS 3 Galvinized (use Reply Code ZN0000)
SNF000	TIN PLATED
ZN0000	ZINC

A*

THDS J THREAD SIZE AND SERIES/TYPE DESIGNATOR

Definition: DESIGNATES THE THREAD DIAMETER, SERIES/TYPE AND NUMBER OF THREADS PER SPECIFIC MEASUREMENT SCALE.

Reply Instructions: Enter the applicable Reply Code from Appendix A , Table 3, followed by the thread diameter.

(e.g., THDSJNP1.250-11-1/2*;

THDSJNC0.250-20*)

If the item is internally and externally threaded, use AND coding ($$), entering the external thread first and the internal thread second.

(e.g., THDSJNC0.250-20$$JNF0.190-32*)

NOTES FOR MRCS AAJD, AAJE, AAJF, AND AKMG: REPLY TO MRCS AAJD OR AAJE, AAJF, AND AKMG IF REPLY CODE NC, NF, NE, UN, NS, JC, JF, JE, OR NJ IS ENTERED IN REPLY TO MRC THDS. REPLY TO MRCS AAJE, AAJF, AND AKMG IF REPLY CODE NM IS ENTERED FOR MRC THDS. REPLY TO MRCS AAJF AND AKMG IF REPLY CODE SM OR SS IS ENTERED FOR MRC THDS. REPLY TO MRC AAJF IF REPLY CODE NP, NT, OR PT IS ENTERED FOR MRC THDS.

A* (See Note Above)

AAJD A THREAD CLASS

APP Key	MRC	Mode Code	Requirements

Definition: A NUMERIC-ALPHA DESIGNATOR INDICATING THE PITCH DIAMETER TOLERANCE AND AN EXTERNAL OR INTERNAL THREAD.

Reply Instructions: Enter the thread class. (e.g., AAJDA3A*)

If the item is internally and externally threaded and each specifies a thread class, use AND coding ($$), to record the thread class, listing the replies in the same sequence as MRC THDS. (e.g., AAJDA3A$$A2A*)

When the source document specifies a maximum and minimum pitch diameter identical to or within the limits of a standard class of thread, reply with the standard class of thread (see Appendix C, Table 1). All class of fits should be reflected by the similar class of thread (e.g., Class 1 fit as 1A Thread Class (external) or 1B Thread Class (internal).

A* (See Note Preceding MRC AAJD)

AAJE J THREAD PITCH DIAMETERS

Definition: THE MINIMUM AND MAXIMUM PITCH DIAMETER LIMITS OF A STRAIGHT SCREW THREAD.

Reply Instructions: Enter the applicable Reply Code from the table below, followed by the numeric values separated by a slash. Precede all values with a P. (e.g., AAJEJAP0.2157/P0.2195*; AAJEJLP1.2/P1.8*)

If the item is internally and externally threaded and each specifies a pitch diameter, use AND coding ($$) to record the minimum and maximum pitch diameter in the same sequence as MRC THDS. (e.g., AAJEJAP0.3654/P0.3682$$JAP0.2157/P0.2195*)

REPLY CODE	REPLY (AA05)
A	INCHES
L	MILLIMETERS

A* (See Note Preceding MRC AAJD)

AAJF D THREAD DIRECTION

Definition: THE DIRECTION OF THE THREAD WHEN VIEWED AXIALLY. A RIGHT-HAND THREAD WINDS IN A CLOCKWISE DIRECTION WHILE A LEFT-HAND THREAD WINDS IN A COUNTERCLOCKWISE DIRECTION.

APP Key	MRC	Mode Code	Requirements

Reply Instructions: Enter the applicable Reply Code from the table below. (e.g., AAJFDR*)

If the item is internally and externally threaded and the threads are not of the same direction, use AND coding ($$), to record the direction of the thread in the same sequence as MRC THDS. (e.g., AAJFDR$$DL*)

REPLY CODE	REPLY (AA38)
L	LEFT-HAND
R	RIGHT-HAND

A* (See Note Preceding MRC AAJD)

AKMG J NOMINAL THREAD LENGTH

Definition: A NOMINAL MEASUREMENT OF THE EXTENT OF THREADS, INCLUDING INCOMPLETE THREADS, ALONG A LINE PARALLEL TO THE LONGITUDINAL AXIS.

Reply Instructions: Enter the applicable Reply Code from the table below, followed by the numeric value. (e.g., AKMGJA0.750*; AKMGJL2.5*)

When the item is internally and externally threaded and the threads are of different lengths use AND coding ($$), to record the nominal thread length in the same sequence as MRC THDS. (e.g., AKMGJA0.375$$JA0.250*)

REPLY CODE	REPLY (AA05)
A	INCHES
L	MILLIMETERS

B

AARN D FABRICATION METHOD

Definition: THE PROCESS USED IN MANUFACTURING THE ITEM.

Reply Instructions: Enter the applicable Reply Code from the table below. (e.g., AARNDDP*; AARNDAN$$DAJ*; AARNDAN$DAJ*)

REPLY CODE	REPLY (AA62)
AN	CAST
AJ	FORGED

APP Key	MRC	Mode Code	Requirements
		DP	ROLLED PLATE
ALL			
	STYL	L	STYLE DESIGNATOR

Definition: THE STYLE DESIGNATION INDICATING THE CONFIGURATION THAT MOST NEARLY CORRESPONDS TO THE APPEARANCE OF THE ITEM.

Reply Instructions: Enter the style number from Appendix B , Reference Drawing Group A or B. (e.g., STYLL1*)

ALL*

ADJH	D	MOUNTING METHOD

Definition: THE MEANS OF ATTACHING THE ITEM.

Reply Instructions: Enter the applicable Reply Code from Appendix A , Table 4. (e.g., ADJHDGY*; ADJHDHA$$DSZ*; ADJHDHA$DSZ*)

A*

ABTJ	A	MOUNTING HOLE QUANTITY

Definition: THE NUMBER OF MOUNTING HOLES PROVIDED.

Reply Instructions: Enter the numeric value. (e.g., ABTJA4*; ABTJA4$A5*)

A*

ADZM	A	INSERT QUANTITY

Definition: THE NUMBER OF INSERTS/INTERLINERS CONTAINED IN THE ITEM.

Reply Instructions: Enter the numeric value. (e.g., ADZMA1*)

An insert (core) may be a strap(s), plate(s), pipe(s), bushing(s), channel, etc.

When a plate has pipe(s), bolt(s), etc. welded in place it is to be considered as one (1) insert (core).

A*

AKCV	D	DRIVE TYPE

APP Key	MRC	Mode Code	Requirements

Definition: INDICATES THE TYPE OF DRIVE FOR TURNING, ROTATING, OR POSITIONING THE MECHANISM.

Reply Instructions: Enter the applicable Reply Code from the table below. (e.g., AKCVDAJ*; AKCVDAL$$DAM*; AKCVDAL$DAM*)

REPLY CODE	REPLY (AG25)
AJ	CROSS RECESS
AL	HEXAGON
AP	KNURL
AH	SLOTTED
AM	SQUARE
AN	SQUARE RECESS

NOTE FOR MRC AAZK: REPLY TO THIS MRC ONLY WHEN REPLY CODE AL, AM, OR AN IS ENTERED FOR MRC AKCV.

A* (See Note Above)

AAZK J WIDTH ACROSS FLATS

Definition: THE SHORTEST STRAIGHT LINE BETWEEN FLATS, PERPENDICULAR TO THE HEIGHT OF THE WRENCHING SURFACE.

Reply Instructions: Enter the applicable Reply Codes from Tables 1 and 2 below, followed by the numeric value. (e.g., AAZKJAA0.347*; AAZKJLA8.813*; AAZKJAB0.437$$JAC0.500*)

Table 1

REPLY CODE	REPLY (AA05)
A	INCHES
L	MILLIMETERS

Table 2

REPLY CODE	REPLY (AC20)
A	NOMINAL
B	MINIMUM
C	MAXIMUM

A

ARQS D CONSTRUCTION

APP Key	MRC	Mode Code	Requirements

Definition: THE STRUCTURAL CHARACTERISTIC OF THE ITEM.

Reply Instructions: Enter the applicable Reply Code from the table below. (e.g., ARQSDABB*; ARQSDABB$DAAQ*)

REPLY CODE	REPLY (AL59)
ABB	SECTIONALIZED
AAQ	SOLID

ALL

WGHT J WEIGHT

Definition: A RELATIVE MEASURE OF THE MASS OF AN ITEM WITH RESPECT TO ITS DENSITY.

Reply Instructions: Enter the applicable Reply Code from the table below, followed by the numeric value. (e.g., WGHTJD16.0*)

For items that do not require a rating, change the Mode Code to K and enter Reply Code N. (e.g., WGHTKN*)

For precious metals use troy system of weight; for non-precious metals use avoirdupois system of weight.

REPLY CODE	REPLY (AB10)
D	GRAINS
A	GRAMS
K	KILOGRAMS
U	OUNCES
P	POUNDS

A *

ARAG J CURRENT RATING

Definition: THE AMOUNT OF CURRENT FOR WHICH THE ITEM IS DESIGNED.

Reply Instructions: Enter the applicable Reply Code from the table below, followed by the numeric value. (e.g., ARAGJA425.0*)

APP Key	MRC	Mode Code	Requirements

For items that do not require a rating, change the Mode Code to K and enter Reply Code N. (e.g., ARAGKN*)

REPLY CODE	REPLY (AC30)
A	AMPERES
U	MICROAMPERES
L	MILLIAMPERES

ALL*

FEAT G SPECIAL FEATURES

Definition: THOSE UNUSUAL OR UNIQUE CHARACTERISTICS OR QUALITIES OF AN ITEM NOT COVERED IN THE OTHER REQUIREMENTS AND WHICH ARE DETERMINED TO BE ESSENTIAL FOR IDENTIFICATION.

Reply Instructions: Enter the reply in clear text. Separate multiple replies with a semicolon. (e.g., FEATGADJUSTABLE NOSE CLIP*; FEATGADJUSTABLE NOSE PIECE; DISPOSABLE*)

ALL*

TEST J TEST DATA DOCUMENT

Definition: THE SPECIFICATION, STANDARD, DRAWING, OR SIMILAR INSTRUMENT THAT SPECIFIES ENVIRONMENTAL AND PERFORMANCE REQUIREMENTS OR TEST CONDITIONS UNDER WHICH AN ITEM IS TESTED AND ESTABLISHES ACCEPTABLE LIMITS WITHIN WHICH THE ITEM MUST CONFORM IDENTIFIED BY AN ALPHABETIC AND/OR NUMERIC REFERENCE NUMBER. INCLUDES THE COMMERCIAL AND GOVERNMENT ENTITY (CAGE) CODE OF THE ENTITY CONTROLLING THE INSTRUMENT.

Reply Instructions: Enter the applicable Reply Code from the table below, followed by the 5-position CAGE Code, a dash, and the document identification number.

(e.g., TESTJA12345-CWX654321*;

TESTJA1234A-654321$$JB5556A-663654*;

TESTJAA2345-654321$JB55566-663654*)

REPLY	REPLY (AC28)

APP Key	MRC	Mode Code	Requirements
		CODE	
		A	SPECIFICATION (Includes engineering type bulletins, brochures, etc., that reflect specification type data in specification format; excludes commercial catalogs, industry directories, and similar trade publications, reflecting general type data on certain environmental and performance requirements and test conditions that are shown as "typical," "average," "nominal," etc.)
		B	STANDARD (Includes industry or association standards, individual manufacturer standards, etc.)
		C	DRAWING (This is the basic governing drawing, such as a contractor drawing, original equipment manufacturer drawing, etc.; excludes any specification, standard, or other document that may be referenced in a basic governing drawing)

ALL*

SPCL G SPECIAL TEST FEATURES

Definition: TEST CONDITIONS AND RATINGS, OR ENVIRONMENTAL AND PERFORMANCE REQUIREMENTS THAT ARE DIFFERENT, MORE CRITICAL, OR MORE SPECIFIC THAN THOSE SPECIFIED IN A GOVERNING TEST DATA DOCUMENT.

Reply Instructions: Enter the reply in clear text. (e.g., SPCLGSELECTED AND TESTED FOR NAVIGATIONAL SYSTEMS*)

NOTE FOR MRC RADC: REPLY TO THIS MRC ONLY WHEN THE ITEM CONTAINS RADIOACTIVE MATERIAL. IF MRC RADC IS ANSWERED, A REPLY TO MRC RADD IN SECTION III IS MANDATORY.

ALL* (See Note Above)

RADC D RADIOACTIVE CONTENT

Definition: AN INDICATION OF WHETHER OR NOT THE ITEM CONTAINS RADIOACTIVE MATERIALS.

Reply Instructions: Enter the Reply Code from the table below. (e.g., RADCDP*)

REPLY CODE	REPLY (AN54)
P	CONTAINS RADIOACTIVE MATERIAL

APP Key	MRC	Mode Code	Requirements
ALL*			
	ZZZK	J	SPECIFICATION/STANDARD DATA

Definition: THE DOCUMENT DESIGNATOR OF THE SPECIFICATION OR STANDARD WHICH ESTABLISHED THE ITEM OF SUPPLY.

Reply Instructions: Enter the applicable Reply Code from the table below, followed by the Commercial and Government Entity (CAGE) Code of the entity controlling the document, a dash, and the document designator. The agency that controls the limited coordination document must be preceded and followed by a slash following the designator. The word canceled or superseded must be preceded and followed by a slash for the designator. Professional and industrial association specifications/standards are differentiated from a manufacturer's specification in that the data has been coordinated and published by the professional and industrial association. Include amendments and revisions where applicable.

(e.g., ZZZKJT81337-30642B*;

ZZZKJS81349-MIL-D-180 REV1/CANCELED/*;

ZZZKJP80205-NAS1103*;

ZZZKJS81349-MIL-C-1140C/CE/*;

ZZZKJT81337-30642B$$JP80205-NAS1103*)

REPLY CODE	REPLY (AN62)
S	GOVERNMENT SPECIFICATION
T	GOVERNMENT STANDARD
D	MANUFACTURERS SOURCE CONTROL
R	MANUFACTURERS SPECIFICATION
N	MANUFACTURERS SPECIFICATION CONTROL
M	MANUFACTURERS STANDARD
B	NATIONAL STD/SPEC
A	PROFESSIONAL/INDUSTRIAL ASSOCIATION SPECIFICATION
P	PROFESSIONAL/INDUSTRIAL ASSOCIATION STANDARD

NOTE FOR MRC ZZZT: IF THE SPECIFICIATION/STANDARD CITED IN REPLY TO MRC ZZZK IS NONDEFINITIVE, REPLY TO MRC ZZZT. THIS REPLY IS THE DATA WHICH IS NOT RECORDED IN SEGMENT C.

APP Key	MRC	Mode Code	Requirements
ALL* (See Note Above)			
	ZZZT	J	NONDEFINITIVE SPEC/STD DATA

Definition: THE NUMBER, LETTER, OR SYMBOL THAT INDICATES THE TYPE, STYLE, GRADE, CLASS, AND THE LIKE, OF AN ITEM IN A NONIDENTIFYING SPECIFICATION OR STANDARD.

Reply Instructions: Enter the applicable Reply Code from Appendix A , Table 2 , followed by the appropriate number, letter, or symbol. (e.g., ZZZTJTY1*; ZZZTJTY1$$JSTA*; ZZZTJTY1$JSTA*)

ALL*

ZZZW	G	DEPARTURE FROM CITED DOCUMENT

Definition: THE TECHNICAL DIFFERENTIATING CHARACTERISTIC(S) OF AN ITEM OF SUPPLY WHICH DEPART(S) FROM THE TEXT OF A SPECIFICATION OR A STANDARD IN THAT IT REPRESENTS A SELECTION OF CHARACTERISTICS STATED IN THE SPECIFICATION OR STANDARD AS BEING OPTIONAL, OR A VARIATION FROM ONE OR MORE OF THE STATED CHARACTERISTICS, OR AN ADDITIONAL CHARACTERISTIC NOT STATED IN THE SPECIFICATION OR STANDARD.

Reply Instructions: Enter the reply in clear text. (e.g., ZZZWGAS MODIFIED BY MATERIAL*)

ALL*

ZZZX	G	DEPARTURE FROM CITED DESIGNATOR

Definition: THE VARIATION WHEN THE ITEM IS IN CONFORMITY WITH A TYPE DESIGNATOR COVERED BY A SPECIFICATION OR STANDARD, EXCEPT IN REGARD TO ONE OR MORE TECHNICAL DIFFERENTIATING CHARACTERISTICS.

Reply Instructions: Enter the reply in clear text. (e.g., ZZZXGAS MODIFIED BY MATERIAL*)

ALL*

ZZZY	G	REFERENCE NUMBER DIFFERENTIATING CHARACTERISTICS

APP Key	MRC	Mode Code	Requirements

Definition: A FEATURE OF THE ITEM OF SUPPLY WHICH MUST BE SPECIFICALLY RECORDED WHEN THE REFERENCE NUMBER COVERS A RANGE OF ITEMS.

Reply Instructions: Enter the reply in clear text. (e.g., ZZZYGCOLOR CODED LEADS*; ZZZYGAS DIFFERENTIATED BY MATERIAL*)

ALL*

CRTL A CRITICALITY CODE JUSTIFICATION

Definition: THE MASTER REQUIREMENT CODES OF THOSE REQUIREMENTS WHICH ARE TECHNICALLY CRITICAL BY REASON OF TOLERANCE, FIT, PERFORMANCE, OR OTHER CHARACTERISTICS WHICH AFFECT IDENTIFICATION OF THE ITEM.

Reply Instructions: Enter the Master Requirement Code for the requirement, the reply to which renders the item as being critical. (e.g., CRTLAMATL*; CRTLAMATL$$ASURF*)

Reply to this requirement only if the header record for the item identification for the item being identified has been coded as critical.

NOTE FOR MRC PRPY: IF DOCUMENT AVAILABILITY CODE B, D, F, OR H, REPLY TO MRC PRPY.

ALL* (See Note Above)

PRPY A PROPRIETARY CHARACTERISTICS

Definition: IDENTIFICATION OF THOSE CHARACTERISTICS INCLUDED IN THE DESCRIPTION FOR WHICH A NON-GOVERNMENT ACTIVITY HAS IDENTIFIED ALL OR SELECTED CHARACTERISTICS OF THE ITEM AS BEING PROPRIETARY AND THEREFORE RESTRICTED FROM RELEASE OUTSIDE THE GOVERNMENT WITHOUT PRIOR PERMISSION OF THE ORIGINATOR OF THE DATA.

Reply Instructions: Enter the MRC codes of the individual characteristics of the description which are marked proprietary on the technical data, using AND coding ($$) for multiple characteristics. If all the MRCs are proprietary, enter the reply PACS. If none of the MRCs is proprietary, enter the reply NPAC. (e.g., PRPYAPACS*; PRPYANPAC*; PRPYAMATL$$ASURF*)

ALL*

APP Key	MRC	Mode Code	Requirements
	ELRN	G	EXTRA LONG REFERENCE NUMBER

Definition: A REFERENCE NUMBER EXCEEDING 32 POSITIONS.

Reply Instructions: Enter the entire reference number. Do not include the 5-position Commercial and Government Entity (CAGE) Code unless there is more than one extra long reference number on the NSN, (e.g., ELRNGANN112036BIL060557LEN313605UZ62365*).

If there is more than one extra long reference number on the NSN, include the CAGE or NCAGE and separate each reference by using the "&" character, (e.g., 28480 ANN112036BIL060557LEN313605UZ62365 & S1234 NN112036BIL060557LEN313605UZ62365).

In determining quantity of characters in the reference number, count will be made after modification in accordance with Volume 2, Chapter 9, FLIS Procedures Manual, DoD 4100.39-M.

ALL*

	ELCD	D	EXTRA LONG CHARACTERISTIC DESCRIPTION

Definition: A DESCRIPTION THAT EXCEEDS 5000 CHARACTERS.

Reply Instructions: Enter the Reply Code from the table below. (e.g., ELCDDA*)

REPLY CODE	REPLY (AN58)
A	ADDITIONAL DESCRIPTIVE DATA ON MANUAL RECORD

ALL *

	CXCY	G	PART NAME ASSIGNED BY CONTROLLING AGENCY

Definition: THE NAME ASSIGNED TO THE ITEM BY THE GOVERNMENT AGENCY OR COMMERICAL ORGANIZATION CONTROLLING THE DESIGN OF THE ITEM.

Reply Instructions: Enter the reply in clear text. (e.g., CXCYGIODINE TINCTURE, STRONG, USP*)

SECTION III

APP Key	MRC	Mode Code	Requirements
ALL			
	AFJK	J	CUBIC MEASURE

Definition: A MEASUREMENT OF VOLUME TAKEN BY MULTIPLYING THE LENGTH BY THE WIDTH BY THE HEIGHT OF AN ITEM AND RENDERED IN CUBIC UNITS.

Reply Instructions: Enter the applicable Reply Code from the table below, followed by the numeric value. (e.g., AFJKJB10.25*; AFJKJC167.99*)

REPLY CODE	REPLY (AD42)
C	CUBIC CENTIMETERS
B	CUBIC INCHES

NOTE FOR MRC RADD: A REPLY MUST BE ENTERED FOR THIS MRC IF A REPLY IS ENTERED FOR MRC RADC IN SECTION I.

ALL (See Note Above)

RADD	J	RADIONUCLIDES DATA

Definition: THE NAME AND AMOUNT OF THE RADIONUCLIDE.

Reply Instructions: Enter the applicable Reply Code from the table below, followed by the applicable Reply Code from Appendix A , Table 5 and the numeric value. Where radioactivity varies from one sample to another, enter the maximum value. (e.g., RADDJJFAAAD10.000*)

REPLY CODE	REPLY (AG67)
JF	CURIES
JH	MICROCURIES
JG	MILLICURIES

ALL

PRMT	D	PRECIOUS MATERIAL

APP Key	MRC	Mode Code	Requirements

Definition: IDENTIFICATION OF THE PRECIOUS MATERIAL CONTAINED IN THE ITEM.

Reply Instructions: Enter the applicable Reply Code from the table below. (e.g., PRMTDAGA000*; PRMTDAUA000$$DAGA000*; PRMTDAUA000$DAGA000*)

REPLY CODE	REPLY (MA01)
AUA000	GOLD
IRA000	IRIDIUM
AZA000	OSMIUM
PDA000	PALLADIUM
PTA000	PLATINUM
RHA000	RHODIUM
RTA000	RUTHENIUM
AGA000	SILVER

ALL

PMWT	J	PRECIOUS MATERIAL AND WEIGHT

Definition: AN INDICATION OF THE PRECIOUS MATERIAL CONTAINED IN THE ITEM, AND THE AMOUNT PER A MEASUREMENT SCALE.

Reply Instructions: Enter the applicable Reply Codes from Tables 1 and 2 below, followed by the numeric value. Enter multiple replies in Table 1 sequence. (e.g., PMWTJPTA000R0.780*; PMWTJAUA000F0.500$$JAGA000R0.780*; PMWTJAUA000F0.500$JAGA000R0.780*)

Table 1

REPLY CODE	REPLY (MA01)
AUA000	GOLD
IRA000	IRIDIUM
AZA000	OSMIUM
PDA000	PALLADIUM
PTA000	PLATINUM
RHA000	RHODIUM
RTA000	RUTHENIUM
AGA000	SILVER

Table 2

REPLY CODE	REPLY (AG14)
E	GRAINS, TROY
R	GRAMS
F	OUNCES, TROY

APP Key	MRC	Mode Code	Requirements

ALL

PMLC J PRECIOUS MATERIAL AND LOCATION

Definition: AN INDICATION OF THE PRECIOUS MATERIAL AND ITS LOCATION IN THE ITEM.

Reply Instructions: Enter the applicable Reply Code from the table below, followed by the location in clear text. (e.g., PMLCJAUA000TERMINALS*; PMLCJAUA000TERMINALS$$JAGA000INTERNAL SURFACES*; PMLCJAGA000TERMINALS$JAUA000INTERNAL SURFACES*)

REPLY CODE	REPLY (MA01)
AUA000	GOLD
IRA000	IRIDIUM
AZA000	OSMIUM
PDA000	PALLADIUM
PTA000	PLATINUM
RHA000	RHODIUM
RTA000	RUTHENIUM
AGA000	SILVER

ALL

SUPP G SUPPLEMENTARY FEATURES

Definition: CHARACTERISTICS OR QUALITIES OF AN ITEM, NOT COVERED IN ANY OTHER REQUIREMENT, WHICH ARE CONSIDERED ESSENTIAL INFORMATION FOR ONE OR MORE FUNCTIONS EXCLUDING NSN ASSIGNMENT.

Reply Instructions: Enter the reply in clear text. (e.g., SUPPGMAY INCL HOLE IN UPPER SUPPORT FOR MTG DURING SHIPMENT*)

ALL

ZZZP J PURCHASE DESCRIPTION IDENTIFICATION

Definition: THE CONTROLLING ACTIVITY AND IDENTIFICATION OF A DOCUMENT USED IN LIEU OF A SPECIFICATION IN THE PROCUREMENT OF AN ITEM OF SUPPLY.

APP Key	MRC	Mode Code	Requirements
	Reply Instructions: Enter the 5-position Commercial and Government Entity (CAGE) Code, followed by the identifying number of the document.		
	(e.g., ZZZPJ81337-30624A*)		
ALL			
	AGAV	G	END ITEM IDENTIFICATION
	Definition: THE NATIONAL STOCK NUMBER OR THE IDENTIFICATION INFORMATION OF THE END EQUIPMENT FOR WHICH THE ITEM IS A PART.		
	Reply Instructions: Enter the reply in clear text.		
	(e.g., AGAVG3930-00-000-0000*;		
	AGAVGFORKLIFT TRUCK, SMITH CORP, MODEL 12, TYPE A*)		

Reply Tables

Table 1 - MATERIALS 26
Table 2 - NON-DEFINITIVE SPEC/STD DATA 28
Table 3 - THREAD SERIES 30
Table 4 - MOUNTING DATA 30
Table 5 - RADIONUCLIDES DATA 30

Table 1 - MATERIALS

MATERIALS

REPLY CODE	REPLY (AD09)
BR0000	BRASS
BR0194	BRASS, QQ-A-660, TYPE 1, CLASS A
BR0195	BRASS, QQ-A-660, TYPE 1, CLASS B
BR0196	BRASS, QQ-A-660, TYPE 2, CLASS A
BR0197	BRASS, QQ-A-660, TYPE 2, CLASS C
BR0198	BRASS, QQ-A-660, TYPE 3, CLASS D, STYLE 1
BR0199	BRASS, QQ-A-660, TYPE 3, CLASS D, STYLE 2
BR0200	BRASS, QQ-B-639, ALLOY 482
CD0000	CADMIUM
CD0017	CADMIUM, QQ-A-671
CM0000	COBALT
CM0002	COBALT, MIL-C-3309
CU0000	COPPER
CK0364	COPPER ALLOY, MIL-C-15726
CU0198	COPPER, MIL-C-915
CU0050	COPPER, QQ-A-673, TYPE 1
CU0051	COPPER, QQ-A-673, TYPE 2
CU0052	COPPER, QQ-A-673, TYPE 3
AU0000	GOLD
GP0000	GRAPHITE
GP0001	GRAPHITE, MIL-A-18279, CLASS 1, TYPE GR 30
GP0002	GRAPHITE, MIL-A-18279, CLASS 1, TYPE GR 60
GP0003	GRAPHITE, MIL-A-18279, CLASS 1, TYPE GR 80
GP0005	GRAPHITE, MIL-A-18279, CLASS 2, TYPE GRHH
GP0004	GRAPHITE, MIL-A-18279, CLASS 2, TYPE GRHS
RR0000	IRIDIUM
PBD000	LEAD ALLOY
PB0005	LEAD ALLOY, MIL-A-23871, GRADE A, TYPE 1
PB0006	LEAD ALLOY, MIL-A-23871, GRADE A, TYPE 2
PB0007	LEAD ALLOY, MIL-A-23871, GRADE B, TYPE 1
PB0008	LEAD ALLOY, MIL-A-23871, GRADE B, TYPE 2

REPLY CODE	REPLY (AD09)
MGA000	MAGNESIUM ALLOY
MG0027	MAGNESIUM ALLOY, MIL-A-21412, CLASS 1, TYPE MHB-135A
MG0028	MAGNESIUM ALLOY, MIL-A-21412, CLASS 1, TYPE MHB-135B
MG0029	MAGNESIUM ALLOY, MIL-A-21412, CLASS 1, TYPE MHB-135C
MG0024	MAGNESIUM ALLOY, MIL-A-21412, CLASS 1, TYPE MHP-135A
MG0025	MAGNESIUM ALLOY, MIL-A-21412, CLASS 1, TYPE MHP-135B
MG0026	MAGNESIUM ALLOY, MIL-A-21412, CLASS 1, TYPE MHP-135C
MG0031	MAGNESIUM ALLOY, MIL-A-21412, CLASS 2, TYPE MOB-50
MG0030	MAGNESIUM ALLOY, MIL-A-21412, CLASS 2, TYPE MOP-50
MG0039	MAGNESIUM ALLOY, MIL-A-21412, CLASS 2, TYPE MRW-1.5F
MG0040	MAGNESIUM ALLOY, MIL-A-21412, CLASS 2, TYPE MSW-0.23F
MG0038	MAGNESIUM ALLOY, MIL-A-21412, CLASS 2, TYPE MTC-450
MG0032	MAGNESIUM ALLOY, MIL-A-21412, CLASS 2, TYPE MTS-42D
MG0033	MAGNESIUM ALLOY, MIL-A-21412, CLASS 2, TYPE MTS-42E
MG0034	MAGNESIUM ALLOY, MIL-A-21412, CLASS 2, TYPE MTS-52E
MG0035	MAGNESIUM ALLOY, MIL-A-21412, CLASS 2, TYPE MTS-52F
MG0036	MAGNESIUM ALLOY, MIL-A-21412, CLASS 2, TYPE MTS-53
MG0037	MAGNESIUM ALLOY, MIL-A-21412, CLASS 2, TYPE MTS-70
HG0000	MERCURY
NF0000	NICKEL
NF0021	NICKEL, QQ-A-677, TYPE 1
NF0022	NICKEL, QQ-A-677, TYPE 2
MZ0000	OSMIUM
PD0000	PALLADIUM
PDD000	PALLADIUM-SILVER ALLOY
PZ0000	PHOSPHOR BRONZE
PZ0003	PHOSPHOR BRONZE, QQ-B-750, COMP A
PZ0004	PHOSPHOR BRONZE, QQ-B-750, COMP B
PZ0005	PHOSPHOR BRONZE, QQ-B-750, COMP D
PT0000	PLATINUM
PTA000	PLATINUM-PALLADIUM
PT0001	PLATINUM-PALLADIUM, MIL-A-23918
RH0000	RHODIUM
RT0000	RUTHENIUM
AG0000	SILVER
ST0000	STEEL
ST2358	STEEL, ASTM-A36
SN0000	TIN
ZN0000	ZINC
ZN0257	ZINC, MIL-A-18001
ZN0036	ZINC, MIL-A-18001, CLASS 1, TYPE ZBP
ZN0037	ZINC, MIL-A-18001, CLASS 1, TYPE ZDM
ZN0033	ZINC, MIL-A-18001, CLASS 1, TYPE ZEP, STYLE A
ZN0034	ZINC, MIL-A-18001, CLASS 1, TYPE ZEP, STYLE B
ZN0035	ZINC, MIL-A-18001, CLASS 1, TYPE ZEP, STYLE C
ZN0029	ZINC, MIL-A-18001, CLASS 1, TYPE ZHB
ZN0030	ZINC, MIL-A-18001, CLASS 1, TYPE ZHC
ZN0028	ZINC, MIL-A-18001, CLASS 1, TYPE ZHS

REPLY CODE	REPLY (AD09)
ZN0090	ZINC, MIL-A-18001, CLASS 1, TYPE ZPN
ZN0038	ZINC, MIL-A-18001, CLASS 1, TYPE ZRN
ZN0031	ZINC, MIL-A-18001, CLASS 1, TYPE ZSS
ZN0032	ZINC, MIL-A-18001, CLASS 1, TYPE ZTS
ZN0039	ZINC, QQ-Z-285 (Canceled)

Table 2 - NON-DEFINITIVE SPEC/STD DATA

NON-DEFINITIVE SPEC/STD DATA

REPLY CODE	REPLY (AD08)
AL	ALLOY
AN	ANNEX
AP	APPENDIX
AC	APPLICABILITY CLASS
AR	ARRANGEMENT
AS	ASSEMBLY
AB	ASSORTMENT
BX	BOX
CY	CAPACITY
CA	CASE
CT	CATEGORY
CL	CLASS
CE	CODE
CR	COLOR
CC	COMBINATION CODE
CN	COMPONENT
CP	COMPOSITION
CM	COMPOUND
CD	CONDITION
CS	CONSTRUCTION
DE	DESIGN
DG	DESIGNATOR
DW	DRAWING NUMBER
EG	EDGE
EN	END
FY	FAMILY
FG	FIGURE
FN	FINISH
FM	FORM
FA	FORMULA
GR	GRADE
GP	GROUP
BA	IMAGE COLOR
NS	INSERT
TM	ITEM
KD	KIND
KT	KIT

REPLY CODE	REPLY (AD08)
LG	LENGTH
LT	LIMIT
MK	MARK
AA	MARKER
ML	MATERIAL
BB	MAXIMUM DENSITY
MH	MESH
ME	METHOD
BC	MINIMUM DENSITY
MD	MODEL
MT	MOUNTING
NR	NUMBER
PT	PART
PN	PATTERN
PC	PHYSICAL CONDITION
PS	PIECE
PL	PLAN
PR	POINT
QA	QUALITY
RN	RANGE
RT	RATING
RF	REFERENCE NUMBER
SC	SCHEDULE
SB	SECTION
SL	SELECTION
SE	SERIES
SV	SERVICE
SX	SET
SA	SHADE
SH	SHAPE
SG	SHEET
SZ	SIZE
PZ	SPECIES
SQ	SPECIFICATION SHEET
SD	SPEED
ST	STYLE
SS	SUBCLASS
SF	SUBFORM
SP	SUBTYPE
SN	SURFACE CONDITION
SY	SYMBOL
SM	SYSTEM
TB	TABLE
TN	TANNAGE
TP	TEMPER
TX	TEXTURE
TK	THICKNESS
TT	TREATMENT

REPLY CODE	REPLY (AD08)
TR	TRIM
TY	TYPE
YN	UNIT
VA	VARIETY
WT	WEIGHT
WD	WIDTH

Table 3 - THREAD SERIES
THREAD SERIES

REPLY CODE	REPLY (AH06)
SM	ISO M
SS	ISO S
NP	NPT
NT	NPTF
PT	PTF-SAE SHORT
UN	UN
NC	UNC
NE	UNEF
NF	UNF
NJ	UNJ
JC	UNJC
JE	UNJEF
JF	UNJF
NM	UNM
NS	UNS

Table 4 - MOUNTING DATA
MOUNTING DATA

REPLY CODE	REPLY (AB89)
AA	BOLT
HC	CABLE
TA	CHANNEL (core)
TB	EYEBOLT (core)
GY	HOLES (in anode only)
AK	HOOK
DT	PIPE (core)
HA	STRAPS (core)
GZ	THREADED END
HB	THREADED PLUG
SZ	WIRE (core)

Table 5 - RADIONUCLIDES DATA
RADIONUCLIDES DATA

REPLY CODE	REPLY (AN55)	RADIONUCLIDES
AAAB	ACTINIUM (89)	AC-227
AAAC	ACTINIUM (89)	AC-228
AAAD	AMERICIUM (95)	AM-241
AAAE	AMERICIUM (95)	AM-243
AAAF	ANTIMONY (51)	SB-122
AAAG	ANTIMONY (51)	SB-124
AAAH	ANTIMONY (51)	SB-125
AAAJ	ARGON (18)	AR-37
AAAK	ARGON (18)	AR-41
AAAL	ARGON (18)	AR-41, UNCOMPRESSED
AAAM	ARSENIC (33)	AS-73
AAAN	ARSENIC (33)	AS-74
AAAP	ARSENIC (33)	AS-76
AAAQ	ARSENIC (33)	AS-77
AAAR	ASTATINE (85)	AT-211
AAAS	BARIUM (56)	BA-131
AAAT	BARIUM (56)	BA-133
AAAW	BARIUM (56)	BA-140
AAAX	BERKELIUM (97)	BK-249
AAAY	BERYLLIUM (4)	BE-7
AAAZ	BISMUTH (83)	BI-206
AABA	BISMUTH (83)	BI-207
AABB	BISMUTH (83)	BI-210
AABC	BUSMUTH (83)	BI-212
AABD	BROMINE (35)	BR-82
AABE	CADMIUM (48)	CD-109
AABG	CADMIUM (48)	CD-115
AABF	CADMIUM (48)	CD-115M
AABH	CALCIUM (20)	CA-45
AABJ	CALCIUM (20)	CA-47
AABK	CALIFORNIUM (98)	CF-249
AABL	CALIFORNIUM (98)	CF-250
AABM	CALIFORNIUM (98)	CF-252
AABN	CARBON (6)	C-14
AABP	CERIUM (58)	CE-141
AABQ	CERIUM (58)	CE-143
AABR	CERIUM (58)	CE-144
AABS	CESIUM (55)	CS-131
AABW	CESIUM (55)	CS-134
AABT	CESIUM (55)	CS-134M
AABX	CESIUM (55)	CS-135
AABY	CESIUM (55)	CS-136
AABZ	CESIUM (55)	CS-137
AACA	CHLORINE (17)	CL-36
AACB	CHLORINE (17)	CL-38
AACC	CHROMIUM (24)	CR-51
AACD	COBALT (27)	CO-56

REPLY CODE	REPLY (AN55)	RADIONUCLIDES
AACE	COBALT (27)	CO-57
AACG	COBALT (27)	CO-58
AACF	COBALT (27)	CO-58M
AACH	COBALT (27)	CO-60
AACJ	COPPER (29)	CU-64
AACK	CURIUM (96)	CM-242
AACL	CURIUM (96)	CM-243
AACM	CURIUM (96)	CM-244
AACN	CURIUM (96)	CM-245
AACP	CURIUM (96)	CM-246
AACQ	DYSPROSIUM (66)	DY-154
AACR	DYSPROSIUM (66)	DY-165
AACS	DYSPROSIUM (66)	DY-166
AACT	ERBIUM (68)	ER-169
AACW	ERBIUM (68)	ER-171
AACX	EUROPIUM (63)	EU-150
AACZ	EUROPIUM (63)	EU-152
AACY	EUROPIUM (63)	EU-152M
AADA	EUROPIUM (63)	EU-154
AADB	EUROPIUM (63)	EU-155
AADC	FLUORINE (9)	F-18
AADD	GADOLINIUM (64)	GD-153
AADE	GADOLINIUM (64)	GD-159
AADF	GALLIUM (31)	GA-67
AADG	GALLIUM (31)	GA-72
AADH	GERMANIUM (32)	GE-71
AADJ	GOLD (79)	AU-193
AADK	GOLD (79)	AU-194
AADL	GOLD (79)	AU-195
AADM	GOLD (79)	AU-196
AADN	GOLD (79)	AU-198
AADP	GOLD (79)	AU-199
AADQ	HAFNIUM (72)	HF-181
AADR	HOLMIUM (67)	HO-166
	HYDROGEN (1)	H-3 (see TRITIUM)
AADS	INDIUM (49)	IN-113M
AADT	INDIUM (49)	IN-114M
AADX	INDIUM (49)	IN-115
AADW	INDIUM (49)	IN-115M
AADY	IODINE (53)	I-124
AADZ	IODINE (53)	I-125
AAEA	IODINE (53)	I-126
AAEB	IODINE (53)	I-129
AAEC	IODINE (53)	I-131
AAED	IODINE (53)	I-132
AAEE	IODINE (53)	I-133
AAEF	IODINE (53)	I-134

REPLY CODE	REPLY (AN55)	RADIONUCLIDES
AAEG	IODINE (53)	I-135
AAEH	IRIDIUM (77)	IR-190
AAEJ	IRIDIUM (77)	IR-192
AAEK	IRIDIUM (77)	IR-194
AAEL	IRON (26)	FE-55
AAEM	IRON (26)	FE-59
AAEQ	KRYPTON (36)	KR-85
AAEN	KRYPTON (36)	KR-85M
AAEP	KRYPTON (36)	KR-85M, UNCOMPRESSED
AAER	KRYPTON (36)	KR-85, UNCOMPRESSED
AAES	KRYPTON (36)	KR-87
AAET	KRYPTON (36)	KR-87, UNCOMPRESSED
AAEW	LANTHANUM (57)	LA-140
AAEX	LEAD (82)	PB-203
AAEY	LEAD (82)	PB-210
AAEZ	LEAD (82)	PB-212
AAFA	LUTECIUM (71)	LU-172
AAFB	LUTECIUM (71)	LU-177
AAFC	MAGNESIUM (12)	MG-28
AAFD	MANGANESE (25)	MN-52
AAFE	MANGANESE (25)	MN-54
AAFF	MANGANESE (25)	MN-56
AAFH	MERCURY (80)	HG-197
AAFG	MERCURY (80)	HG-197M
AAFJ	MERCURY (80)	HG-203
AAFK	MIXED FISSION PRODUCTS	MF-P
AAFL	MOLYBDENUM (42)	MO-99
AAFM	NEODYMIUM (60)	ND-147
AAFN	NEODYMIUM (60)	ND-149
AAFP	NEPTUNIUM (93)	NP-237
AAFQ	NEPTUNIUM (93)	NP-239
AAFR	NICKEL (28)	NI-56
AAFS	NICKEL (28)	NI-59
AAFT	NICKEL (28)	NI-63
AAFW	NICKEL (28)	NI-65
AAFX	NIOBIUM (41)	NB-93M
AAFY	NIOBIUM (41	NB-95
AAFZ	NIOBIUM (41)	NB-97
AAGA	OSMIUM (76)	OS-185
AAGC	OSMIUM (76)	OS-191
AAGB	OSMIUM (76)	OS-191M
AAGD	OSMIUM (76)	OS-193
AAGE	PALLADIUM (46)	PD-103
AAGF	PALLADIUM (46)	PD-109
AAGG	PHOSPHOROUS (15)	P-32
AAGH	PLATINUM (78)	PT-191

REPLY CODE	REPLY (AN55)	RADIONUCLIDES
AAGJ	PLATINUM (78)	PT-193
AAGK	PLATINUM (78)	PT-193M
AAGM	PLATINUM (78)	PT-197
AAGL	PLATINUM (78)	PT-197M
AAGN	PLUTONIUM (94)	PU-238
AAGP	PLUTONIUM (94)	PU-239
AAGQ	PLUTONIUM (94)	PU-240
AAGR	PLUTONIUM (94)	PU-241
AAGS	PLUTONIUM (94)	PU-242
AAGT	POLONIUM (84)	PO-210
AAGW	POTASSIUM (19)	K-42
AAGX	POTASSIUM (19)	K-43
AAGY	PRASEODYMIUM (59)	PR-142
AAGZ	PRASEODYMIUM (59)	PR-143
AAHA	PROMETHIUM (61)	PM-147
AAHB	PROMETHIUM (61)	PM-149
AAHC	PROTACTINIUM (91)	PA-230
AAHD	PROTACTINIUM (91)	PA-231
AAHE	PROTACTINIUM (91)	PA-233
AAHF	RADIUM (88)	RA-223
AAHG	RADIUM (88)	RA-224
AAHH	RADIUM (88)	RA-226
AAHJ	RADIUM (88)	RA-228
AAHK	RADON (86)	RN-220
AAHL	RADON (86)	RN-222
AAHR	RHENIUM (75)	RE-NATURAL
AAHM	RHENIUM (75)	RE-183
AAHN	RHENIUM (75)	RE-186
AAHP	RHENIUM (75)	RE-187
AAHQ	RHENIUM (75)	RE-188
AAHS	RHODIUM (45)	RH-103M
AAHT	RHODIUM (45)	RH-105
AAHY	RUBIDIUM (37)	RB-NATURAL
AAHW	RUBIDIUM (37)	RB-86
AAHX	RUBIDIUM (37)	RB-87
AAHZ	RUTHENIUM (44)	RU-97
AAJA	RUTHENIUM (44)	RU-103
AAJB	RUTHENIUM (44)	RU-105
AAJC	RUTHENIUM (44)	RU-106
AAJD	SAMARIUM (62)	SM-145
AAJE	SAMARIUM (62)	SM-147
AAJF	SAMARIUM (62)	SM-151
AAJG	SAMARIUM (62)	SM-153
AAJH	SCANDIUM (21)	SC-46
AAJJ	SCANDIUM (21)	SC-47
AAJK	SCANDIUM (21)	SC-48
AAJL	SELENIUM (34)	SE-75

REPLY CODE	REPLY (AN55)	RADIONUCLIDES
AAJM	SILICON (14)	SI-31
AAJN	SILVER (47)	AG-105
AAJP	SILVER (47)	AG-110M
AAJQ	SILVER (47)	AG-111
AAJR	SODIUM (11)	NA-22
AAJS	SODIUM (11)	NA-24
AAJW	STRONTIUM (38)	SR-85
AAJT	STRONTIUM (38)	SR-85M
AAJX	STRONTIUM (38)	SR-89
AAJY	STRONTIUM (38)	SR-90
AAJZ	STRONTIUM (38)	SR-91
AAKA	STRONTIUM (38)	SR-92
AAKB	SULPHUR (16)	S-35
AAKC	TANTALUM (73)	TA-182
AAKE	TECHNETIUM (43)	TC-96
AAKD	TECHNETIUM (43)	TC-96M
AAKG	TECHNETIUM (43)	TC-97
AAKF	TECHNETIUM (43)	TC-97M
AAKJ	TECHNETIUM (43)	TC-99
AAKH	TECHNETIUM (43)	TC-99M
AAKK	TELLURIUM (52)	TE-125M
AAKM	TELLURIUM (52)	TE-127
AAKL	TELLURIUM (52)	TE-127M
AAKP	TELLURIUM (52)	TE-129
AAKN	TELLURIUM (52)	TE-129M
AAKQ	TELLURIUM (52)	TE-131M
AAKR	TELLURIUM (52)	TE-132
AAKS	TERBIUM (65)	TB-160
AAKT	THALLIUM (81)	TL-200
AAKW	THALLIUM (81)	TL-201
AAKX	THALLIUM (81)	TL-202
AAKY	THALLIUM (81)	TL-204
AALF	THORIUM (90)	TH-NATURAL
AAKZ	THORIUM (90)	TH-227
AALA	THORIUM (90)	TH-228
AALB	THORIUM (90)	TH-230
AALC	THORIUM (90)	TH-231
AALD	THORIUM (90)	TH-232
AALE	THORIUM (90)	TH-234
AALG	THULIUM (69)	TM-168
AALH	THULIUM (69)	TM-170
AALJ	THULIUM (69)	TM-171
AALK	TIN (50)	SN-113
AALL	TIN (50)	SN-117M
AALM	TIN (50)	SN-121
AALN	TIN (50)	SN-125
AALP	TRITIUM (1)	H-3

REPLY CODE	REPLY (AN55)	RADIONUCLIDES
AALQ	TRITIUM (1)	H-3 AS GAS, LUMINOUS PAINT, OR ADSORBED ON SOLID MATERIAL
AALR	TUNGSTEN (74)	W-181
AALS	TUNGSTEN (74)	W-185
AALT	TUNGSTEN (74)	W-187
AAMF	URANIUM (92)	U-DEPLETED
AAME	URANIUM (92)	U-ENRICHED
AAMD	URANIUM (92)	U-NATURAL
AALW	URANIUM (92)	U-230
AALX	URANIUM (92)	U-232
AALY	URANIUM (92)	U-233
AALZ	URANIUM (92)	U-234
AAMA	URANIUM (92)	U-235
AAMB	URANIUM (92)	U-236
AAMC	URANIUM (92)	U-238
AAMG	VANADIUM (23)	V-48
AAMH	VANADIUM (23)	V-49
AAMJ	XENON (54)	XE-125
AAMK	XENON (54)	XE-131M
AAML	XENON (54)	XE-131M, UNCOMPRESSED
AAMM	XENON (54)	XE-133
AAMN	XENON (54)	XE-133, UNCOMPRESSED
AAMP	XENON (54)	XE-135
AAMQ	XENON (54)	XE-135, UNCOMPRESSED
AAMR	YTTERBIUM (70)	YB-175
AAMS	YTTRIUM (39)	Y-88
AAMT	YTTRIUM (39)	Y-90
AAMX	YTTRIUM (39)	Y-91
AAMW	YTTRIUM (39)	Y-91M
AAMY	YTTRIUM (39)	Y-92
AAMZ	YTTRIUM (39)	Y-93
AANA	ZINC (30)	ZN-65
AANC	ZINC (30)	ZN-69
AANB	ZINC (30)	ZN-69M
AAND	ZIRCONIUM (40)	ZR-93
AANE	ZIRCONIUM (40)	ZR-95
AANF	ZIRCONIUM (40)	ZR-97

Reference Drawing Groups

REFERENCE DRAWING GROUPS A AND B Tables 38
REFERENCE DRAWING GROUP A 40
REFERENCE DRAWING GROUP B 41

REFERENCE DRAWING GROUPS A AND B Tables
ANODE, PLATING; ANODE, CORROSION PREVENTIVE

INDEX OF MASTER REQUIREMENT CODES

Enter the applicable Reply Codes from Tables 1 and 2 below, followed by the numeric value. (e.g., AKMKJAA0.250*; AKMKJLA2.5*; AKMKJAB0.250$$JAC0.375*)

REPLY CODE	REPLY (AA05)
A	INCHES
L	MILLIMETERS

REPLY CODE	REPLY (AC20)
A	NOMINAL
B	MINIMUM
C	MAXIMUM

NOTE: STYLES 16 AND 17 MAY BE CAST WITH THE STRAP(S) IN AN UP OR DOWN POSITION.

MRC	Mode Code	Name of Dimension
AAUB	J	HOLE DIAMETER
ABGG	J	RADIUS
ABGL	J	WIDTH
ABKV	J	OUTSIDE DIAMETER
ABNM	J	THICKNESS
ABRF	J	CENTER TO CENTER DISTANCE BETWEEN HOLES
ABRY	J	LENGTH
ADWK	J	MINOR HEIGHT
AJHM	J	HOLE CENTER TO BASE DISTANCE
AKMH	J	CORE DIAMETER
AKMJ	J	CORE LENGTH
AKMK	J	CORE WIDTH
AKML	J	CORE THICKNESS
AKMM	J	CORE HOLE DIAMETER
AKMN	J	DISTANCE FROM TOP OF ANODE TO TOP OF STRAP
AKMP	J	DISTANCE FROM EDGE TO CENTER OF CORE HOLE
AKMQ	J	DISTANCE FROM EDGE TO CENTER OF FIRST HOLE
AKMR	J	DISTANCE FROM EDGE TO CENTER OF SECOND HOLE

MRC	Mode Code	Name of Dimension
AKMS	J	DISTANCE FROM EDGE TO CENTER OF THIRD HOLE
AKMT	J	DISTANCE FROM EDGE TO CENTER OF FOURTH HOLE

Enter the numeric value. (e.g., ADVRB30.0*)

MRC	Mode Code	Name of Dimension
ADVR	B	ANGLE IN DEG

REFERENCE DRAWING GROUP A

ANODE, PLATING

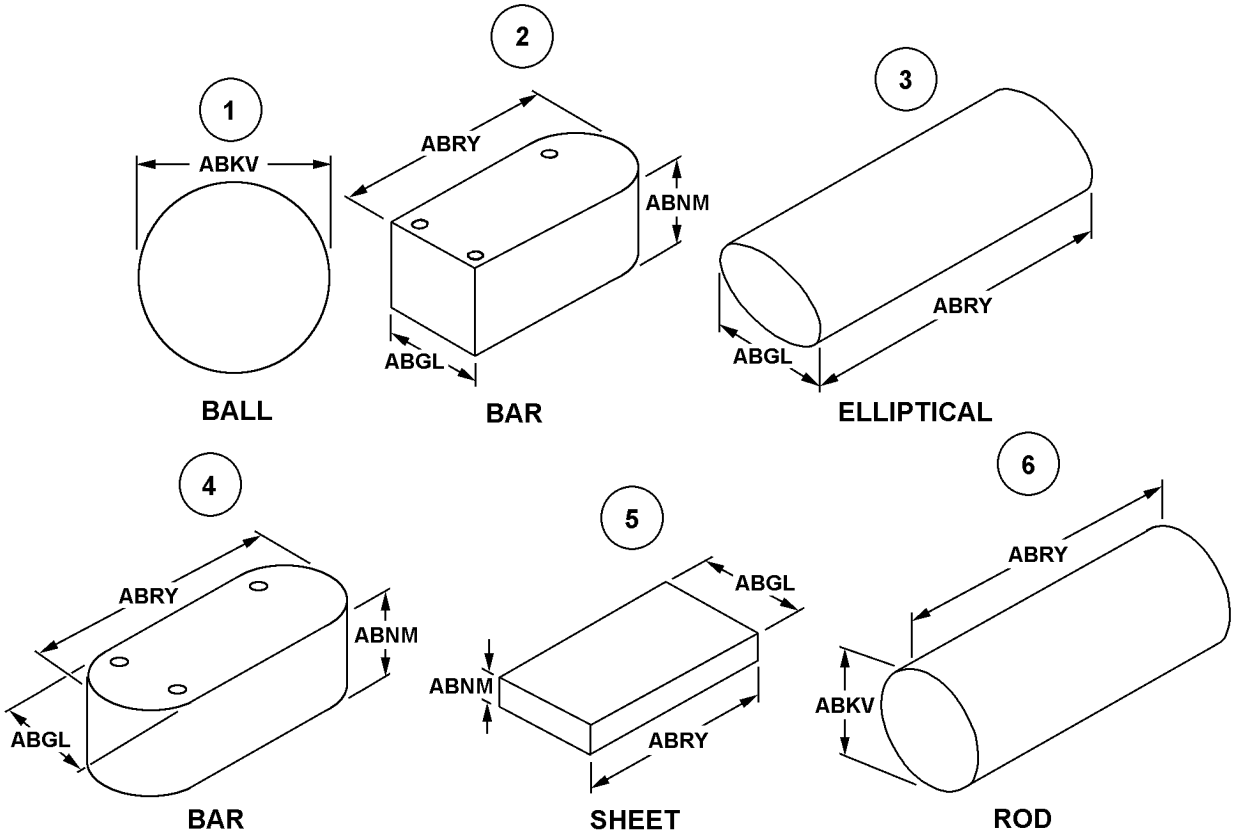

REFERENCE DRAWING GROUP B

ANODE, CORROSION PREVENTIVE

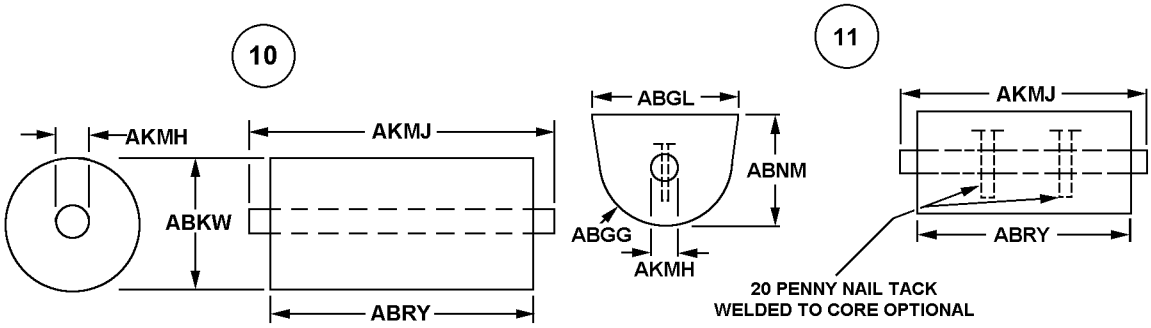

ROUND SECTION W/ PIPE CORE

"D" SECTION W/ PIPE CORE

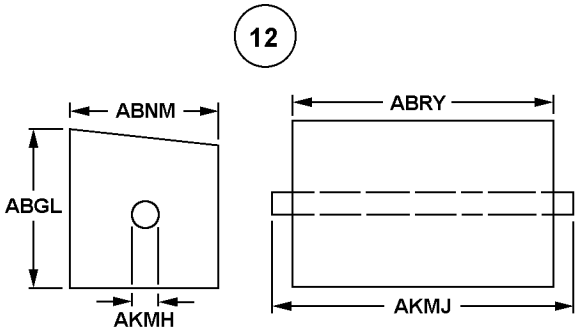

SQUARE SECTION W/ PIPE CORE

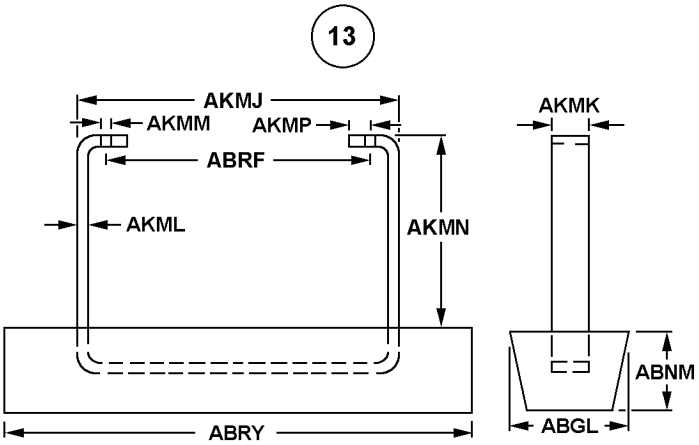

TANKER TYPE W/ STRAP CORE

14

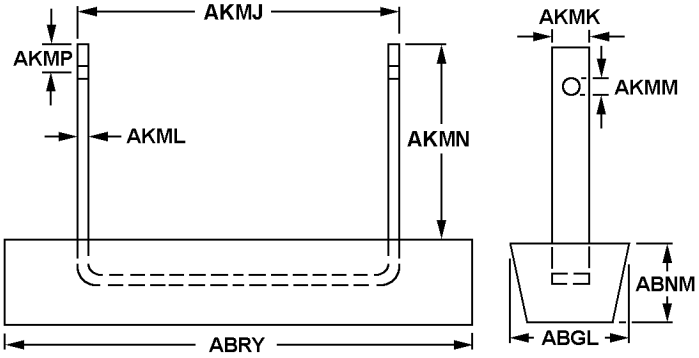

TANKER TYPE W/ STRAP CORE

16

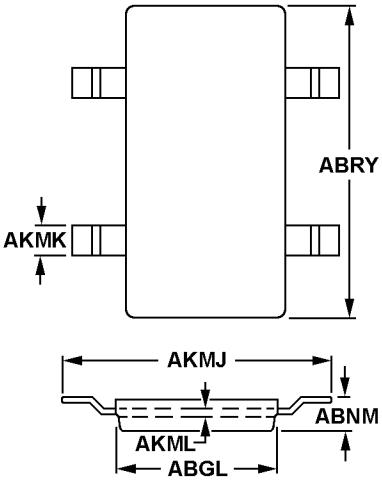

HULL SLAB W/ STRAP CORE

15

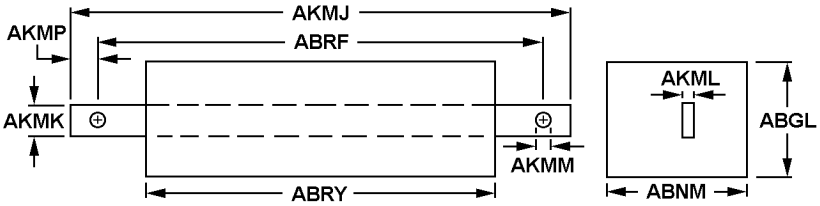

TANKER TYPE W/ STRAP CORE

17

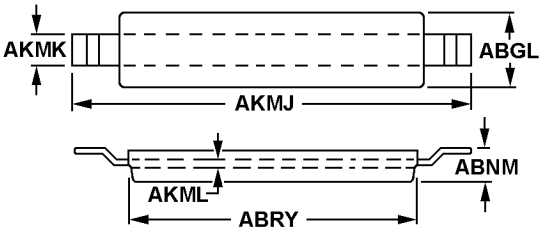

SLAB TYPE W/ STRAP CORE

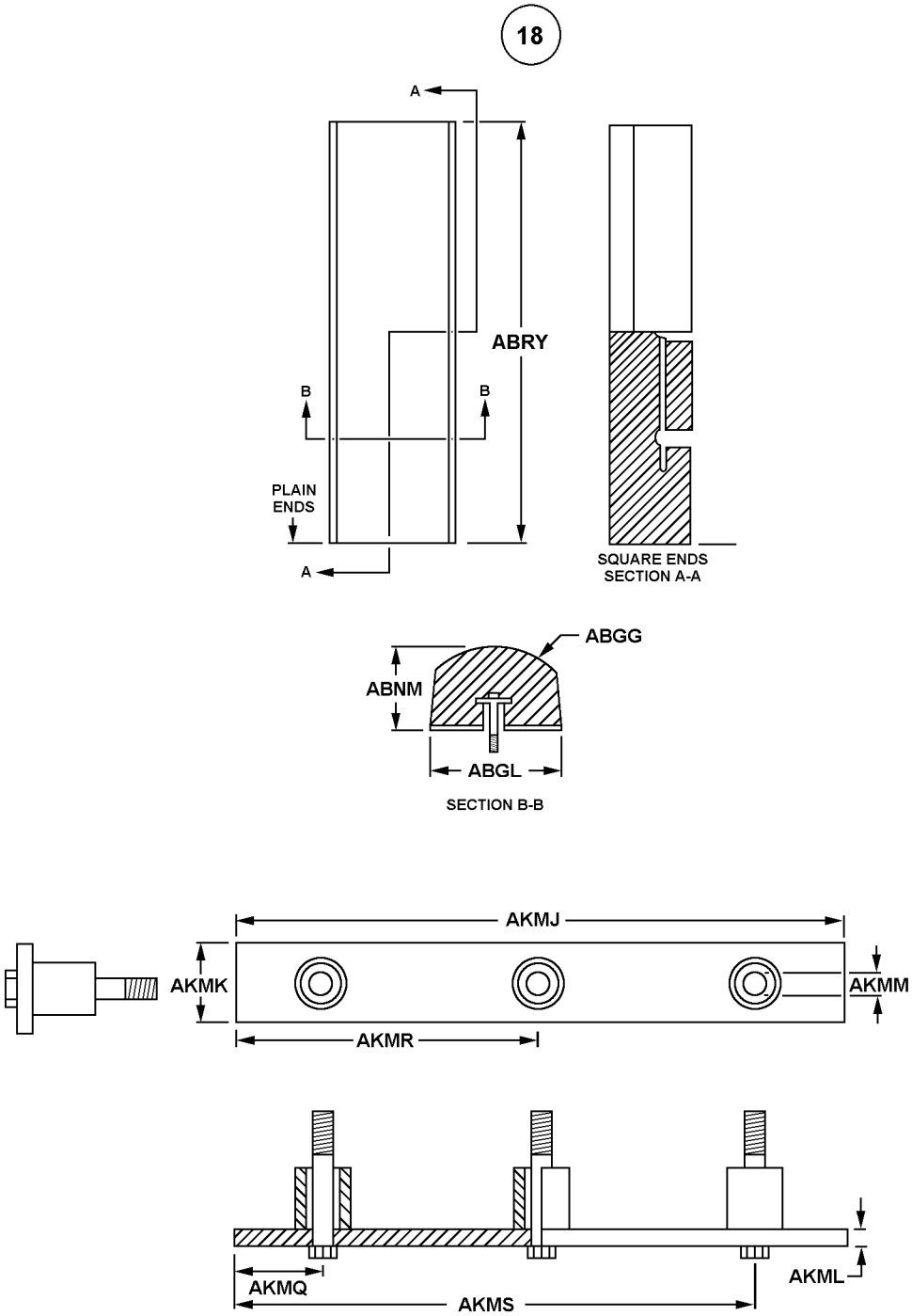

HULL TYPE STRAP CORE

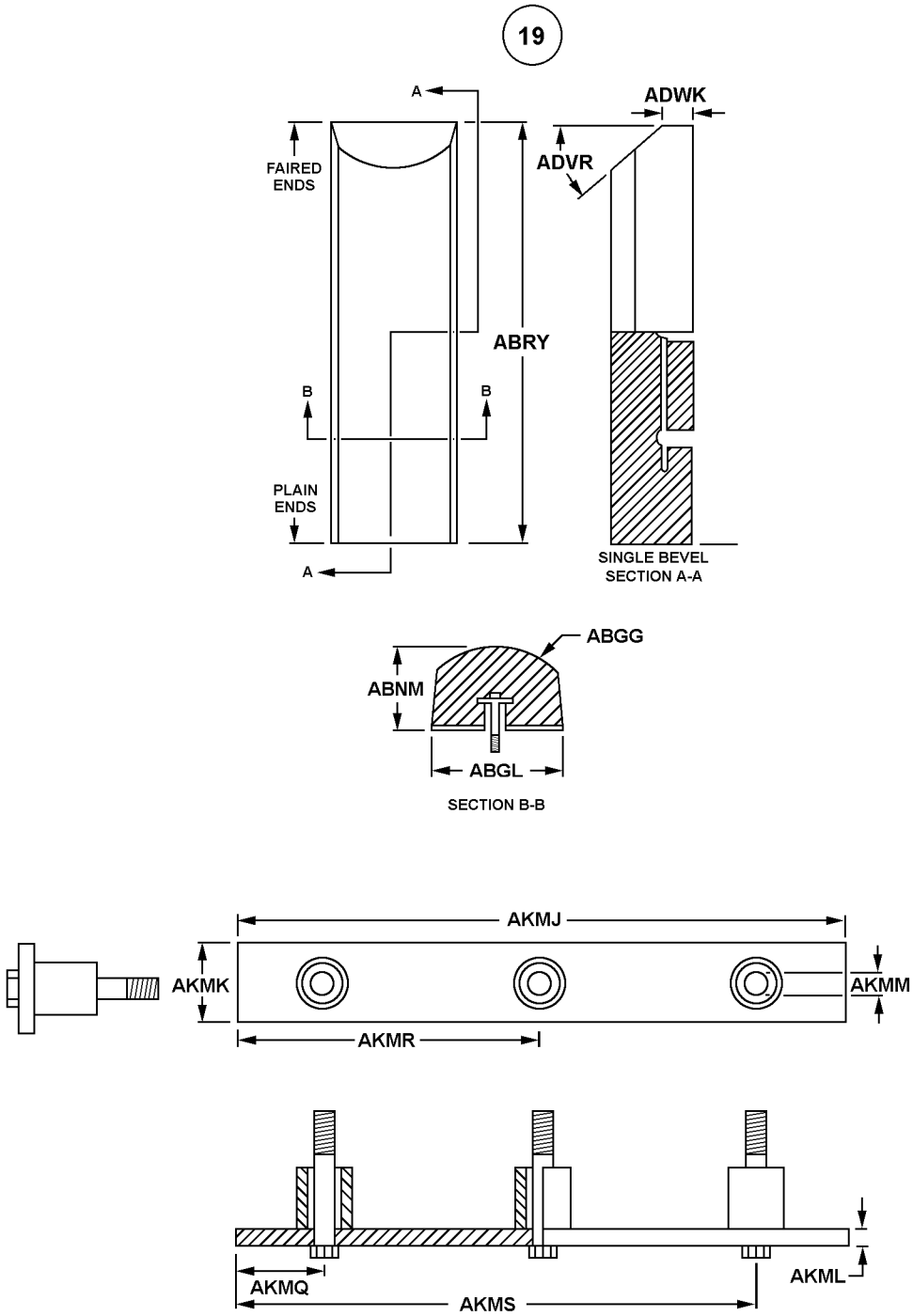

HULL TYPE STRAP CORE

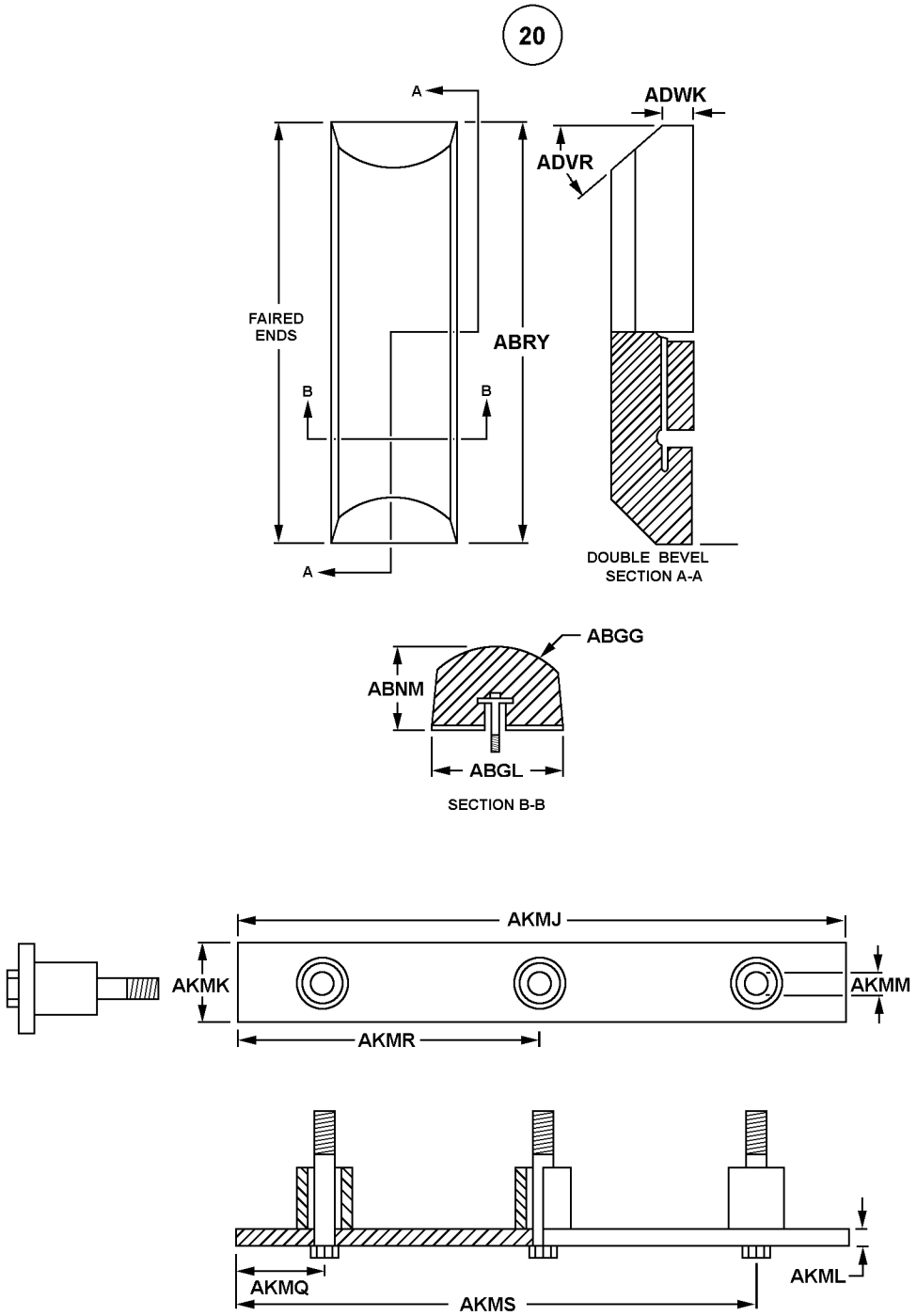

HULL TYPE STRAP CORE

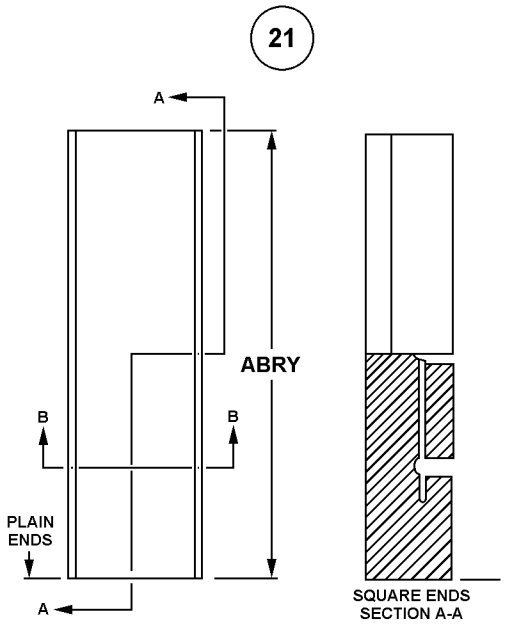

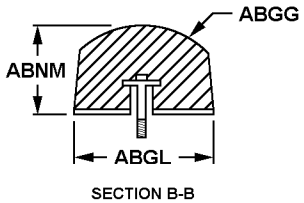

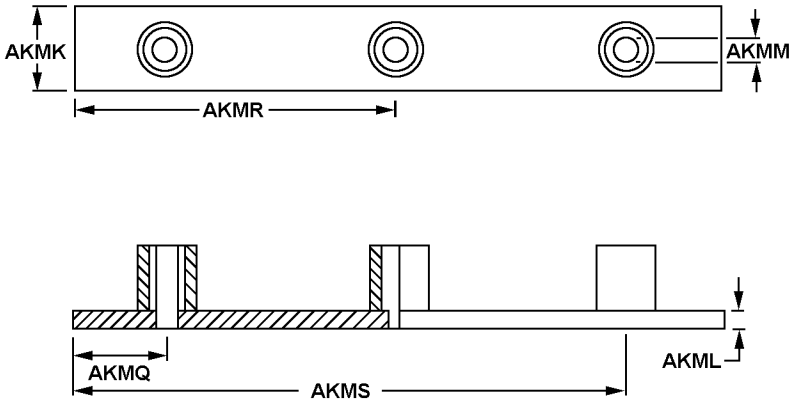

HULL TYPE STRAP CORE

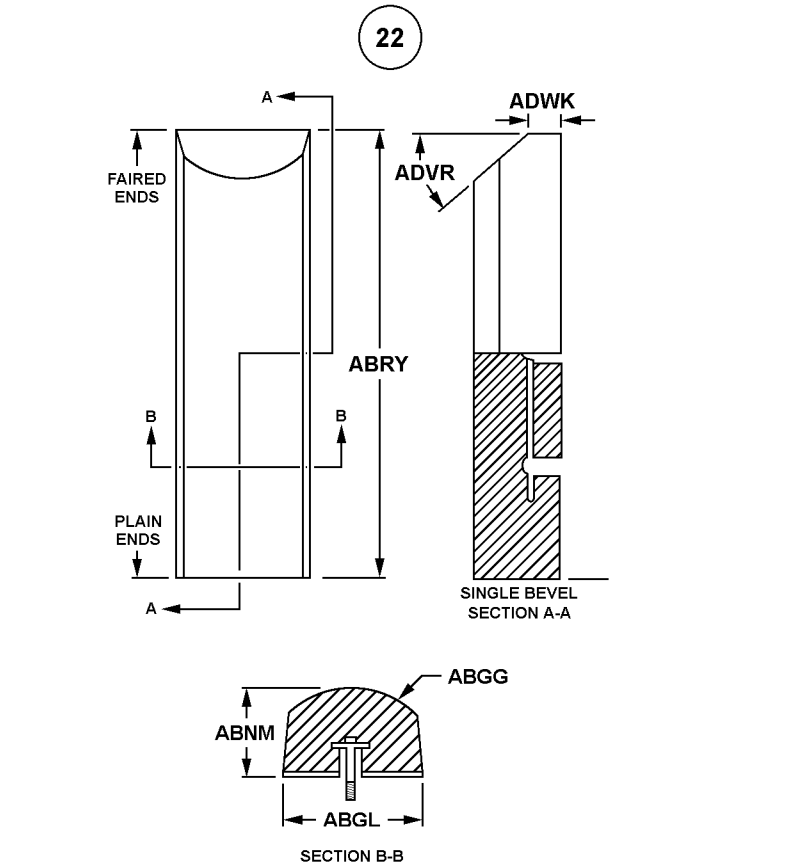

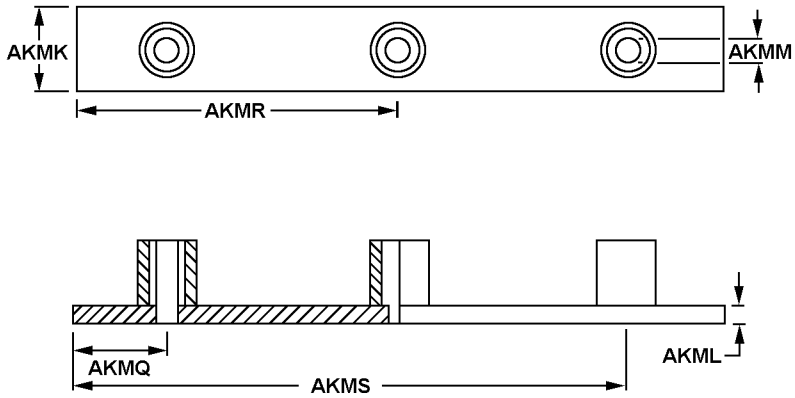

HULL TYPE STRAP CORE

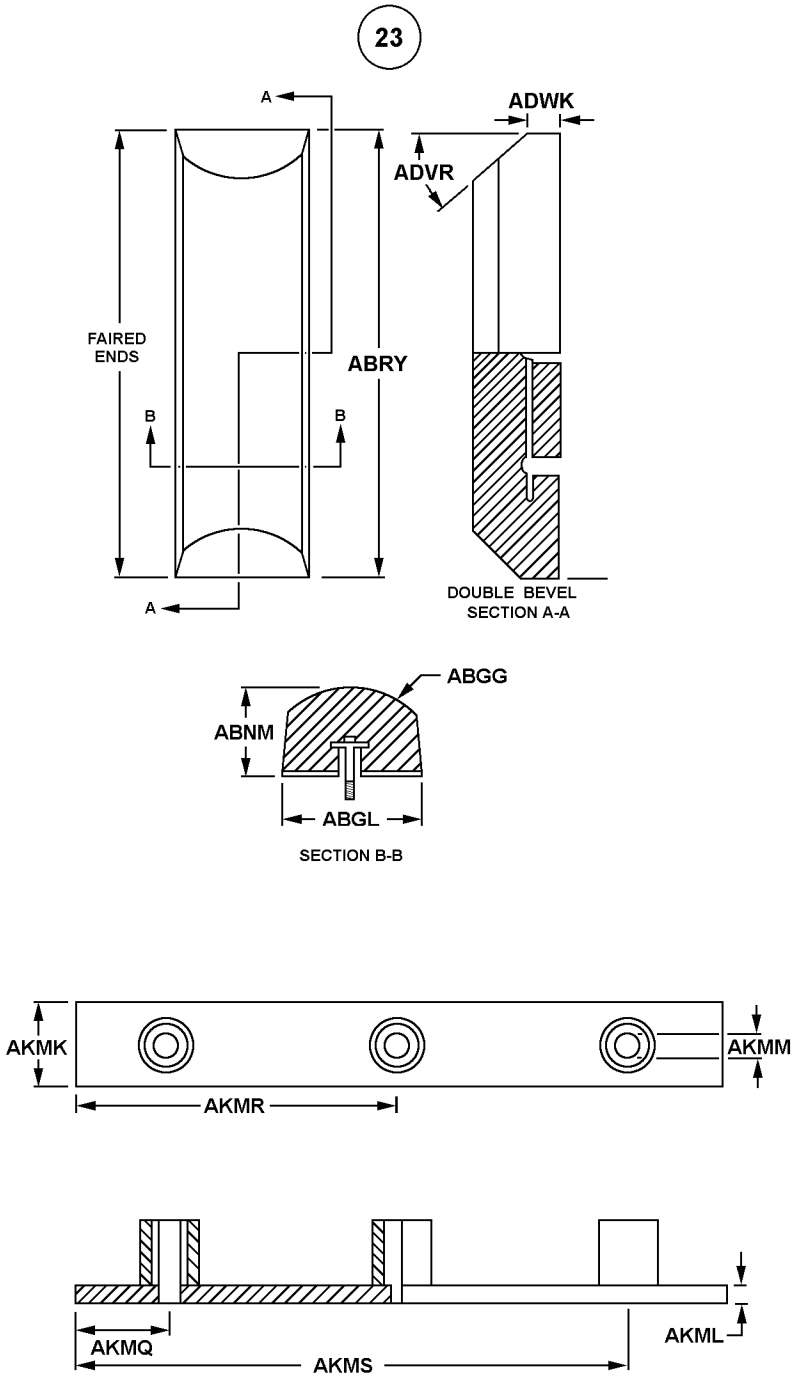

HULL TYPE STRAP CORE

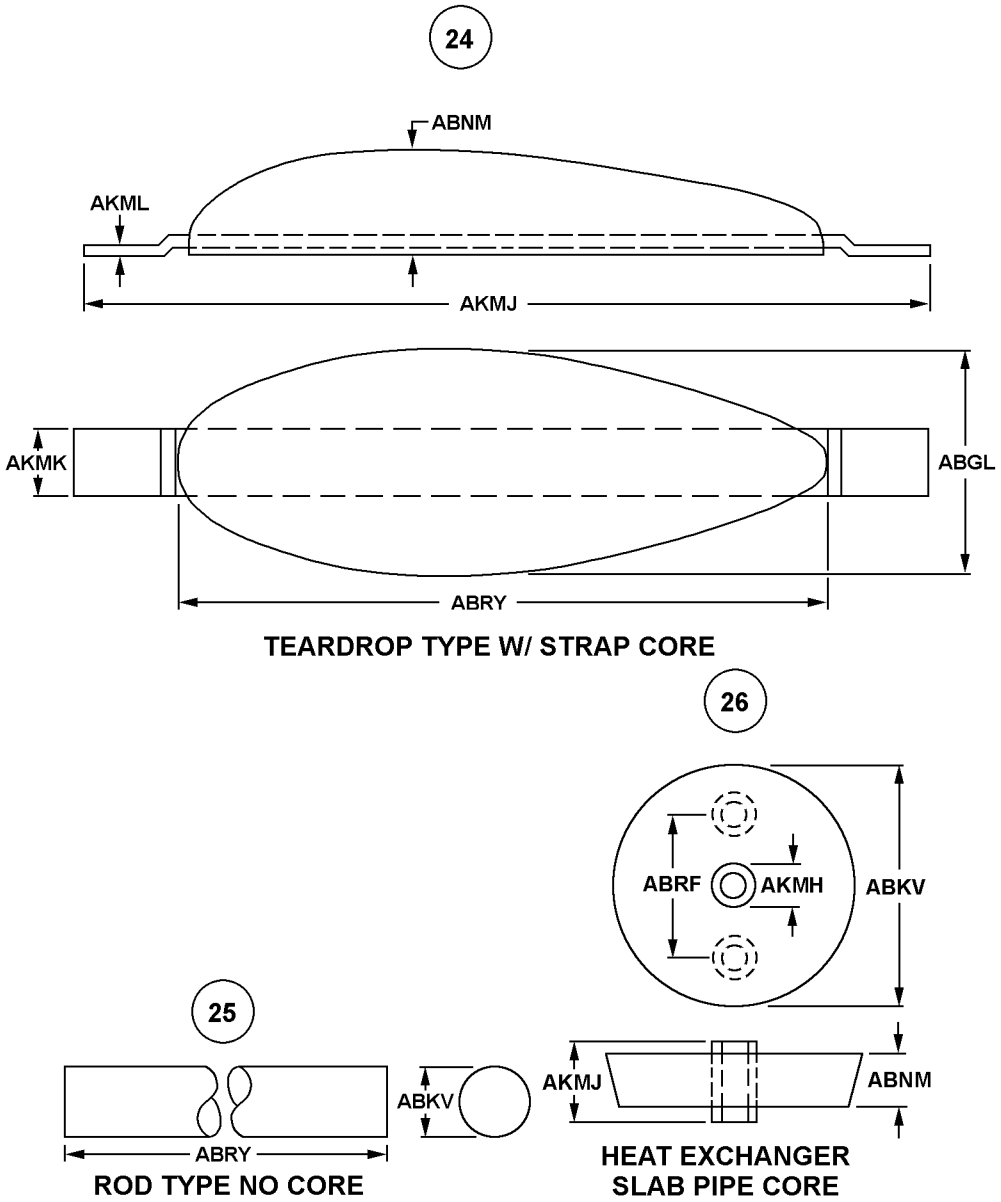
24
ABNM
AKML
AKMJ
AKMK
ABGL
ABRY
TEARDROP TYPE W/ STRAP CORE
26
ABRF
AKMH
ABKV
25
ABKV
ABRY
ROD TYPE NO CORE
AKMJ
ABNM
HEAT EXCHANGER
SLAB PIPE CORE

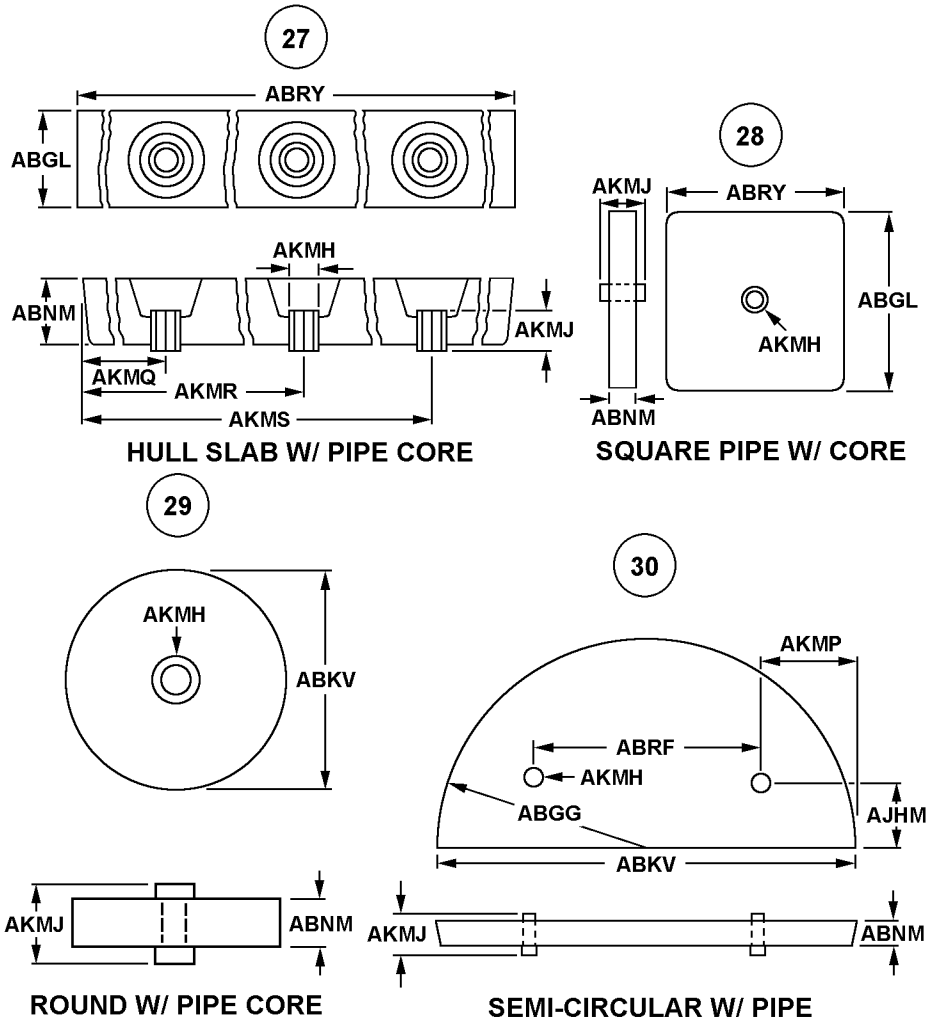
27
ABRY
ABGL
AKMH
ABNM
AKMJ
AKMQ
AKMR
AKMS
HULL SLAB W/ PIPE CORE
28
AKMJ
ABRY
ABGL
AKMH
ABNM
SQUARE PIPE W/ CORE
29
AKMH
ABKV
AKMJ
ABNM
ROUND W/ PIPE CORE
30
AKMP
ABRF
AKMH
ABGG
AJHM
ABKV
AKMJ
ABNM
SEMI-CIRCULAR W/ PIPE

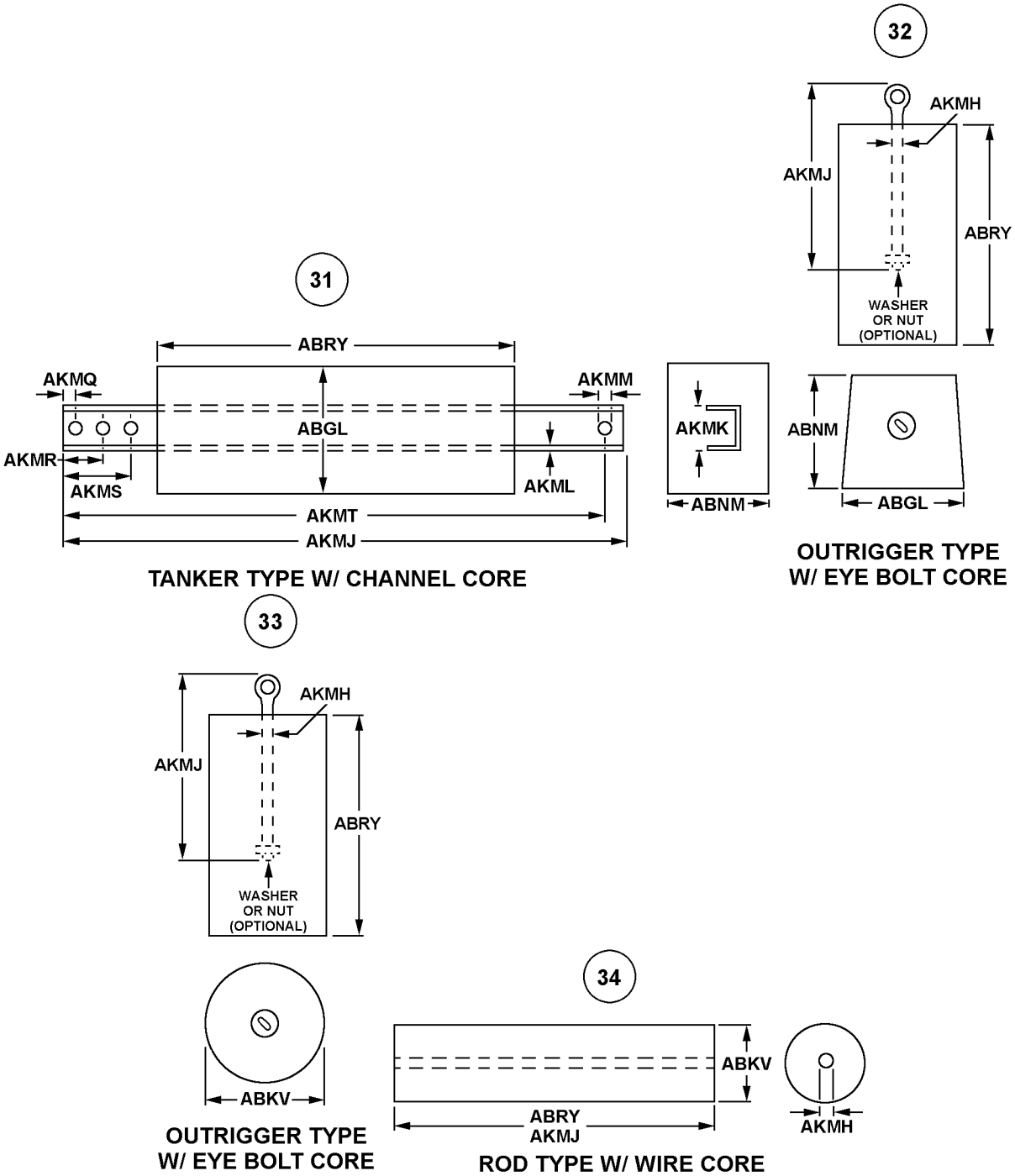
32
AKMH
AKMJ
ABRY
WASHER
OR NUT
(OPTIONAL)
31
ABRY
AKMQ
AKMM
ABGL
AKMR
AKMS
AKML
AKMT
AKMJ
TANKER TYPE W/ CHANNEL CORE
AKMK
ABNM
ABNM
ABGL
OUTRIGGER TYPE
W/ EYE BOLT CORE
33
AKMH
AKMJ
ABRY
WASHER
OR NUT
(OPTIONAL)
ABKV
OUTRIGGER TYPE
W/ EYE BOLT CORE
34
ABKV
ABRY
AKMJ
AKMH
ROD TYPE W/ WIRE CORE

35

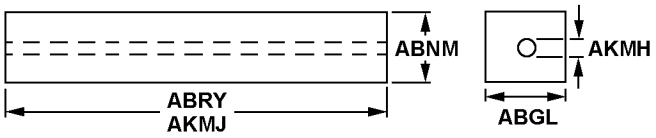

STRIP TYPE WIRE CORE

36

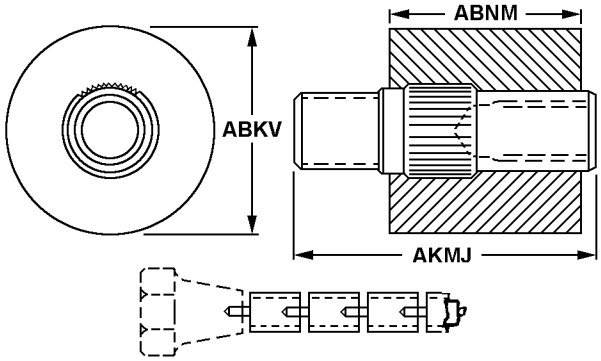

SEGMENTED DISC-MACHINE FORMED INTERLOCKING CORE

37

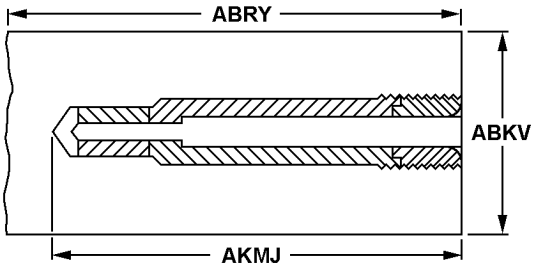

ROD IMPREGNATED

38

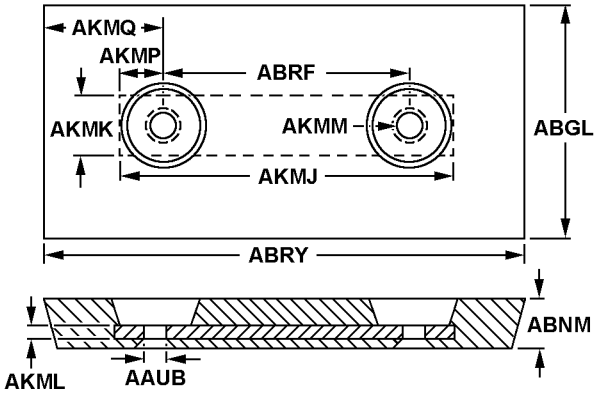

HULL SLAB STRAP CORE

39

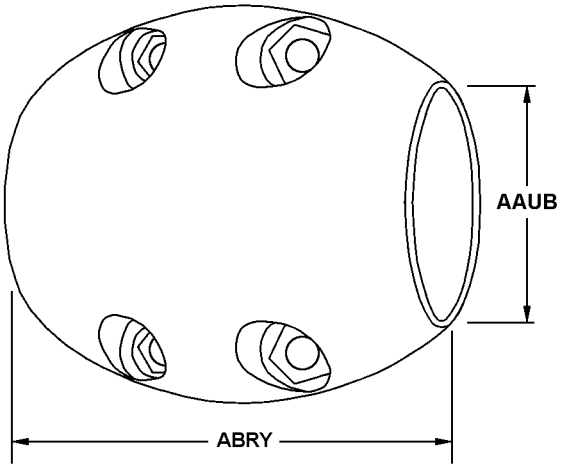

COLLAR

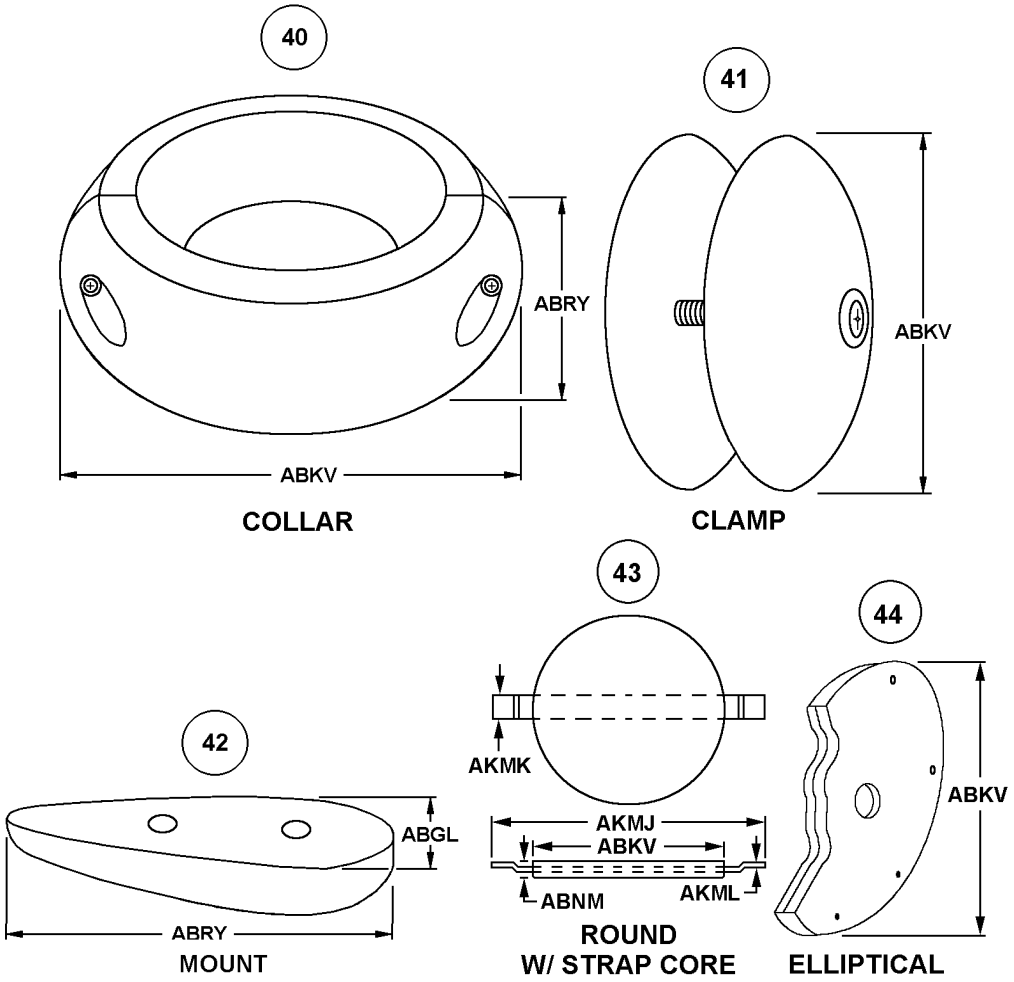
40
ABRY
ABKV
COLLAR
41
ABKV
CLAMP
43
AKMK
AKMJ
ABKV
ABNM
AKML
ROUND
W/ STRAP CORE
44
ABKV
ELLIPTICAL
42
ABGL
ABRY
MOUNT

Technical Data Tables

STANDARD SCREW THREAD CHART 55
STANDARD FRACTION TO DECIMAL CONVERSION CHART 83
AMERICAN STANDARD TAPER PIPE THREADS 84

STANDARD SCREW THREAD CHART

Nominal size and threads per inch	Series designation	Class	External	Class	Internal		
Pitch Diameter	Pitch Diameter						
Max. in.	Min. in.	Max. in.	Min. in.				
0.80 OR	UNF	2A	0.0514	0.0496	2B	0.0519	0.0542
.060-80		3A	.0519	.0506	3B	.0519	.0536
1-64 OR	UNC	2A	.0623	.0603	2B	.0629	.0655
.073-64		3A	.0629	.0614	3B	.0629	.0618
1-72 OR	UNF	2A	.0634	.0615	2B	.0640	.0665
.073-72		3A	.0640	.0626	3B	.0640	.0659
2-56 OR	UNC	2A	.0738	.0717	2B	.0744	.0772
.086-56		3A	.0744	.0728	3B	.0744	.0765
2-64 OR	UNF	2A	.0753	.0733	2B	.0759	.0786
.086-64		3A	.0759	.0744	3B	.0759	.0779
3-48 OR	UNC	2A	.0818	.0825	2B	.0855	.0885
.099-48		3A	.0855	.0838	3B	.0855	.0877
3-56 OR	UNF	2A	.0867	.0845	2B	.0874	.0902
.099-56		3A	.0874	.0858	3B	.0874	.0895
4-40 OR	UNC	2A	.0950	.0925	2B	.0958	.0991
.112-40		3A	.0958	.0939	3B	.0958	.0982
4-48 OR	UNF	2A	.0978	.0954	2B	.0985	.1016
.112-48		3A	.0985	.0967	3B	.0985	.1008
5-40 OR	UNC	2A	.1080	.1054	2B	.1088	.1121
.125-40		3A	.1088	.1069	3B	.1088	.1113
5-44 OR	UNF	2A	.1095	.1070	2B	.1102	.1134
.125-44		3A	.1102	.1083	3B	.1102	.1126

Nominal size and threads per inch	Series designation	Class	External	Class	Internal		
Pitch Diameter	Pitch Diameter						
Max. in.	Min. in.	Max. in.	Min. in.				
6-32 OR	UNC	2A	.1169	.1141	2B	.1177	.1214
.138-32		3A	.1177	.1156	3B	.1177	.1204
6-40 OR	UNF	2A	.1210	.1184	2B	.1218	.1252
.138-40		3A	.1218	.1198	3B	.1218	.1243
8-32 OR	UNC	2A	.1428	.1399	2B	.1437	.1475
.164-32		3A	.1437	.1415	3B	.1437	.1465
8-36 OR	UNF	2A	.1452	.1424	2B	.1460	.1496
.164-36		3A	.1460	.1439	3B	.1460	.1487
10-24 OR	UNC	2A	.1619	.1586	2B	.1629	.1672
.190-24		3A	.1629	.1604	3B	.1629	.1661
10-32 OR	UNF	2A	.1688	.1658	2B	.1697	.1736
.190-32		3A	.1697	.1674	3B	.1697	.1726
12-24 OR	UNC	2A	.1879	.1845	2B	.1889	.1933
.216-24		3A	.1889	.1863	3B	.1889	.1922
12-28 OR	UNF	2A	.1918	.1886	2B	.1928	.1970
.216-28		3A	.1928	.1904	3B	.1928	.1959
12-32 OR	UNEF	2A	.1948	.1917	2B	.1957	.1998
.216-32		3A	.1957	.1933	3B	.1957	.1988
1/4-20 OR		1A	.2164	.2108	1B	.2175	.2248
.250-20	UNC	2A	.2164	.2127	2B	.2175	.2224
		3A	.2175	.2147	3B	.2175	.2211
1/4-28 OR		1A	.2258	.2208	1B	.2268	.2333
.250-28	UNF	2A	.2258	.2225	2B	.2268	.2311
		3A	.2268	.2243	3B	.2268	.2300
1/4-32 OR	UNEF	2A	.2287	.2255	2B	.2297	.2339

Nominal size and threads per inch	Series designation	Class	External	Class	Internal		
Pitch Diameter	Pitch Diameter						
Max. in.	Min. in.	Max. in.	Min. in.				
.250-32		3A	.2297	.2273	3B	.2297	.2328
5/16-18 OR		1A	.2752	.2691	1B	.2764	.2843
.3125-18	UNC	2A	.2752	.2712	2B	.2764	.2817
		3A	.2764	.2734	3B	.2764	.2803
5/16-20 OR	UN	2A	.2788	.2748	2B	.2800	.2852
.3125-20		3A	.2800	.2770	3B	.2800	.2839
5/16-24 OR		1A	.2843	.2788	1B	.2854	.2925
.3125-24	UNF	2A	.2843	.2806	2B	.2854	.2902
		3A	.2854	.2827	3B	.2854	.2890
5/16-28 OR	UN	2A	.2883	.2849	2B	.2893	.2937
.3125-28		3A	.2893	.2867	3B	.2893	.2926
5/16-32 OR	UNEF	2A	.2912	.2880	2B	.2922	.2964
.3125-32		3A	.2922	.2898	3B	.2922	.2953
3/8-16 OR		1A	.3331	.3266	1B	.3344	.3429
.375-16	UNC	2A	.3331	.3287	2B	.3344	.3401
		3A	.3344	.3311	3B	.3344	.3387
3/8-20 OR	UN	2A	.3413	.3372	2B	.3425	.3479
.375-20		3A	.3425	.3394	3B	.3425	.3465
3/8-24 OR		1A	.3468	.3411	1B	.3479	.3553
.375-24	UNF	2A	.3468	.3430	2B	.3479	.3528
		3A	.3479	.3450	3B	.3479	.3516
3/8-28 OR	UN	2A	.3507	.3471	2B	.3518	.3564
.375-28		3A	.3518	.3491	3B	.3518	.3553
3/8-32 OR	UNEF	2A	.3537	.3503	2B	.3547	.3591
.375-32		3A	.3547	.3522	3B	.3547	.3580

Nominal size and threads per inch	Series designation	Class	External	Class	Internal		
Pitch Diameter	Pitch Diameter						
Max. in.	Min. in.	Max. in.	Min. in.				
7/16-14 OR		1A	.3897	.3826	1B	.3911	.4003
.4375-14	UNC	2A	.3897	.3850	2B	.3911	.3972
		3A	.3911	.3876	3B	.3911	.3957
7/16-16 OR	UN	2A	.3955	.3909	2B	.3969	.4028
.4375-16		3A	.3969	.3935	3B	.3969	.4014
7/16-20 OR		1A	.4037	.3974	1B	.4050	.4131
.4375-20	UNF	2A	.4037	.3995	2B	.4050	.4104
		3A	.4050	.4019	3B	.4050	.4091
7/16-28 OR	UNEF	2A	.4132	.4096	2B	.4143	.4189
.4375-28		3A	.4143	.4116	3B	.4143	.4178
7/16-32 OR	UN	2A	.4162	.4128	2B	.4172	.4216
.4375-32		3A	.4172	.4147	3B	.4172	.4205
1/2-13 OR		1A	.4485	.4411	1B	.4500	.4597
.500-13	UNC	2A	.4485	.4435	2B	.4500	.4565
		3A	.4500	.4463	3B	.4500	.4548
1/2-16 OR	UN	2A	.4580	.4533	2B	.4594	.4655
.500-16		3A	.4594	.4550	3B	.4594	.4640
1/2-20 OR		1A	.4662	.4598	1B	.4675	.4759
.500-20	UNF	2A	.4662	.4619	2B	.4675	.4731
		3A	.4675	.4643	3B	.4675	.4717
1/2-28 OR	UNEF	2A	.4757	.4720	2B	.4768	.4816
.500-28		3A	.4768	.4740	3B	.4768	.4804
1/2-32 OR	UN	2A	.4787	.4752	2B	.4797	.4842
.500-32		3A	.4797	.4771	3B	.4797	.4831
9/16-12 OR		1A	.5068	.4900	1B	.5084	.5186
.5625-12	UNC	2A	.5068	.5016	2B	.5084	.5152

Nominal size and threads per inch	Series designation	Class	External	Class	Internal		
Pitch Diameter	Pitch Diameter						
Max. in.	Min. in.	Max. in.	Min. in.				
		3A	.5084	.5045	3B	.5084	.5135
9/16-16 OR	UN	2A	.5205	.5158	2B	.5219	.5280
.5625-16		3A	.5219	.5184	3B	.5219	.5265
9/16-18 OR		1A	.5250	.5182	1B	.5264	.5353
.5625-18	UNF	2A	.5250	.5205	2B	.5264	.5323
		3A	.5264	.5230	3B	.5264	.5308
9/16-20 OR	UN	2A	.5287	.5245	2B	.5300	.5355
.5625-20		3A	.5300	.5268	3B	.5300	.5341
9/16-24 OR	UNEF	2A	.5342	.5303	2B	.5354	.5405
.5625-24		3A	.5354	.5325	3B	.5354	.5392
9/16-28 OR	UN	2A	.5382	.5345	2B	.5393	.5441
.5625-28		3A	.5393	.5365	3B	.5393	.5429
9/16-32 OR	UN	2A	.5412	.5377	2B	.5422	.5467
.5625-32		3A	.5422	.5396	3B	.5422	.5456
5/8-11 OR		1A	.5644	.5561	1B	.5660	.5767
.625-11	UNC	2A	.5644	.5589	2B	.5660	.5732
		3A	.5660	.5619	3B	.5660	.5714
5/8-12 OR	UN	2A	.5603	.5639	2B	.5709	.5780
.625-12		3A	.5709	.5668	3B	.5709	.5762
5/8-16 OR	UN	2A	.5830	.5782	2B	.5844	.5906
.625-16		3A	.5844	.5808	3B	.5844	.5890
5/8-18 OR		1A	.5875	.5805	1B	.5889	.5980
.625-18	UNF	2A	.5875	.5828	2B	.5889	.5949
		3A	.5889	.5854	3B	.5889	.5934
5/8-20 OR	UN	2A	.5912	.5869	2B	.5925	.5981

Nominal size and threads per inch	Series designation	Class	External	Class	Internal		
Pitch Diameter	Pitch Diameter						
Max. in.	Min. in.	Max. in.	Min. in.				
.625-20		3A	.5925	.5893	3B	.5925	.5967
5/8-24 OR	UNEF	2A	.5967	.5927	2B	.5979	.6031
.625-24		3A	.5979	.5949	3B	.5979	.6018
5/8-28 OR	UN	2A	.6007	.5969	2B	.6018	.6067
.625-28		3A	.6018	.5990	3B	.6018	.6055
5/8-32 OR	UN	2A	.6036	.6000	2B	.6047	.6093
.625-32		3A	.6047	.6020	3B	.6047	.6082
11/16-12 OR	UN	2A	.6318	.6264	2B	.6334	.6405
.6875-12		3A	.6334	.6293	3B	.6334	.6387
11/16-16 OR	UN	2A	.6455	.6407	2B	.6469	.6531
.6875-16		3A	.6469	.6433	3B	.6469	.6515
11/16-20 OR	UN	2A	.6537	.6494	2B	.6550	.6606
.6875-20		3A	.6550	.6518	3B	.6550	.6592
11/16-24 OR	UNEF	2A	.6592	.6552	2B	.6604	.6656
.6875-24		3A	.6604	.6674	3B	.6604	.6643
11/16-28 OR	UN	2A	.6632	.6594	2B	.6643	.6692
.6875-28		3A	.6643	.6615	3B	.6643	.6680
11/16-32 OR	UN	2A	.6661	.6625	2B	.6672	.6718
.6875-32		3A	.6672	.6645	3B	.6672	.6707
3/4-10 OR		1A	.6830	.6744	1B	.6850	.6965
.750-10	UNC	2A	.6832	.6773	2B	.6850	.6927
		3A	.6850	.6806	3B	.6850	.6907
3/4-12 OR	UN	2A	.6942	.6887	2B	.6959	.7031
.750-12		3A	.6959	.6918	3B	.6959	.7013

Nominal size and threads per inch	Series designation	Class	External	Class	Internal		
Pitch Diameter	Pitch Diameter						
Max. in.	Min. in.	Max. in.	Min. in.				
3/4-16 OR		1A	.7079	.7004	1B	.7094	.7192
.750-16	UNF	2A	.7079	.7029	2B	.7094	.7159
		3A	.7094	.7056	3B	.7094	.7143
3/4-20 OR	UNEF	2A	.7162	.7118	2B	.7175	.7232
.750-20		3A	.7175	.7142	3B	.7175	.7218
3/4-28 OR	UN	2A	.7256	.7218	2B	.7268	.7318
750-28		3A	.7268	.7239	3B	.7268	.7305
3/4-32 OR	UN	2A	.7286	.7250	2B	.7297	.7344
.750-32		3A	.7297	.7270	3B	.7297	.7333
13/16-12 OR	UN	2A	.7567	.7512	2B	.7584	.7656
.8125-12		3A	.7584	.7543	3B	.7584	.7638
13/16-16 OR	UN	2A	.7704	.7655	2B	.7719	.7782
.8125-16		3A	.7719	.7683	3B	.7719	.7766
13/16-20 OR	UNEF	2A	.7787	.7743	2B	.7800	.7857
.8125-20		3A	.7800	.7767	3B	.7800	.7843
13/16-28 OR	UN	2A	.7881	.7843	2B	.7893	.7943
.8125-28		3A	.7893	.7864	3B	.7893	.7930
13/16-32 OR	UN	2A	.7911	.7875	2B	.7922	.7969
.8125-32		3A	.7922	.7895	3B	.7922	.7958
7/8 OR		1A	.8009	.7914	1B	.8028	.8151
.875-9	UNC	2A	.8009	.7946	2B	.8028	.8110
		3A	.8028	.7981	3B	.8028	.8089
7/8-12 OR	UN	2A	.8192	.8137	2B	.8209	.8281
.875-12		3A	.8209	.8168	3B	.8209	.8263
7/8-14 OR		1A	.8270	.8189	1B	.8286	.8392

Nominal size and threads per inch	Series designation	Class	External	Class	Internal		
Pitch Diameter	Pitch Diameter						
Max. in.	Min. in.	Max. in.	Min. in.				
.875-14	UNF	2A	.8270	.8216	2B	.8286	.8356
		3A	.8286	.8245	3B	.8286	.8339
7/8-16 OR	UN	2A	.8329	.8280	2B	.8344	.8407
.875-16		3A	.8344	.8308	3B	.8344	.8391
7/8-20 OR	UNEF	2A	.8412	.8368	2B	.8125	.8482
.875-20		3A	.8125	.8392	3B	.8125	.8168
7/8-28 OR	UN	2A	.8506	.8468	2B	.8518	.8568
.875-28		3A	.8518	.8480	3B	.8518	.8555
7/8-32 OR	UN	2A	.8536	.8500	2B	.8547	.8794
.875-32		3A	.8547	.8520	3B	.8547	.8563
15/16-12 OR	UN	2A	.8817	.8760	2B	.8834	.8908
.9375-12		3A	.8834	.8792	3B	.8834	.8889
15/16-16 OR	UN	2A	.8954	.8904	2B	.8969	.9034
.9375-16		3A	.8969	.8932	3B	.8969	.9018
15/16-20 OR	UNEF	2A	.9036	.8991	2B	.9050	.9409
.9375-20		3A	.9050	.9016	3B	.9050	.9094
15/16-28 OR	UN	2A	.9131	.9091	2B	.9143	.9195
.9375-28		3A	.9143	.9113	3B	.9143	.9182
15/16-32 OR	UN	2A	.9161	.9123	2B	.9172	.9221
.9375-32		3A	.9172	.9144	3B	.9172	.9209
1-8 OR		1A	.9168	.9067	1B	.9188	.9320
1.000-8	UNC	2A	.9168	.9100	2B	.9188	.9276
		3A	.9188	.9137	3B	.9188	.9254
1-12 OR		1A	.9441	.9353	1B	.9459	.9573
1.000-12	UNF	2A	.9441	.9382	2B	.9459	.9535

Nominal size and threads per inch	Series designation	Class	External	Class	Internal		
Pitch Diameter	Pitch Diameter						
Max. in.	Min. in.	Max. in.	Min. in.				
		3A	.9459	.9415	3B	.9459	.9516
1-16 OR	UN	2A	.9579	.9529	2B	.9594	.9659
1.000-16		3A	.9594	.9557	3B	.9594	.9643
1-20 OR	UNEF	2A	.9661	.9616	2B	.9675	.9734
1.000-20		3A	.9675	.9641	3B	.9675	.9719
1-28 OR	UN	2A	.9756	.9716	2B	.9768	.9820
1.000-28		3A	.9768	.9738	3B	.9768	.9807
1-32 OR	UN	2A	.9786	.9748	2B	.9797	.9846
1.000-32		3A	.9797	.9769	3B	.9797	.9834
1-1/16-8 OR	UN	2A	.9793	.9725	2B	.9813	.9902
1.0625-8		3A	.9813	.9762	3B	.9813	.9880
1-1/16-12 OR	UN	2A	1.0067	1.0010	2B	1.0084	1.0158
1.0625-12		3A	1.0084	1.0042	3B	1.0084	1.0139
1-1/16-16 OR	UN	2A	1.0204	1.0454	2B	1.0219	1.0284
1.0625-16		3A	1.0219	1.0182	3B	1.0219	1.0268
1-1/16-18 OR	UNEF	2A	1.0250	1.0203	2B	1.0264	1.0326
1.0625-18		3A	1.0264	1.0228	3B	1.0264	1.0310
1-1/16-20 OR	UN	2A	1.0286	1.0241	2B	1.0300	1.0350
1.0625-20		3A	1.0300	1.0266	3B	1.0300	1.0344
1-1/16-28 OR	UN	2A	1.0381	1.0341	2B	1.0393	1.0445
1.0625-28		3A	1.0393	1.0363	3B	1.0393	1.0432
1-1/8-7 OR		1A	1.0300	1.0191	1B	1.0322	1.0463
1.125-7	UNC	2A	1.0300	1.0228	2B	1.0322	1.0416
		3A	1.0322	1.0268	3B	1.0322	1.0393

Nominal size and threads per inch	Series designation	Class	External	Class	Internal		
Pitch Diameter	Pitch Diameter						
Max. in.	Min. in.	Max. in.	Min. in.				
1-1/8-8 OR	UN	2A	1.0417	1.0348	2B	1.0438	1.0528
1.125-8		3A	1.0438	1.0386	3B	1.0438	1.0505
1-1/8-12 OR		1A	1.0691	1.0601	1B	1.0709	1.0826
1.125-12	UNF	2A	1.0691	1.0631	2B	1.0709	1.0787
		3A	1.0709	1.0664	3B	1.0709	1.0768
1-1/8-16 OR	UN	2A	1.0829	1.0779	2B	1.0844	1.0909
1.125-16		3A	1.0844	1.0807	3B	1.0844	1.0893
1-1/8-18 OR	UNEF	2A	1.0875	1.0828	2B	1.0889	1.0951
1.125-18		3A	1.0889	1.0853	3B	1.0889	1.0935
1-1/8-20 OR	UN	2A	1.0911	1.0866	2B	1.0925	1.0981
1.125-20		3A	1.0925	1.0891	3B	1.0925	1.0969
1-1/8-28 OR	UN	2A	1.1006	1.0966	2B	1.1018	1.1070
1.125-28		3A	1.1018	1.0988	3B	1.1018	1.1057
1-3/16-8 OR	UN	2A	1.1042	1.0972	2B	1.1063	1.1154
1.1875-8		3A	1.1063	1.1011	3B	1.1063	1.1131
1-3/16-12 OR	UN	2A	1.1317	1.1259	2B	1.1334	1.1409
1.1875-12		3A	1.1334	1.1291	3B	1.1334	1.1390
1-3/16-16 OR	UN	2A	1.1454	1.1403	2B	1.1469	1.1535
1.1875-16		3A	1.1469	1.1431	3B	1.1469	1.1519
1-3/16-18 OR	UNEF	2A	1.1499	1.1450	2B	1.1514	1.1577
1.1875-18		3A	1.1514	1.1478	3B	1.1514	1.1561
1-3/16-20 OR	UN	2A	1.1536	1.1489	2B	1.1550	1.1611
1.1875-20		3A	1.1550	1.1515	3B	1.1550	1.1595
1.1875-28		3A	1.1643	1.1642	3B	1.1643	1.1683
1-1/4-7 OR		1A	1.1550	1.1439	1B	1.1572	1.1716

Nominal size and threads per inch	Series designation	Class	External	Class	Internal		
Pitch Diameter	Pitch Diameter						
Max. in.	Min. in.	Max. in.	Min. in.				
1.250-7	UNC	2A	1.1550	1.1476	2B	1.1572	1.1668
		3A	1.1572	1.1517	3B	1.1572	1.1644
1-1/4-8 OR	UN	2A	1.1667	1.1597	2B	1.1688	1.1780
1.250-8		3A	1.1688	1.1635	3B	1.1688	1.1757
1-1/4-12 OR		1A	1.1941	1.1849	1B	1.1959	1.2079
1.250-12	UNF	2A	1.1941	1.1879	2B	1.1959	1.2039
		3A	1.1959	1.1913	3B	1.1959	1.2019
1-1/4-16 OR	UN	2A	1.2079	1.2028	2B	1.2094	1.2160
1.250-16		3A	1.2094	1.2056	3B	1.2094	1.2141
1-1/4-18 OR	UNEF	2A	1.2124	1.2075	2B	1.2139	1.2202
1.250-18		3A	1.2139	1.2103	3B	1.2139	1.2186
1-1/4-20 OR	UN	2A	1.2161	1.2114	2B	1.2175	1.2236
1.250-20		3A	1.2175	1.2140	3B	1.2175	1.2220
1-1/4-28 OR	UN	2A	1.2256	1.2215	2B	1.2268	1.2321
1.250-28		3A	1.2268	1.2237	3B	1.2268	1.2308
1-5/16-8 OR	UN	2A	1.2292	1.2221	2B	1.2313	1.2405
1.3125-8		3A	1.2313	1.2260	3B	1.2313	1.2382
1-5/16-12 OR	UN	2A	1.2567	1.2509	2B	1.2584	1.2659
1.3125-12		3A	1.2584	1.2541	3B	1.2584	1.2640
1-5/16-16 OR	UN	2A	1.2704	1.2653	2B	1.2719	1.2785
1.3125-16		3A	1.2719	1.2681	3B	1.2719	1.2769
1-5/16-18 OR	UNEF	2A	1.2749	1.2700	2B	1.2764	1.2827
1.3125-18		3A	1.2764	1.2728	3B	1.2764	1.2811
1-5/16-20 OR	UN	2A	1.2786	1.2739	2B	1.2800	1.2861
1.3125-20		3A	1.2800	1.2765	3B	1.2800	1.2845

Nominal size and threads per inch	Series designation	Class	External	Class	Internal		
Pitch Diameter	Pitch Diameter						
Max. in.	Min. in.	Max. in.	Min. in.				
1-5/16-28 OR	UN	2A	1.2881	1.2840	2B	1.2893	1.2946
1.3125-28		3A	1.2893	1.2862	3B	1.2893	1.2933
1-3/8-6 OR		1A	1.2643	1.2523	1B	1.2667	1.2822
1.375-6	UNC	2A	1.2643	1.2563	2B	1.2667	1.2771
		3A	1.2667	1.2607	3B	1.2667	1.2745
1-3/8-8 OR	UN	2A	1.2916	1.2844	2B	1.2938	1.3031
1.375-8		3A	1.2938	1.2884	3B	1.2938	1.3008
1-3/8-12 OR		1A	1.3190	1.3096	1B	1.3209	1.3332
1.375-12	UNF	2A	1.3190	1.3127	2B	1.3209	1.3291
		3A	1.3209	1.3162	3B	1.3209	1.3270
1-3/8-16 OR	UN	2A	1.3329	1.3278	2B	1.3344	1.3410
1.375-16		3A	1.3344	1.3306	3B	1.3344	1.3394
1-3/8-18 OR	UNEF	2A	1.3374	1.3325	2B	1.3389	1.3452
1.375-18		3A	1.3389	1.3353	3B	1.3389	1.3436
1-3/8-20 OR	UN	2A	1.3411	1.3364	2B	1.3425	1.3486
1.375-20		3A	1.3425	1.3390	3B	1.3425	1.3470
1-3/8-28 OR	UN	2A	1.3506	1.3465	2B	1.3518	1.3571
1.375-28		3A	1.3518	1.3487	3B	1.3518	1.3558
1-7/16-6 OR	UN	2A	1.3268	1.3188	2B	1.3292	1.3396
1.4375-6		3A	1.3292	1.3232	3B	1.3292	1.3370
1-7/16-8 OR	UN	2A	1.3541	1.3469	2B	1.3563	1.3657
1.4375-8		3A	1.3563	1.3509	3B	1.3563	1.3634
1-7/16-12 OR	UN	2A	1.3816	1.3757	2B	1.3834	1.3910
1.4375-12		3A	1.3834	1.3790	3B	1.3834	1.3891

Nominal size and threads per inch	Series designation	Class	External	Class	Internal		
Pitch Diameter	Pitch Diameter						
Max. in.	Min. in.	Max. in.	Min. in.				
1-7/16-16 OR	UN	2A	1.3953	1.3901	2B	1.3969	1.4037
1.4375-16		3A	1.3969	1.3930	3B	1.3969	1.4020
1-7/16-18 OR	UNEF	2A	1.3999	1.3949	2B	1.4014	1.4079
1.4375-18		3A	1.4014	1.3977	3B	1.4014	1.4062
1-7/16-20 OR	UN	2A	1.4036	1.3988	2B	1.4050	1.4112
1.4375-20		3A	1.4050	1.4014	3B	1.4050	1.4096
1-7/16-28 OR	UN	2A	1.4130	1.4088	2B	1.4143	1.4198
1.4375-28		3A	1.4143	1.4112	3B	1.4143	1.4181
1-1/2-6 OR		1A	1.3893	1.3772	1B	1.3917	1.4075
1.500-6	UNC	2A	1.3893	1.3812	2B	1.3917	1.4022
		3A	1.3917	1.3856	3B	1.3917	1.3996
1-1/2-8 OR	UN	2A	1.4166	1.4093	2B	1.4188	1.4283
1.500-8		3A	1.4188	1.4133	3B	1.4188	1.4259
1-1/2-12 OR		1A	1.4440	1.4344	1B	1.4459	1.4581
1.500-12	UNF	2A	1.4440	1.4376	2B	1.4459	1.4542
		3A	1.4459	1.4411	3B	1.4459	1.4522
1-1/2-16 OR	UN	2A	1.4578	1.4526	2B	1.4594	1.4662
1.500-16		3A	1.4594	1.4555	3B	1.4594	1.4645
1-1/2-18 OR	UNEF	2A	1.4624	1.4574	2B	1.4639	1.4704
1.500-18		3A	1.4639	1.4602	3B	1.4639	1.4687
1-1/2-20 OR	UN	2A	1.4661	1.4613	2B	1.4675	1.4737
1.500-20		3A	1.4675	1.4639	3B	1.4675	1.4721
1-1/2-28 OR	UN	2A	1.4755	1.4713	2B	1.4768	1.4823
1.500-28		3A	1.4768	1.4737	3B	1.4768	1.4809
1-9/16-6 OR	UN	2A	1.4518	1.4436	2B	1.4542	1.4648

Nominal size and threads per inch	Series designation	Class	External	Class	Internal		
Pitch Diameter	Pitch Diameter						
Max. in.	Min. in.	Max. in.	Min. in.				
1.5625-6		3A	1.4542	1.4481	3B	1.4542	1.4622
1-9/16-8 OR	UN	2A	1.4791	1.4717	2B	1.4813	1.4909
1.5625-8		3A	1.4813	1.4758	3B	1.4813	1.4885
1-9/16-12 OR	UN	2A	1.5066	1.5007	2B	1.5084	1.5160
1.5625-12		3A	1.5084	1.5040	3B	1.5084	1.5141
1-9/16-16 OR	UN	2A	1.5203	1.5151	2B	1.5219	1.5287
1.5625-16		3A	1.5219	1.5180	3B	1.5219	1.5270
1-9/16-18 OR	UNEF	2A	1.5249	1.5199	2B	1.5264	1.5329
1.5625-18		3A	1.5264	1.5227	3B	1.5264	1.5312
1-9/16-20 OR	UN	2A	1.5286	1.5238	2B	1.5300	1.5362
1.5625-20		3A	1.5300	1.5264	3B	1.5300	1.5346
1-5/8-6 OR	UN	2A	1.5142	1.5060	2B	1.5167	1.5274
1.625-6		3A	1.5167	1.5105	3B	1.5167	1.5247
1-5/8-8 OR	UN	2A	1.5416	1.5342	2B	1.5438	1.5535
1.625-8		3A	1.5438	1.5382	3B	1.5438	1.5510
1-5/8-12 OR	UN	2A	1.5691	1.5632	2B	1.5709	1.5785
1.625-12		3A	1.5709	1.5665	3B	1.5709	1.5766
1-5/8-16 OR	UN	2A	1.5828	1.5776	2B	1.5844	1.5912
1.625-16		3A	1.5844	1.5805	3B	1.5844	1.5895
1-5/8-18 OR	UNEF	2A	1.5874	1.5824	2B	1.5889	1.5954
1.625-18		3A	1.5889	1.5852	3B	1.5889	1.5937
1-5/8-20 OR	UN	2A	1.5911	1.5863	2B	1.5925	1.5987
1.625-20		3A	1.5925	1.5889	3B	1.5925	1.5971
1-11/16-6 OR	UN	2A	1.5767	1.5684	2B	1.5792	1.5900

Nominal size and threads per inch	Series designation	Class	External	Class	Internal		
Pitch Diameter	Pitch Diameter						
Max. in.	Min. in.	Max. in.	Min. in.				
1.6875-6		3A	1.5792	1.5730	3B	1.5792	1.5873
1-11/16-8 OR	UN	2A	1.6041	1.5966	2B	1.6063	1.6160
1.6875-8		3A	1.6063	1.6007	3B	1.6063	1.6136
1-11/16-12 OR	UN	2A	1.6316	1.6256	2B	1.6334	1.6412
1.6875-12		3A	1.6334	1.6289	3B	1.6334	1.6392
1-11/16-16 OR	UN	2A	1.6453	1.6400	2B	1.6469	1.6538
1.6875-16		3A	1.6469	1.6429	3B	1.6469	1.6521
1-11/16-18 OR	UNEF	2A	1.6499	1.6448	2B	1.6514	1.6580
1.6875-18		3A	1.6514	1.6476	3B	1.6514	1.6563
1-11/16-20 OR	UN	2A	1.6535	1.6487	2B	1.6550	1.6613
1.6875-20		3A	1.6550	1.6514	3B	1.6550	1.6597
1-3/4-5 OR		1A	1.6174	1.6040	1B	1.6201	1.6375
1.750-5	UNC	2A	1.6174	1.6085	2B	1.6201	1.6317
		3A	1.6201	1.6134	3B	1.6201	1.6288
1-3/4-6 OR	UN	2A	1.6392	1.6309	2B	1.6417	1.6525
1.750-6		3A	1.6417	1.6354	3B	1.6417	1.6498
1-3/4-8 OR	UN	2A	1.6665	1.6590	2B	1.6688	1.6786
1.750-8		3A	1.6688	1.6631	3B	1.6688	1.6762
1-3/4-12 OR	UN	2A	1.6941	1.6881	2B	1.6959	1.7037
1.750-12		3A	1.6959	1.6914	3B	1.6959	1.7017
1-3/4-16 OR	UN	2A	1.7078	1.7025	2B	1.7094	1.7163
1.750-16		3A	1.7094	1.7054	3B	1.7094	1.7146
1-3/4-20 OR	UN	2A	1.7160	1.7112	2B	1.7175	1.7238
1.750-20		3A	1.7175	1.7139	3B	1.7175	1.7222

Nominal size and threads per inch	Series designation	Class	External	Class	Internal		
Pitch Diameter	Pitch Diameter						
Max. in.	Min. in.	Max. in.	Min. in.				
1-13/16-6 OR	UN	2A	1.7017	1.6933	2B	1.7042	1.7151
1.8125-6		3A	1.7042	1.6979	3B	1.7042	1.7124
1-13/16-8 OR	UN	2A	1.7290	1.7214	2B	1.7313	1.7412
1.8125-8		3A	1.7313	1.7256	3B	1.7313	1.7387
1-13/16-12 OR	UN	2A	1.7566	1.7506	2B	1.7584	1.7662
1.8125-12		3A	1.7584	1.7539	3B	1.7584	1.7642
1-13/16-16 OR	UN	2A	1.7703	1.7650	2B	1.7719	1.7788
1.8125-16		3A	1.7719	1.7679	3B	1.7719	1.7771
1-13/16-20 OR	UN	2A	1.7785	1.7737	2B	1.7800	1.7863
1.8125-20		3A	1.7800	1.7764	3B	1.7800	1.7847
1-7/8-6 OR	UN	2A	1.7642	1.7558	2B	1.7667	1.7777
1.875-6		3A	1.7667	1.7604	3B	1.7667	1.7749
1-7/8-8 OR	UN	2A	1.7915	1.7838	2B	1.7938	1.8038
1.875-8		3A	1.7938	1.7881	3B	1.7938	1.8013
1-7/8-12 OR	UN	2A	1.8191	1.8131	2B	1.8209	1.8287
1.875-12		3A	1.8209	1.8164	3B	1.8209	1.8267
1-7/8-16 OR	UN	2A	1.8328	1.8275	2B	1.8344	1.8413
1.875-16		3A	1.8344	1.8304	3B	1.8344	1.8396
1-7/8-20 OR	UN	2A	1.8410	1.8362	2B	1.8425	1.8488
1.875-20		3A	1.8425	1.8389	3B	1.8425	1.8472
1-15/16-6 OR	UN	2A	1.8266	1.8181	2B	1.8292	1.8403
1.9375-6		3A	1.8292	1.8228	3B	1.8292	1.8375
1-15/16-8 OR	UN	2A	1.8540	1.8463	2B	1.8563	1.8663
1.9375-8		3A	1.8563	1.8505	3B	1.8563	1.8638

Nominal size and threads per inch	Series designation	Class	External	Class	Internal		
Pitch Diameter	Pitch Diameter						
Max. in.	Min. in.	Max. in.	Min. in.				
1-15/16-12 OR	UN	2A	1.8816	1.8755	2B	1.8834	1.8913
1.9375-12		3A	1.8834	1.8789	3B	1.8834	1.8893
1-15/16-16 OR	UN	2A	1.8953	1.8899	2B	1.8969	1.9039
1.9375-16		3A	1.8969	1.8929	3B	1.8969	1.9021
1-15/16-20 OR	UN	2A	1.9035	1.8986	2B	1.9050	1.9114
1.9375-20		3A	1.9050	1.9013	3B	1.9050	1.9098
2-4-1/2 OR		1A	1.8528	1.8385	1B	1.8557	1.8743
2.000-4.5	UNC	2A	1.8528	1.8433	2B	1.8557	1.8681
		3A	1.8557	1.8486	3B	1.8557	1.8650
2-6 OR	UN	2A	1.8891	1.8805	2B	1.8917	1.9028
2.000-6		3A	1.8917	1.8853	3B	1.8917	1.9000
2-8 OR	UN	2A	1.9165	1.9087	2B	1.9188	1.9289
2.000-8		3A	1.9188	1.9130	3B	1.9188	1.9264
2-12 OR	UN	2A	1.9441	1.9380	2B	1.9459	1.9538
2.000-12		3A	1.9459	1.9414	3B	1.9459	1.9518
2-16 OR	UN	2A	1.9578	1.9524	2B	1.9594	1.9664
2.000-16		3A	1.9594	1.9554	3B	1.9594	1.9646
2-20 OR	UN	2A	1.9660	1.9611	2B	1.9675	1.9739
2.000-20		3A	1.9675	1.9638	3B	1.9675	1.9723
2-1/8-6 OR	UN	2A	2.0141	2.0054	2B	2.0167	2.0280
2.125-6		3A	2.0167	2.0102	3B	2.0167	2.0251
2-1/8-8 OR	UN	2A	2.0414	2.0335	2B	2.0438	2.0540
2.125-8		3A	2.0438	2.0379	3B	2.0438	2.0515
2-1/8-12 OR	UN	2A	2.0691	2.0630	2B	2.0709	2.0788
2.125-12		3A	2.0709	2.0664	3B	2.0709	2.0768

Nominal size and threads per inch	Series designation	Class	External	Class	Internal		
Pitch Diameter	Pitch Diameter						
Max. in.	Min. in.	Max. in.	Min. in.				
2-1/8-16 OR	UN	2A	2.0828	2.0774	2B	2.0844	2.0914
2.125-16		3A	2.0844	2.0804	3B	2.0844	2.0896
2-1/8-20 OR	UN	2A	2.0910	2.0861	2B	2.0925	2.0989
2.125-20		3A	2.0925	2.0888	3B	2.0925	2.0973
2-1/4-4-1/2 OR		1A	2.1028	2.0882	1B	2.1057	2.1247
2.250-4.5	UNC	2A	2.1028	2.0931	2B	2.1057	2.1183
		3A	2.1057	2.0984	3B	2.1057	2.1152
2-1/4-6 OR	UN	2A	2.1391	2.1303	2B	2.1417	2.1531
2.250-6		3A	2.1417	2.1351	3B	2.1417	2.1502
2-1/4-8 OR	UN	2A	2.1664	2.1584	2B	2.1688	2.1792
2.250-8		3A	2.1688	2.1628	3B	2.1688	2.1766
2-1/4-12 OR	UN	2A	2.1941	2.1880	2B	2.1959	2.2038
2.250-12		3A	2.1959	2.1914	3B	2.1959	2.2018
2-1/4-16 OR	UN	2A	2.2078	2.2024	2B	2.2094	2.2164
2.250-16		3A	2.2094	2.2054	3B	2.2094	2.2146
2-1/4-20 OR	UN	2A	2.2160	2.2111	2B	2.2175	2.2239
2.250-20		3A	2.2175	2.2138	3B	2.2175	2.2223
2-1/8-6 OR	UN	2A	2.2640	2.2555	2B	2.2667	2.2782
2.375-6		3A	2.2667	2.2601	3B	2.2667	2.2753
2-3/8-8 OR	UN	2A	2.2914	2.2833	2B	2.2938	2.3043
2.375-8		3A	2.2938	2.2878	3B	2.2938	2.3017
2-3/8-12 OR	UN	2A	2.3190	2.3128	2B	2.3209	2.3290
2.375-12		3A	2.3209	2.3163	3B	2.3209	2.3269
2-3/8-16 OR	UN	2A	2.3327	2.3272	2B	2.3344	2.3416

Nominal size and threads per inch	Series designation	Class	External	Class	Internal		
Pitch Diameter	Pitch Diameter						
Max. in.	Min. in.	Max. in.	Min. in.				
2.375-16		3A	2.3344	2.3303	3B	2.3344	2.3398
2-3/8-20 OR	UN	2A	2.3410	2.3359	2B	2.3425	2.3491
2.375-20		3A	2.3425	2.3387	3B	2.3425	2.3475
2-1/2-4 OR		1A	2.3345	2.3190	1B	2.3376	2.3578
2.500-4	UNC	2A	2.3345	2.3241	2B	2.3376	2.3511
		3A	2.3376	2.3298	3B	2.3376	2.3477
2-1/2-6 OR	UN	2A	2.3890	2.3800	2B	2.3917	2.4033
2.500-6		3A	2.3917	2.3850	3B	2.3917	2.4004
2-1/2-8 OR	UN	2A	2.4164	2.4082	2B	2.4188	2.4294
2.500-8		3A	2.4188	2.4127	3B	2.4188	2.4268
2-1/2-12 OR	UN	2A	2.4440	2.4378	2B	2.4459	2.4540
2.500-12		3A	2.4450	2.4413	3B	2.4459	2.4519
2-1/2-16 OR	UN	2A	2.4577	2.4522	2B	2.4594	2.4666
2.500-16		3A	2.4594	2.4553	3B	2.4594	2.4648
2-1/2-20 OR	UN	2A	2.4660	2.4609	2B	2.4675	2.1741
2.500-20		3A	2.4675	2.4637	3B	2.4675	2.4725
2-5/8-6 OR	UN	2A	2.5140	2.5050	2B	2.5167	2.5285
2.625-6		3A	2.5167	2.5099	3B	2.5167	2.5255
2-5/8-8 OR	UN	2A	2.5413	2.5331	2B	2.5438	2.5545
2.625-8		3A	2.5438	2.5376	3B	2.5438	2.5518
2-5/8-12 OR	UN	2A	2.5690	2.5628	2B	2.5709	2.5790
2.625-12		3A	2.5709	2.5663	3B	2.5709	2.5769
2-5/8-16 OR	UN	2A	2.5827	2.5772	2B	2.5844	2.5916
2.625-16		3A	2.5844	2.5803	3B	2.5844	2.5898

Nominal size and threads per inch	Series designation	Class	External	Class	Internal		
Pitch Diameter	Pitch Diameter						
Max. in.	Min. in.	Max. in.	Min. in.				
2-5/8-20 OR	UN	2A	2.5910	2.5859	2B	2.5925	2.5991
2.625-20		3A	2.5925	2.5887	3B	2.5925	2.5975
2-3/4-4 OR		1A	2.5844	2.5686	1B	2.5876	2.6082
2.750-4	UNC	2A	2.5844	2.5739	2B	2.5876	2.6013
		3A	2.5876	2.5797	3B	2.5876	2.5979
2-3/4-6 OR	UN	2A	2.6390	2.6299	2B	2.6417	2.6536
2.750-6		3A	2.6417	2.6349	3B	2.6417	2.6506
2-3/4-8 OR	UN	2A	2.6663	2.6580	2B	2.6688	2.6796
2.750-8		3A	2.6688	2.6625	3B	2.6688	2.6769
2-3/4-12 OR	UN	2A	2.6940	2.6878	2B	2.6959	2.7040
2.750-12		3A	2.6959	2.6913	3B	2.6959	2.7019
2-3/4-16 OR	UN	2A	2.7077	2.7022	2B	2.7094	2.7166
2.750-16		3A	2.7094	2.7053	3B	2.7094	2.7148
2-3/4-20 OR	UN	2A	2.7160	2.7109	2B	2.7175	2.7241
2.750-20		3A	2.7175	2.7137	3B	2.7175	2.7225
2-7/8-6 OR	UN	2A	2.7639	2.7547	2B	2.7667	2.7787
2.875-6		3A	2.7667	2.7598	3B	2.7667	2.7757
2-7/8-8 OR	UN	2A	2.7913	2.7829	2B	2.7938	2.8048
2.875-8		3A	2.7938	2.7875	3B	2.7938	2.8020
2-7/8-12 OR	UN	2A	2.8190	2.8127	2B	2.8209	2.8291
2.875-12		3A	2.8209	2.8162	3B	2.8209	2.8271
2-7/8-16 OR	UN	2A	2.8327	2.8271	2B	2.8344	2.8417
2.875-16		3A	2.8344	2.8302	3B	2.8344	2.8399
2-7/8-20 OR	UN	2A	2.8409	2.8357	2B	2.8425	2.8493
2.875-20		3A	2.8425	2.8386	3B	2.8425	2.8476

Nominal size and threads per inch	Series designation	Class	External	Class	Internal		
Pitch Diameter	Pitch Diameter						
Max. in.	Min. in.	Max. in.	Min. in.				
3-4 OR		1A	2.8344	2.8183	1B	2.8376	2.8585
3.000-4	UNC	2A	2.8344	2.8237	2B	2.8376	2.8515
		3A	2.8376	2.8296	3B	2.8376	2.8480
3-6 OR	UN	2A	2.8889	2.8796	2B	2.8917	2.9038
3.000-6		3A	2.8917	2.8847	3B	2.8917	2.9008
3-8 OR	UN	2A	2.9162	2.9077	2B	2.9188	2.9299
3.000-8		3A	2.9188	2.9124	3B	2.9188	2.9271
3-12 OR	UN	2A	2.9440	2.9377	2B	2.9459	2.9541
3.000-12		3A	2.9459	2.9412	3B	2.9459	2.9521
3-16 OR	UN	2A	2.9577	2.9521	2B	2.9594	2.9667
3.000-16		3A	2.9594	2.9552	3B	2.9594	2.9649
3-20 OR	UN	2A	2.9659	2.9607	2B	2.9675	2.9743
3.000-20		3A	2.9675	2.9636	3B	2.9675	2.9726
3-1/8-6 OR	UN	2A	3.0139	3.0045	2B	3.0167	3.0289
3.125-6		3A	3.0167	3.0097	3B	3.0167	3.0259
3-1/8-8 OR	UN	2A	3.0412	3.0326	2B	3.0438	3.0550
3.125-8		3A	3.0438	3.0374	3B	3.0438	3.0522
3-1/8-12 OR	UN	2A	3.0690	3.0627	2B	3.0709	3.0791
3.125-12		3A	3.0709	3.0662	3B	3.0709	3.0771
3-1/8-16 OR	UN	2A	3.0827	3.0771	2B	3.0844	3.0971
3.125-16		3A	3.0844	3.0802	3B	3.0844	3.0899
3-1/4-4 OR		1A	3.0843	3.0680	1B	3.0876	3.1088
3.250-4	UNC	2A	3.0843	3.0734	2B	3.0876	3.1017
		3A	3.0876	3.0794	3B	3.0876	3.0982

Nominal size and threads per inch	Series designation	Class	External	Class	Internal		
Pitch Diameter	Pitch Diameter						
Max. in.	Min. in.	Max. in.	Min. in.				
3-1/4-6 OR	UN	2A	3.1389	3.1294	2B	3.1417	3.1540
3.250-6		3A	3.1417	3.1346	3B	3.1417	3.1509
3-1/4-8 OR	UN	2A	3.1662	3.1575	2B	3.1688	3.1801
3.250-8		3A	3.1688	3.1623	3B	3.1688	3.1773
3-1/4-12 OR	UN	2A	3.1940	3.1877	2B	3.1959	3.2041
3.250-12		3A	3.1959	3.1912	3B	3.1959	3.2021
3-1/4-16 OR	UN	2A	3.2077	3.2021	2B	3.2094	3.2167
3.250-16		3A	3.2094	3.2052	3B	3.2094	3.2149
3-3/8-6 OR	UN	2A	3.2638	3.2543	2B	3.2667	3.2791
3.375-6		3A	3.2667	3.2595	3B	3.2667	3.2760
3-3/8-8 OR	UN	2A	3.2912	3.2824	2B	3.2938	3.3052
3.375-8		3A	3.2938	3.2872	3B	3.2938	3.3023
3-3/8-12 OR	UN	2A	3.3190	3.3126	2B	3.3209	3.3293
3.375-12		3A	3.3209	3.3161	3B	3.3209	3.3272
3-3/8-16 OR	UN	2A	3.3327	3.3269	2B	3.3344	3.3419
3.375-16		3A	3.3344	3.3301	3B	3.3344	3.3400
3-1/2-4 OR		1A	3.3343	3.3177	1B	3.3376	3.3591
3.500-4	UNC	2A	3.3343	3.3233	2B	3.3376	3.3519
		3A	3.3376	3.3293	3B	3.3376	3.3484
3-1/2-6 OR	UN	2A	3.3888	3.3792	2B	3.3917	3.4042
3.500-6		3A	3.3917	3.3845	3B	3.3917	3.4011
3-1/2-8 OR	UN	2A	3.4162	3.4074	2B	3.4188	3.4303
3.500-8		3A	3.4188	3.4122	3B	3.4188	3.4274
3-1/2-12 OR	UN	2A	3.444	3.4376	2B	4.4459	3.4543
3.500-12		3A	3.4459	3.4411	3B	3.4459	3.4522

Nominal size and threads per inch	Series designation	Class	External	Class	Internal		
Pitch Diameter	Pitch Diameter						
Max. in.	Min. in.	Max. in.	Min. in.				
3-1/2-16 OR	UN	2A	3.4577	3.4519	2B	3.4594	3.4669
3.500-16		3A	3.4594	3.4551	3B	3.4594	3.4650
3-5/8-6 OR	UN	2A	3.5138	3.5041	2B	3.5167	3.5293
3.625-6		3A	3.5167	3.5094	3B	3.5167	3.5262
3-5/8-8 OR	UN	2A	3.5411	3.5322	2B	3.5438	3.5554
3.625-8		3A	3.5438	3.5371	3B	3.5438	3.5525
3-5/8-12 OR	UN	2A	3.5690	3.5626	2B	3.5709	3.5793
3.625-12		3A	3.5709	3.5661	3B	3.5709	3.5772
3.5/8-16 OR	UN	2A	3.5827	3.5769	2B	3.5844	3.5919
3.625-16		3A	3.5844	3.5801	3B	3.5844	3.5900
3-3/4-4 OR		1A	3.5842	3.5674	1B	3.5876	3.6094
3.750-4	UNC	2A	3.5842	3.5730	2B	3.5876	3.6021
		3A	3.5876	3.5792	3B	3.5876	3.5985
3-3/4-6 OR	UN	2A	3.6388	3.6290	2B	3.6417	3.6544
3.750-6		3A	3.6417	3.6344	3B	3.6417	3.6512
3-3/4-8 OR	UN	2A	3.6661	3.6571	2B	3.6688	3.6805
3.750-8		3A	3.6688	3.6621	3B	3.6688	3.6776
3-3/4-12 OR	UN	2A	3.6940	3.6876	2B	3.6959	3.7043
3.750-12		3A	3.6959	3.6911	3B	3.6959	3.7022
3-3/4-16 OR	UN	2A	3.7077	3.7019	2B	3.7094	3.7169
3.750-16		3A	3.7094	3.7051	3B	3.7094	3.7150
3-7/8-6 OR	UN	2A	3.7637	3.7538	2B	3.7667	3.7795
3.875-6		3A	3.7667	3.7593	3B	3.7667	3.7763
3-7/8-8 OR	UN	2A	3.7911	3.7820	2B	3.7938	3.8056

Nominal size and threads per inch	Series designation	Class	External	Class	Internal		
Pitch Diameter	Pitch Diameter						
Max. in.	Min. in.	Max. in.	Min. in.				
3.875-8		3A	3.7938	3.7870	3B	3.7938	3.8026
3-7/8-12 OR	UN	2A	3.8189	3.8124	2B	3.8209	3.8294
3.875-12		3A	3.8209	3.8160	3B	3.8209	3.8273
3-7/8-16 OR	UN	2A	3.8326	3.8267	2B	3.8344	3.8420
3.875-16		3A	3.8344	3.8300	3B	3.8344	3.8401
4-4 OR		1A	3.8342	3.8172	1B	3.8376	3.8597
4.000-4	UNC	2A	3.8342	3.8229	2B	3.8376	3.8523
		3A	3.8376	3.8291	3B	3.8376	3.8487
4-6 OR	UN	2A	3.8887	3.8788	2B	3.8917	3.9046
4.000-6		3A	3.8917	3.8843	3B	3.8917	3.9014
4-8 OR	UN	2A	3.9161	3.9070	2B	3.9188	3.9307
4.000-8		3A	3.9188	3.9120	3B	3.9188	3.9277
4-12 OR	UN	2A	3.9439	3.9374	2B	3.9459	3.9544
4.000-12		3A	3.9459	3.9410	3B	3.9459	3.9523
4-16 OR	UN	2A	3.9576	3.9517	2B	3.9594	3.9670
4.000-16		3A	3.9594	3.9550	3B	3.9594	3.9651
4-1/8-6 OR	UN	2A	4.0137	4.0037	2B	4.0167	4.0297
4.125-6		3A	4.0167	4.0092	3B	4.0167	4.0264
4-1/8-12 OR	UN	2A	4.0689	4.0624	2B	4.0709	4.0794
4.125-12		3A	4.0709	4.0660	3B	4.0709	4.0773
4-1/8-16 OR	UN	2A	4.0826	4.0767	2B	4.0844	4.0920
4.125-16		3A	4.0844	4.0800	3B	4.0844	4.0901
4-1/4-4 OR	UN	2A	4.0842	4.0727	2B	4.0876	4.1025
4.250-4		3A	4.0876	4.0790	3B	4.0876	4.0988

Nominal size and threads per inch	Series designation	Class	External	Class	Internal		
Pitch Diameter	Pitch Diameter						
Max. in.	Min. in.	Max. in.	Min. in.				
4-1/4-6 OR	UN	2A	4.1387	4.1286	2B	4.1417	4.1548
4.250-6		3A	4.1417	4.1342	3B	4.1417	4.1515
4-1/4-12 OR	UN	2A	4.1939	4.1874	2B	4.1959	4.2044
4.250-12		3A	4.1959	4.1910	3B	4.1959	4.2023
4-1/4-16 OR	UN	2A	4.2076	4.2017	2B	4.2094	4.2170
4.250-16		3A	4.2094	4.2050	3B	4.2094	4.2151
4-3/8-6 OR	UN	2A	4.2637	4.2536	2B	4.2667	4.2799
4.375-6		3A	4.2667	4.2591	3B	4.2667	4.2766
4-3/8-12 OR	UN	2A	4.3189	4.3124	2B	4.3209	4.3294
4.375-12		3A	4.3209	4.3160	3B	4.3209	4.3273
4-3/8-16 OR	UN	2A	4.3326	4.3267	2B	4.3344	4.3420
4.375-16		3A	4.3344	4.3300	3B	4.3344	4.3401
4-1/2-4 OR	UN	2A	4.3341	4.3225	2B	4.3376	4.3527
4.500-4		3A	4.3376	4.3289	3B	4.3376	4.3489
4-1/2-6 OR	UN	2A	4.3886	4.3784	2B	4.3917	4.4050
4.500-6		3A	4.3917	4.3840	3B	4.3917	4.4016
4-1/2-12 OR	UN	2A	4.4439	4.4374	2B	4.4459	4.4544
4.500-12		3A	4.4459	4.4410	3B	4.4459	4.4523
4-1/2-16 OR	UN	2A	4.4576	4.4517	2B	4.4594	4.4670
4.500-16		3A	4.4594	4.4550	3B	4.4594	4.4651
4-5/8-6 OR	UN	2A	4.5136	4.5033	2B	4.5167	4.5300
4.625-6		3A	4.5167	4.5090	3B	4.5167	4.5267
4-5/8-12 OR	UN	2A	4.5689	4.5622	2B	4.5709	4.5796
4.625-12		3A	4.5709	4.5659	3B	4.5709	4.5775

Nominal size and threads per inch	Series designation	Class	External	Class	Internal		
Pitch Diameter	Pitch Diameter						
Max. in.	Min. in.	Max. in.	Min. in.				
4-5/8-16 OR	UN	2A	4.5826	4.5765	2B	4.5844	4.5923
4.625-16		3A	4.5844	4.5799	3B	4.5844	4.5903
4-3/4-4 OR	UN	2A	4.5841	4.5724	2B	4.5876	4.6029
4.750-4		3A	4.5876	4.5788	3B	4.5876	4.5990
4-3/4-6 OR	UN	2A	4.6386	4.6283	2B	4.6417	4.6551
4.750-6		3A	4.6417	4.6340	3B	4.6417	4.6518
4-3/4-12 OR	UN	2A	4.6939	4.6872	2B	4.6959	4.7046
4.750-12		3A	4.6959	4.6909	3B	4.6959	4.7025
4-3/4-16 OR	UN	2A	4.7076	4.7015	2B	4.7094	4.7173
4.750-16		3A	4.7094	4.7049	3B	4.7094	4.7153
4-7/8-6 OR	UN	2A	4.7636	4.7532	2B	4.7667	4.7802
4.875-6		3A	4.7667	4.7589	3B	4.7667	4.7768
4-7/8-12 OR	UN	2A	4.8189	4.8122	2B	4.8209	4.8296
4.875-12		3A	4.8209	4.8159	3B	4.8209	4.8275
4-7/8-16 OR	UN	2A	4.8326	4.8265	2B	4.8344	4.8423
4.875-16		3A	4.8344	4.8299	3B	4.8344	4.8403
5-4 OR	UN	2A	4.8340	4.8221	2B	4.8376	4.8530
5.000-4		3A	4.8376	4.8287	3B	4.8376	4.8492
5-6 OR	UN	2A	4.8886	4.8781	2B	4.8917	4.9053
5.000-6		3A	4.8917	4.8839	3B	4.8917	4.9019
5-12 OR	UN	2A	4.9439	4.9372	2B	4.9459	4.9516
5.000-12		3A	4.9549	4.9400	3B	4.9459	4.9525
5-16 OR	UN	2A	4.9576	4.9515	2B	4.9594	4.9673
5.000-16		3A	4.9594	4.9549	3B	4.9594	4.9653

Nominal size and threads per inch	Series designation	Class	External	Class	Internal		
Pitch Diameter	Pitch Diameter						
Max. in.	Min. in.	Max. in.	Min. in.				
5-1/8-12 OR	UN	2A	5.0689	5.0622	2B	5.0709	5.0786
5.125-12		3A	5.0709	5.0659	3B	5.0709	5.0775
5-1/8-16 OR	UN	2A	5.0826	5.0765	2B	5.0844	5.0923
5.125-16		3A	5.0844	5.0799	3B	5.0844	5.0903
5-1/4-4 OR	UN	2A	5.0840	5.0720	2B	5.0876	5.1032
5.250-4		3A	5.0876	5.0786	3B	5.0876	5.0993
5-1/4-12 OR	UN	2A	5.1939	5.1872	2B	5.1959	5.2046
5.250-12		3A	5.1959	5.1909	3B	5.1959	5.2025
5-1/4-16 OR	UN	2A	5.2076	5.2015	2B	5.2094	5.2173
5.250-16		3A	5.2094	5.2049	3B	5.2094	5.2153
5-3/8-12 OR	UN	2A	5.3189	5.3122	2B	5.3209	5.3296
5.375-12		3A	5.3209	5.3159	3B	5.3209	5.3275
5-3/8-16 OR	UN	2A	5.3326	5.3265	2B	5.3344	5.3423
5.375-16		3A	5.3344	5.3299	3B	5.3344	5.3403
5-1/2-4 OR	UN	2A	5.3340	5.3219	2B	5.3376	5.3534
5.500-4		3A	5.3376	5.3285	3B	5.3376	5.3494
5-1/2-12 OR	UN	2A	5.4439	5.4372	2B	5.4459	5.4516
5.500-12		3A	5.4459	5.4409	3B	5.4459	5.4525
5-1/2-16 OR	UN	2A	5.4576	5.4515	2B	5.4594	5.4673
5.500-16		3A	5.4594	5.4549	3B	5.4594	5.4653
5-5/8-12 OR	UN	2A	5.5688	5.5619	2B	5.5709	5.5799
5.625-12		3A	5.5709	5.5657	3B	5.5709	5.5776
5-5/8-16 OR	UN	2A	5.5825	5.5763	2B	5.5844	5.5925
5.625-16		3A	5.5844	5.5797	3B	5.5844	5.5905

Nominal size and threads per inch	Series designation	Class	External	Class	Internal		
Pitch Diameter	Pitch Diameter						
Max. in.	Min. in.	Max. in.	Min. in.				
5-3/4-4 OR	UN	2A	5.5839	5.5717	2B	5.5876	5.6035
5.750-4		3A	5.5876	5.5784	3B	5.5876	5.5995
5-3/4-12 OR	UN	2A	5.6938	5.6869	2B	5.6959	5.7049
5.750-12		3A	5.6959	5.6907	3B	5.6959	5.7026
5-3/4-16 OR	UN	2A	5.7075	5.7013	2B	5.7094	5.7175
5.750-16		3A	5.7094	5.7047	3B	5.7094	5.7155
5-7/8-12 OR	UN	2A	5.8188	5.8119	2B	5.8209	5.8299
5.875-12		3A	5.8209	5.8157	3B	5.8209	5.8276
5-7/8-16 OR	UN	2A	5.8325	5.8263	2B	5.8344	5.8425
5.875-16		3A	5.8344	5.8297	3B	5.8344	5.8405
6-4 OR	UN	2A	5.8339	5.8215	2B	5.8376	5.8537
6.000-4		3A	5.8376	5.8283	3B	5.8376	5.8496
6-12 OR	UN	2A	5.9138	5.9369	2B	5.9459	5.9549
6.000-12		3A	5.9459	5.9107	3B	5.9459	5.9526
6-16 OR	UN	2A	5.9575	5.9513	2B	5.9594	5.9675
6.000-16		3A	5.9594	5.9547	3B	5.9594	5.9655

STANDARD FRACTION TO DECIMAL CONVERSION CHART

4ths	8ths	16ths	32nds	64ths	To 3	To 4	4ths	8ths	16ths	32nds	64ths	To 3	To 4
				1/64	.016	.0156					33/64	.516	.5156
			1/32	-----	.031	.0312				17/32	------	.531	.5312
				3/64	.047	.0469					35/64	.547	.5469
		1/16	-----		.062	.0625			9/16	-----	-----	.562	.5625
				5/64	.078	.0781					37/64	.578	.5781
			3/32	-----	.094	.0938				19/32	------	.594	.5938
				7/64	.109	.1094					39/64	.609	.6094
	1/8	-----	-----	-----	.125	.1250		5/8	-----	-----	-----	.625	.6250
				9/64	.141	.1406					41/64	.641	.6406
			5/32	-----	.156	.1562				21/32	------	.656	.6562
				11/64	.172	.1719					43/64	.672	.6719
		3/16	-----	-----	.188	.1875			11/16	-----	-----	.688	.6875
				13/64	.203	.2031					45/64	.703	.7031
			7/32	------	.219	.2188				23/32	------	.719	.7188
				15/64	.234	.2344					47/64	.734	.7344
1/4	-----	-----	-----	-----	.250	.2500	3/4	-----	-----	-----	-----	.750	.7500
				17/64	.266	.2656					49/64	.766	.7656
			9/32	------	.281	.2812				25/32	------	.781	.7812
				19/64	.297	.2969					51/64	.797	.7969
		5/16	-----	-----	.312	.3125			13/16	-----	-----	.812	.8125
				21/64	.328	.3281					53/64	.828	.8281
			11/32	------	.344	.3438				27/32	------	.844	.8438
				23/64	.359	.3594					55/64	.859	.8594
	3/8	-----	-----	-----	.375	.3750		7/8	-----	-----	-----	.875	.8750
				25/64	.391	.3906					57/64	.891	.8906
			13/32	------	.406	.4062				29/32	------	.906	.9062
				27/64	.422	.4219					59/64	.922	.9219
		7/16	-----	-----	.438	.4375			15/16	-----	-----	.938	.9375
				29/64	.453	.4531					61/64	.953	.9531
			15/32	------	.469	.4688				31/32	------	.969	.9688
				31/64	.484	.4844					63/64	.984	.9844
					.500	.5000						1.000	1.0000

AMERICAN STANDARD TAPER PIPE THREADS

PIPE SIZE	NO. OF THREADS PER INCH	TAP DRILL SIZE	DECIMAL EQUIVALENT OF TAP DRILL
1/8	27	R	0.3390
1/4	18	7/16	0.4375
3/8	18	37/64	0.5781
1/2	14	23/32	0.7187
3/4	14	59/64	0.9218
1	11-1/2	1-5/32	1.1562
1-1/4	11-1/2	1-1/2	1.5000
1-1/2	11-1/2	1-47/64	1.7343

FIIG Change List

FIIG Change List, Effective September 3, 2010

This change replaced with ISAC or and/or coding