FEDERAL ITEM IDENTIFICATION GUIDE

INSULATORS, ELECTRICAL

This Reprint replaces FIIG A007A, dated June 1, 2007.

Commander

Defense Logistics Information Service

ATTN: DLIS-K

74 Washington Avenue North, Suite 7

Battle Creek, Michigan 49037-3084

(COMM) (269) 961-5779

(DSN) 661-5779

PUBLISHED BY DEFENSE LOGISTICS INFORMATION SERVICE, BATTLE CREEK, MI

This Federal Item Identification Guide for Supply Cataloging is issued under the authority of Department of Defense Instruction 5025.7.

The use of this publication is mandatory for US. Federal Activities participating in Federal Catalog System Operations.

BY ORDER OF THE DIRECTOR

/s/

Commander

Defense Logistics Information Service

Table of Contents

GENERAL INFORMATION 1
Index of Master Requirement Codes 5
INDEX OF APPROVED ITEM NAMES COVERED BY THIS FIIG 7
APPLICABILITY KEY INDEX 10
SECTION I 26
SECTION III 40
Reply Tables 46
Reference Drawing Groups 81
Technical Data Tables 172
FIIG Change List 199

GENERAL INFORMATION

1. Purpose and Scope

This Federal Item Identification Guide (FIIG) is a self-contained document for the collection, coding, transmittal, and retrieval of item characteristics and related supply management data for an item of supply for logistical use. This FIIG is to be used to describe items of supply identified by the index of approved item names appearing in this section.

2. Contents

This FIIG is comprised of the following:

Index of Approved Item Names Covered by this FIIG
Applicability Key Index
Section I - Item Characteristics Data Requirements
Section III - New text that should be here.
Appendix A - Reply Tables
Appendix B - Reference Drawing Groups (as applicable)
Appendix C - Technical Data Tables (as applicable)

a. Index of Approved Item Names Covered by this FIIG:

The index lists the approved item names with definitions and item name codes as they appear in Cataloging Handbook H6, applicable to this FIIG. In addition, each name entry is assigned an applicability key for use in relating the characteristics requirements in Section I to the specific item name.

b. Applicability Key Index:

The purpose of this index is to provide the user with a ready reference for determining the specific requirements which are applicable to a given approved item name. This index lists all requirements in sequence as they appear in the FIIG. The applicability of a Master Requirement Coded requirement is indicated by the column headed by the specific item name applicability key as follows:

(1) The letter "X" indicates the requirement must be answered for a full descriptive item.

(2) The letters "AR" indicate the requirement is to be answered as required by (1) instructional notes within the FIIG; (2) when the reply is predicated on replies to a related main requirement; or (3) when an asterisk (*) is used in conjunction with the applicability key column in Section I.

(3) A blank in the column indicates the requirement is not applicable to the specific item name.

c. Section I - Item Characteristics Data Requirements:

This section contains the physical and performance characteristics requirements needed to describe and identify an item of supply. These characteristics differentiate one item from all other items of supply and are to be used to meet the needs of all supported functions. This section is arranged in columns. Identification of each column and instructions pertinent thereto are as follows:

(1) Applicability Key:

The first column shows the applicability key(s) for each requirement. It indicates whether the requirement need be satisfied for the item being identified. "ALL" indicates that the requirement must be answered for all items covered by the FIIG. One or more alphabetic character(s) or group of one or more alphabetic characters indicates a response is required when describing items with an approved item name or names represented by the key(s). An asterisk (*) used in conjunction with any applicability key indicates that the characteristic stated in the requirement may not be applicable to all items covered by the FIIG.

(2) Master Requirement Codes (MRC):

A four-position code which is assigned to a FIIG requirement for identification of the requirement, cross-referencing requirements in the various sections and appendices of the FIIG, and for mechanized processing and retrieval of FIIG generated data. Absence of a MRC for a requirement indicates a lead-in to requirements with individual MRCs in Appendix B.

(a) The coding technique for providing MULTIPLE/OPTIONAL responses will not be used for a Section I requirement assigned Mode Code A or L that leads to Appendix B sketches with dimensional requirements.

(b) Identified Secondary Address Coding:

This technique is for extending the Master Requirement Code so that a unique address is provided for each application of the requirement in relation to the item and is authorized only as instructed within the requirement. Responses coded through this technique will always consist of the following: (1) Master Requirement Codes, (2) indicator code (a single numeric character determined by the number of positions contained), (3) identified secondary address code (1 to 3-digit alphabetic codes determined by the number of predicted replies), (4) the mode code, (5) the reply code and/or clear text response, and (6) end with a record separator (*). Steps (1) through (6) are repeated for each application of the requirement.

(c) AND/OR coding:

A technique for extending the Master Requirement Code to provide a distinctive address for multiple responses to the same requirement. Responses coded through this technique will always consist of (1) Master Requirement Code, (2) mode code, (3) the response or reply code (as instructed by the requirement), (4) a single dollar sign ($) for an OR condition, or a double dollar sign ($$) for an AND condition, (5) the mode code, (6) the response or reply code

(followed by conditions (4) through (6) for each of the multiple responses) and (7) end with a record separator (*). NOTE: Apply this technique only when instructed by the requirement sample reply (e.g.).

(3) Mode Code:

A one-position alphabetic code that specifies the manner in which a response will be prepared. Each requirement assigned a MRC is also assigned a mode code. Sample replies follow each FIIG requirement displaying the proper construction of a response for the assigned mode code. The response to a requirement will always be prepared in accordance with the assigned mode code and sample reply except in the following instances:

(a) Use of E Mode Code replies is not authorized. If a reply needed to describe an item is not listed in the applicable table, contact the FIIG Initiator.

(b) Mode Code K may not be used for any requirement unless instructed by the requirement instructions.

(4) Requirement:

This portion includes the characteristics data elements and data use identifiers required to identify and differentiate one item of supply from another, narrative definitions, and explanations as to use and method of expression. Instructions for coding and preparing replies are also provided.

(5) Reply Code:

A code that represents an established authorized reply to a requirement.

d. Section III - Supplementary Technical and Supply Management Data:

This section includes those characteristics requirements necessary to support specific logistics functions other than National Stock Number assignment.

e. Appendix A - Reply Tables:

Tables of authorized replies to requirements and reply codes when the tables are too lengthy for inclusion in Section I/III, when applicable.

f. Appendix B - Reference Drawings:

This appendix contains representative illustrations which portray specific variations of one or more generic characteristics. If reference drawings contain requirements pages to be used in conjunction with illustrations for dimensioning purposes, the requirements pages will contain Master Requirement Codes, mode codes, and a statement of the requirement. A response to requirements on a requirements page is necessary only for those Master Requirement Codes applicable to the illustration selected.

g. Appendix C - Technical Data Tables:

This appendix contains conversion charts and similar data pertinent to the requirements in Section I/III, when applicable.

3. Enter administrative MRC CLQL immediately following the last FIIG requirement reply, as instructed below:

MRC	Mode Code	Requirement	Example
CLQL	G	COLLOQUIAL NAME (common usage name by which an item is known)	CLQLGWOVEN WIRE CLOTH*

4. Special Instructions and Indicator Definitions

a. Measurements:

Unless otherwise indicated within a requirement example, enter all measurements in decimal form, carried to the nearest three decimal places, with a minimum of one digit preceding the decimal. For SI (metric), enter all measurements with a minimum of one digit before and after the decimal. For fraction to decimal conversion, see Appendix C.

b. Indicators:

A cross hatch (#) following an AIN, MRC, Reply Code or Drawing Number indicates for "ALL EXCEPT USA" use only.

5. Indexes

a. Index of Data Requirements

This index is arranged in alphabetic sequence by Master Requirement Code, cross-referenced to the applicable data requirement and page number(s).

b. Index of Approved Item Names

This index is arranged in alphabetic sequence referenced to Applicability Key.

c. Applicability Key Index

This index is arranged in Applicability Key Sequence.

6. Maintenance

Requests for revisions and other changes will be directed to:

Index of Master Requirement Codes

NAME 26
STYL 26
BSPB 26
MTLC 27
STLC 27
AAPC 27
UKBG 28
AXHR 28
ABGX 29
CQBP 29
CRFL 30
CQTP 31
CRPG 31
CQQR 31
CTTC 32
CQJM 32
CRBM 33
AAKV 33
ACHF 33
MARK 34
CBBL 34
FEAT 34
TEST 35
SPCL 36
ZZZK 36
ZZZT 37
ZZZW 37
ZZZX 37
ZZZY 38
CRTL 38
PRPY 38
ENAC 39
BDPK 39
ELRN 40
ELCD 40
TMQY 40
ADZC 41
AFJN 41
PMLC 42
PMWT 42
PRMT 43

SUPP 43
ZZZP 43
AGAV 44
CXCY 44
HZRD 44

INDEX OF APPROVED ITEM NAMES COVERED BY THIS FIIG

Approved Item Name	INC	App Key

Insulator

1. (Electrical) An item made of nonconductive material such as natural occuring mineral mica, vitrified inorganic materials produced by means of heat (ceramic materials) or material which has been electrically rated by government or industry standards or specifications. It is used to support or separate conductors and is specifically designed to prevent any undesirable flow of current between conductors and/or other objects.

INSULATOR (1), BEAD	18299	A

An insulator specifically designed to be used as a spacer in, or in conjunction with, such items as coaxial cables, transmission lines, brush shunts, test leads, high voltage lines and the like. Has an axial hole through which the wire passes and the length of which is considerably more than 25 percent of the largest diameter perpendicular to the hole. The external shapes may be variations of cylindrical and spherical shapes.

INSULATOR (1), BOWL	18300	B

An insulator used for wire entering or feedthru purposes. May include mounting and/or conducting hardware. Includes replacement bowls for feedthru insulators. Characterized by one or more bowl or bell shaped insulator surfaces.

INSULATOR (1), BUSHING	18301	C

An insulator designed to fit into and reduce the effective diameter of the hole(s). It may include mounting and/or conducting hardware. For flexible bushing-type insulators that are self-retaining and consist of two facing flanges separated by a neck, see GROMMET, NONMETALLIC. Also see SPACER, SLEEVE and BUSHING, SLEEVE. Excludes INSULATION SLEEVING, ELECTRICAL.

INSULATOR (1), CLEAT	18282	D

An insulator of generally rectangular shape which is designed to be attached to a rigid structure. It consists of two separate parts. For items of a generally cylindrical shape, see INSULATOR, KNOB.

INSULATOR (1), DISK	18295	E

An insulator that is essentially thin, flat, and round in shape, with or without holes. The general shape may vary by the addition of such features as beveled edges, indented surfaces, through-hole key and/or peripheral flats. It may have one or more holes off center; if there are two or more holes, one may be centrally located. Excludes MOUNTING PAD, ELECTRICAL-ELECTRONIC COMPONENT.

INSULATOR (1), FEEDTHRU	18284	F

An insulator which is specifically designed to provide for the passage of electrical conductors through such items as panels, bulkheads, walls, and the like. It consists of two or more insulators, including one or more studs fed through the items in such a way as to be used as conductors. The studs may be used for mounting. See also INSULATOR, BOWL; and TERMINAL, FEEDTHRU, INSULATED.

Approved Item Name	INC	App Key
INSULATOR (1), KNOB	18283	G

An insulator of generally cylindrical shape which is designed to be attached to a rigid structure.

INSULATOR (1), PIN	18289	H

An insulator which is grooved for guiding purposes and which is specifically designed to be mounted on a crossarm pin or bracket pin.

INSULATOR (1), PINCAP	00224	J

An insulator having an integral provision for rigidly assembling one upon the other for the purpose of extending its insulating range.

INSULATOR (1), PLATE	18296	K

An insulator having flat surfaces, with or without holes, whose thickness does not exceed 25 percent of its length or width, whichever is smaller, and whose shape is other than round. Excludes INSULATOR (1),SPACER; INSULATOR (1), WASHER; MOUNTING PAD, ELECTRICAL-ELECTRONIC COMPONENT; PLATE, ELECTRICAL SHIELD; and TERMINAL BOARD.

INSULATOR (1), SPACER	36783	K

An insulator having flat surfaces, with or without holes, whose thickness exceeds 25 percent of its length or width, whichever is smaller, and whose shape is other than round. It is used to support and/or separate electrical conductors and components. Excludes INSULATOR (1), STANDOFF; INSULATOR (1), PLATE; and INSULATOR (1), SPREADER.

INSULATOR (1), SPREADER	18290	L

An insulator which is specifically designed to separate or hold apart free swinging electrical conductors.

INSULATOR (1), STANDOFF	00225	M

An insulator which is specifically designed to support a conductor or an item at a predetermined spacing from a mounting surface. May include mounting and/or conducting hardware.

INSULATOR (1), STRAIN	00226	N

An insulator specifically designed to transmit to the tower, or other support, the entire pull of a conductor or guy wire.

INSULATOR (1), SUSPENSION	00227	P

An insulator having an integral provision for the nonrigid assembling of one upon the other for the purpose of extending its insulating range. It is specifically designed to suspend a conductor from a tower or other support.

Approved Item Name	INC	App Key
INSULATOR (1), WASHER	18294	Q

An insulator that is essentially thin and flat, with one through hole centrally located. The general shape may vary by the addition of features such as beveled edges, indented surfaces, through hole keys, and/or peripheral flats. The thickness measured between the two parallel bearing surfaces must not exceed 25 percent of the outside diameter or the shortest distance between peripheral flats. Excludes items with more than one hole. See also INSULATOR, DISK; INSULATOR, BEAD; INSULATOR, BUSHING; and INSULATOR, PLATE.

APPLICABILITY KEY INDEX

	A	B	C	D	E	F	G	H	J	K
NAME	X	X	X	X	X	X	X	X	X	X
STYL	X	X	X	X	X	X	X	X	X	X
AARX	AR	AR	AR	AR	AR	AR	AR	AR	AR	AR
ABKV	AR	AR	AR	AR	AR	AR	AR	AR	AR	AR
ABKW	AR	AR	AR	AR	AR	AR	AR	AR	AR	AR
AJQL	AR	AR	AR	AR	AR	AR	AR	AR	AR	AR
ALHL	AR	AR	AR	AR	AR	AR	AR	AR	AR	AR
CQBH	AR	AR	AR	AR	AR	AR	AR	AR	AR	AR
CQLM	AR	AR	AR	AR	AR	AR	AR	AR	AR	AR
CRWK	AR	AR	AR	AR	AR	AR	AR	AR	AR	AR
ABGA	AR	AR	AR	AR	AR	AR	AR	AR	AR	AR
ABHP	AR	AR	AR	AR	AR	AR	AR	AR	AR	AR
ABKU	AR	AR	AR	AR	AR	AR	AR	AR	AR	AR
ABKV	AR	AR	AR	AR	AR	AR	AR	AR	AR	AR
ABKW	AR	AR	AR	AR	AR	AR	AR	AR	AR	AR
ABMK	AR	AR	AR	AR	AR	AR	AR	AR	AR	AR
ABTB	AR	AR	AR	AR	AR	AR	AR	AR	AR	AR
ADUW	AR	AR	AR	AR	AR	AR	AR	AR	AR	AR
ADUX	AR	AR	AR	AR	AR	AR	AR	AR	AR	AR
AFFL	AR	AR	AR	AR	AR	AR	AR	AR	AR	AR
AGHG	AR	AR	AR	AR	AR	AR	AR	AR	AR	AR
AGPX	AR	AR	AR	AR	AR	AR	AR	AR	AR	AR
AJQL	AR	AR	AR	AR	AR	AR	AR	AR	AR	AR
AJQM	AR	AR	AR	AR	AR	AR	AR	AR	AR	AR
AYGJ	AR	AR	AR	AR	AR	AR	AR	AR	AR	AR
BGJZ	AR	AR	AR	AR	AR	AR	AR	AR	AR	AR
BQCT	AR	AR	AR	AR	AR	AR	AR	AR	AR	AR
BXCZ	AR	AR	AR	AR	AR	AR	AR	AR	AR	AR
CFNT	AR	AR	AR	AR	AR	AR	AR	AR	AR	AR
CQBJ	AR	AR	AR	AR	AR	AR	AR	AR	AR	AR
CQBL	AR	AR	AR	AR	AR	AR	AR	AR	AR	AR
CQBM	AR	AR	AR	AR	AR	AR	AR	AR	AR	AR
CQBR	AR	AR	AR	AR	AR	AR	AR	AR	AR	AR
CQDD	AR	AR	AR	AR	AR	AR	AR	AR	AR	AR
CQDM	AR	AR	AR	AR	AR	AR	AR	AR	AR	AR
CQFZ	AR	AR	AR	AR	AR	AR	AR	AR	AR	AR
CQHB	AR	AR	AR	AR	AR	AR	AR	AR	AR	AR
CQHR	AR	AR	AR	AR	AR	AR	AR	AR	AR	AR
CQKY	AR	AR	AR	AR	AR	AR	AR	AR	AR	AR
CQLF	AR	AR	AR	AR	AR	AR	AR	AR	AR	AR
CQLJ	AR	AR	AR	AR	AR	AR	AR	AR	AR	AR
CQPP	AR	AR	AR	AR	AR	AR	AR	AR	AR	AR
CQSF	AR	AR	AR	AR	AR	AR	AR	AR	AR	AR
CRCX	AR	AR	AR	AR	AR	AR	AR	AR	AR	AR
CRDH	AR	AR	AR	AR	AR	AR	AR	AR	AR	AR
CRDS	AR	AR	AR	AR	AR	AR	AR	AR	AR	AR
CRDT	AR	AR	AR	AR	AR	AR	AR	AR	AR	AR
CRFB	AR	AR	AR	AR	AR	AR	AR	AR	AR	AR

CRGB	AR	AR	AR	AR	AR	AR	AR	AR	AR	AR
CRGL	AR	AR	AR	AR	AR	AR	AR	AR	AR	AR
CRJK	AR	AR	AR	AR	AR	AR	AR	AR	AR	AR
CRJN	AR	AR	AR	AR	AR	AR	AR	AR	AR	AR
CRKQ	AR	AR	AR	AR	AR	AR	AR	AR	AR	AR
CRNK	AR	AR	AR	AR	AR	AR	AR	AR	AR	AR
CRRZ	AR	AR	AR	AR	AR	AR	AR	AR	AR	AR
CRTT	AR	AR	AR	AR	AR	AR	AR	AR	AR	AR
CRXG	AR	AR	AR	AR	AR	AR	AR	AR	AR	AR
AATE	AR	AR	AR	AR	AR	AR	AR	AR	AR	AR
ABYZ	AR	AR	AR	AR	AR	AR	AR	AR	AR	AR
ABZP	AR	AR	AR	AR	AR	AR	AR	AR	AR	AR
AAGT	AR	AR	AR	AR	AR	AR	AR	AR	AR	AR
AARX	AR	AR	AR	AR	AR	AR	AR	AR	AR	AR
AASY	AR	AR	AR	AR	AR	AR	AR	AR	AR	AR
AATR	AR	AR	AR	AR	AR	AR	AR	AR	AR	AR
ABGB	AR	AR	AR	AR	AR	AR	AR	AR	AR	AR
ABHP	AR	AR	AR	AR	AR	AR	AR	AR	AR	AR
ABKU	AR	AR	AR	AR	AR	AR	AR	AR	AR	AR
ABKV	AR	AR	AR	AR	AR	AR	AR	AR	AR	AR
ABKW	AR	AR	AR	AR	AR	AR	AR	AR	AR	AR
ABMK	AR	AR	AR	AR	AR	AR	AR	AR	AR	AR
ABPR	AR	AR	AR	AR	AR	AR	AR	AR	AR	AR
ABPT	AR	AR	AR	AR	AR	AR	AR	AR	AR	AR
ABQR	AR	AR	AR	AR	AR	AR	AR	AR	AR	AR
ABRC	AR	AR	AR	AR	AR	AR	AR	AR	AR	AR
ABRD	AR	AR	AR	AR	AR	AR	AR	AR	AR	AR
ABTB	AR	AR	AR	AR	AR	AR	AR	AR	AR	AR
ACVR	AR	AR	AR	AR	AR	AR	AR	AR	AR	AR
ADUW	AR	AR	AR	AR	AR	AR	AR	AR	AR	AR
ADUX	AR	AR	AR	AR	AR	AR	AR	AR	AR	AR
AFFL	AR	AR	AR	AR	AR	AR	AR	AR	AR	AR
AGGZ	AR	AR	AR	AR	AR	AR	AR	AR	AR	AR
AGHG	AR	AR	AR	AR	AR	AR	AR	AR	AR	AR
AGPX	AR	AR	AR	AR	AR	AR	AR	AR	AR	AR
AJEK	AR	AR	AR	AR	AR	AR	AR	AR	AR	AR
AJHV	AR	AR	AR	AR	AR	AR	AR	AR	AR	AR
AJHW	AR	AR	AR	AR	AR	AR	AR	AR	AR	AR
AJQL	AR	AR	AR	AR	AR	AR	AR	AR	AR	AR
AJQM	AR	AR	AR	AR	AR	AR	AR	AR	AR	AR
AQZQ	AR	AR	AR	AR	AR	AR	AR	AR	AR	AR
ASDB	AR	AR	AR	AR	AR	AR	AR	AR	AR	AR
BQCT	AR	AR	AR	AR	AR	AR	AR	AR	AR	AR
BXCZ	AR	AR	AR	AR	AR	AR	AR	AR	AR	AR
BZLN	AR	AR	AR	AR	AR	AR	AR	AR	AR	AR
CCFJ	AR	AR	AR	AR	AR	AR	AR	AR	AR	AR
CFNT	AR	AR	AR	AR	AR	AR	AR	AR	AR	AR
CQBH	AR	AR	AR	AR	AR	AR	AR	AR	AR	AR
CQBR	AR	AR	AR	AR	AR	AR	AR	AR	AR	AR
CQBS	AR	AR	AR	AR	AR	AR	AR	AR	AR	AR
CQDD	AR	AR	AR	AR	AR	AR	AR	AR	AR	AR
CQDN	AR	AR	AR	AR	AR	AR	AR	AR	AR	AR
CQJD	AR	AR	AR	AR	AR	AR	AR	AR	AR	AR
CQKD	AR	AR	AR	AR	AR	AR	AR	AR	AR	AR
CQKY	AR	AR	AR	AR	AR	AR	AR	AR	AR	AR
CQMT	AR	AR	AR	AR	AR	AR	AR	AR	AR	AR
CQSH	AR	AR	AR	AR	AR	AR	AR	AR	AR	AR

CQWC	AR	AR	AR	AR	AR	AR	AR	AR	AR	AR
CQZZ	AR	AR	AR	AR	AR	AR	AR	AR	AR	AR
CRBF	AR	AR	AR	AR	AR	AR	AR	AR	AR	AR
CRDH	AR	AR	AR	AR	AR	AR	AR	AR	AR	AR
CRDM	AR	AR	AR	AR	AR	AR	AR	AR	AR	AR
CRGB	AR	AR	AR	AR	AR	AR	AR	AR	AR	AR
CRGK	AR	AR	AR	AR	AR	AR	AR	AR	AR	AR
CRJN	AR	AR	AR	AR	AR	AR	AR	AR	AR	AR
CRKY	AR	AR	AR	AR	AR	AR	AR	AR	AR	AR
CRLF	AR	AR	AR	AR	AR	AR	AR	AR	AR	AR
CRNH	AR	AR	AR	AR	AR	AR	AR	AR	AR	AR
CRYZ	AR	AR	AR	AR	AR	AR	AR	AR	AR	AR
AATA	AR	AR	AR	AR	AR	AR	AR	AR	AR	AR
AATE	AR	AR	AR	AR	AR	AR	AR	AR	AR	AR
ABHP	AR	AR	AR	AR	AR	AR	AR	AR	AR	AR
ABMK	AR	AR	AR	AR	AR	AR	AR	AR	AR	AR
ABTB	AR	AR	AR	AR	AR	AR	AR	AR	AR	AR
CQBX	AR	AR	AR	AR	AR	AR	AR	AR	AR	AR
CQGG	AR	AR	AR	AR	AR	AR	AR	AR	AR	AR
CQKY	AR	AR	AR	AR	AR	AR	AR	AR	AR	AR
CQLL	AR	AR	AR	AR	AR	AR	AR	AR	AR	AR
CRJC	AR	AR	AR	AR	AR	AR	AR	AR	AR	AR
CRLT	AR	AR	AR	AR	AR	AR	AR	AR	AR	AR
CRQT	AR	AR	AR	AR	AR	AR	AR	AR	AR	AR
CRWN	AR	AR	AR	AR	AR	AR	AR	AR	AR	AR
AASY	AR	AR	AR	AR	AR	AR	AR	AR	AR	AR
ABKV	AR	AR	AR	AR	AR	AR	AR	AR	AR	AR
ABKW	AR	AR	AR	AR	AR	AR	AR	AR	AR	AR
ABPR	AR	AR	AR	AR	AR	AR	AR	AR	AR	AR
ABRC	AR	AR	AR	AR	AR	AR	AR	AR	AR	AR
ABRD	AR	AR	AR	AR	AR	AR	AR	AR	AR	AR
ABTB	AR	AR	AR	AR	AR	AR	AR	AR	AR	AR
AFFL	AR	AR	AR	AR	AR	AR	AR	AR	AR	AR
AGML	AR	AR	AR	AR	AR	AR	AR	AR	AR	AR
AGMM	AR	AR	AR	AR	AR	AR	AR	AR	AR	AR
AGPX	AR	AR	AR	AR	AR	AR	AR	AR	AR	AR
AJEK	AR	AR	AR	AR	AR	AR	AR	AR	AR	AR
ASDB	AR	AR	AR	AR	AR	AR	AR	AR	AR	AR
BXCZ	AR	AR	AR	AR	AR	AR	AR	AR	AR	AR
BZLN	AR	AR	AR	AR	AR	AR	AR	AR	AR	AR
CCFJ	AR	AR	AR	AR	AR	AR	AR	AR	AR	AR
CFNT	AR	AR	AR	AR	AR	AR	AR	AR	AR	AR
CQDL	AR	AR	AR	AR	AR	AR	AR	AR	AR	AR
CQDN	AR	AR	AR	AR	AR	AR	AR	AR	AR	AR
CQSH	AR	AR	AR	AR	AR	AR	AR	AR	AR	AR
CQZZ	AR	AR	AR	AR	AR	AR	AR	AR	AR	AR
CRKY	AR	AR	AR	AR	AR	AR	AR	AR	AR	AR
CRTB	AR	AR	AR	AR	AR	AR	AR	AR	AR	AR
CRTT	AR	AR	AR	AR	AR	AR	AR	AR	AR	AR
CRYZ	AR	AR	AR	AR	AR	AR	AR	AR	AR	AR
ACDK	AR	AR	AR	AR	AR	AR	AR	AR	AR	AR
ABKH	AR	AR	AR	AR	AR	AR	AR	AR	AR	AR
ABKU	AR	AR	AR	AR	AR	AR	AR	AR	AR	AR
ABKV	AR	AR	AR	AR	AR	AR	AR	AR	AR	AR
ABTB	AR	AR	AR	AR	AR	AR	AR	AR	AR	AR
AFFL	AR	AR	AR	AR	AR	AR	AR	AR	AR	AR
AGEU	AR	AR	AR	AR	AR	AR	AR	AR	AR	AR

AGGZ	AR	AR	AR	AR	AR	AR	AR	AR	AR	AR
AGPX	AR	AR	AR	AR	AR	AR	AR	AR	AR	AR
AJQL	AR	AR	AR	AR	AR	AR	AR	AR	AR	AR
AJQM	AR	AR	AR	AR	AR	AR	AR	AR	AR	AR
AQZQ	AR	AR	AR	AR	AR	AR	AR	AR	AR	AR
AYGJ	AR	AR	AR	AR	AR	AR	AR	AR	AR	AR
BXCZ	AR	AR	AR	AR	AR	AR	AR	AR	AR	AR
CFNT	AR	AR	AR	AR	AR	AR	AR	AR	AR	AR
CQBR	AR	AR	AR	AR	AR	AR	AR	AR	AR	AR
CQCG	AR	AR	AR	AR	AR	AR	AR	AR	AR	AR
CQLF	AR	AR	AR	AR	AR	AR	AR	AR	AR	AR
CQSF	AR	AR	AR	AR	AR	AR	AR	AR	AR	AR
CRDH	AR	AR	AR	AR	AR	AR	AR	AR	AR	AR
CRJK	AR	AR	AR	AR	AR	AR	AR	AR	AR	AR
CRLF	AR	AR	AR	AR	AR	AR	AR	AR	AR	AR
CRTT	AR	AR	AR	AR	AR	AR	AR	AR	AR	AR
ABKV	AR	AR	AR	AR	AR	AR	AR	AR	AR	AR
ABTB	AR	AR	AR	AR	AR	AR	AR	AR	AR	AR
ALHL	AR	AR	AR	AR	AR	AR	AR	AR	AR	AR
CQBX	AR	AR	AR	AR	AR	AR	AR	AR	AR	AR
CQDN	AR	AR	AR	AR	AR	AR	AR	AR	AR	AR
CRQT	AR	AR	AR	AR	AR	AR	AR	AR	AR	AR
CRWN	AR	AR	AR	AR	AR	AR	AR	AR	AR	AR
CRYZ	AR	AR	AR	AR	AR	AR	AR	AR	AR	AR
ABKV	AR	AR	AR	AR	AR	AR	AR	AR	AR	AR
ABKW	AR	AR	AR	AR	AR	AR	AR	AR	AR	AR
ACXU	AR	AR	AR	AR	AR	AR	AR	AR	AR	AR
ANTS	AR	AR	AR	AR	AR	AR	AR	AR	AR	AR
CQBT	AR	AR	AR	AR	AR	AR	AR	AR	AR	AR
CQDG	AR	AR	AR	AR	AR	AR	AR	AR	AR	AR
CQLL	AR	AR	AR	AR	AR	AR	AR	AR	AR	AR
CRFW	AR	AR	AR	AR	AR	AR	AR	AR	AR	AR
CRLT	AR	AR	AR	AR	AR	AR	AR	AR	AR	AR
CRWC	AR	AR	AR	AR	AR	AR	AR	AR	AR	AR
CSBB	AR	AR	AR	AR	AR	AR	AR	AR	AR	AR
CSCM	AR	AR	AR	AR	AR	AR	AR	AR	AR	AR
ABKV	AR	AR	AR	AR	AR	AR	AR	AR	AR	AR
ABKW	AR	AR	AR	AR	AR	AR	AR	AR	AR	AR
ABTB	AR	AR	AR	AR	AR	AR	AR	AR	AR	AR
AFFL	AR	AR	AR	AR	AR	AR	AR	AR	AR	AR
AGEU	AR	AR	AR	AR	AR	AR	AR	AR	AR	AR
AJQL	AR	AR	AR	AR	AR	AR	AR	AR	AR	AR
CRFB	AR	AR	AR	AR	AR	AR	AR	AR	AR	AR
ABHP	AR	AR	AR	AR	AR	AR	AR	AR	AR	AR
ABKW	AR	AR	AR	AR	AR	AR	AR	AR	AR	AR
ABMK	AR	AR	AR	AR	AR	AR	AR	AR	AR	AR
ABPS	AR	AR	AR	AR	AR	AR	AR	AR	AR	AR
ABPU	AR	AR	AR	AR	AR	AR	AR	AR	AR	AR
ABQR	AR	AR	AR	AR	AR	AR	AR	AR	AR	AR
ABRC	AR	AR	AR	AR	AR	AR	AR	AR	AR	AR
ABRD	AR	AR	AR	AR	AR	AR	AR	AR	AR	AR
ADUW	AR	AR	AR	AR	AR	AR	AR	AR	AR	AR
ADUX	AR	AR	AR	AR	AR	AR	AR	AR	AR	AR
AGHG	AR	AR	AR	AR	AR	AR	AR	AR	AR	AR
AGML	AR	AR	AR	AR	AR	AR	AR	AR	AR	AR
AGMM	AR	AR	AR	AR	AR	AR	AR	AR	AR	AR
AHHG	AR	AR	AR	AR	AR	AR	AR	AR	AR	AR

AHLF	AR	AR	AR	AR	AR	AR	AR	AR	AR	AR
AHQN	AR	AR	AR	AR	AR	AR	AR	AR	AR	AR
AHSJ	AR	AR	AR	AR	AR	AR	AR	AR	AR	AR
AJEK	AR	AR	AR	AR	AR	AR	AR	AR	AR	AR
AJHV	AR	AR	AR	AR	AR	AR	AR	AR	AR	AR
ALHL	AR	AR	AR	AR	AR	AR	AR	AR	AR	AR
BXCZ	AR	AR	AR	AR	AR	AR	AR	AR	AR	AR
CFNT	AR	AR	AR	AR	AR	AR	AR	AR	AR	AR
CQBH	AR	AR	AR	AR	AR	AR	AR	AR	AR	AR
CQBW	AR	AR	AR	AR	AR	AR	AR	AR	AR	AR
CQBZ	AR	AR	AR	AR	AR	AR	AR	AR	AR	AR
CQDH	AR	AR	AR	AR	AR	AR	AR	AR	AR	AR
CQDL	AR	AR	AR	AR	AR	AR	AR	AR	AR	AR
CQDN	AR	AR	AR	AR	AR	AR	AR	AR	AR	AR
CQFP	AR	AR	AR	AR	AR	AR	AR	AR	AR	AR
CQGL	AR	AR	AR	AR	AR	AR	AR	AR	AR	AR
CQHX	AR	AR	AR	AR	AR	AR	AR	AR	AR	AR
CQLM	AR	AR	AR	AR	AR	AR	AR	AR	AR	AR
CQSH	AR	AR	AR	AR	AR	AR	AR	AR	AR	AR
CQWC	AR	AR	AR	AR	AR	AR	AR	AR	AR	AR
CRKC	AR	AR	AR	AR	AR	AR	AR	AR	AR	AR
CRKH	AR	AR	AR	AR	AR	AR	AR	AR	AR	AR
CRKY	AR	AR	AR	AR	AR	AR	AR	AR	AR	AR
CRPR	AR	AR	AR	AR	AR	AR	AR	AR	AR	AR
CRRS	AR	AR	AR	AR	AR	AR	AR	AR	AR	AR
CRTB	AR	AR	AR	AR	AR	AR	AR	AR	AR	AR
CRTH	AR	AR	AR	AR	AR	AR	AR	AR	AR	AR
CRTT	AR	AR	AR	AR	AR	AR	AR	AR	AR	AR
CRWK	AR	AR	AR	AR	AR	AR	AR	AR	AR	AR
CRYN	AR	AR	AR	AR	AR	AR	AR	AR	AR	AR
CRYZ	AR	AR	AR	AR	AR	AR	AR	AR	AR	AR
CSBM	AR	AR	AR	AR	AR	AR	AR	AR	AR	AR
CSBN	AR	AR	AR	AR	AR	AR	AR	AR	AR	AR
CSCT	AR	AR	AR	AR	AR	AR	AR	AR	AR	AR
CSDB	AR	AR	AR	AR	AR	AR	AR	AR	AR	AR
CSDD	AR	AR	AR	AR	AR	AR	AR	AR	AR	AR
CSDM	AR	AR	AR	AR	AR	AR	AR	AR	AR	AR
AATA	AR	AR	AR	AR	AR	AR	AR	AR	AR	AR
AATE	AR	AR	AR	AR	AR	AR	AR	AR	AR	AR
ACDK	AR	AR	AR	AR	AR	AR	AR	AR	AR	AR
ACDL	AR	AR	AR	AR	AR	AR	AR	AR	AR	AR
ACDM	AR	AR	AR	AR	AR	AR	AR	AR	AR	AR
ACEV	AR	AR	AR	AR	AR	AR	AR	AR	AR	AR
ABHP	AR	AR	AR	AR	AR	AR	AR	AR	AR	AR
ABKV	AR	AR	AR	AR	AR	AR	AR	AR	AR	AR
ABKW	AR	AR	AR	AR	AR	AR	AR	AR	AR	AR
ABMK	AR	AR	AR	AR	AR	AR	AR	AR	AR	AR
CQBH	AR	AR	AR	AR	AR	AR	AR	AR	AR	AR
CRLT	AR	AR	AR	AR	AR	AR	AR	AR	AR	AR
CRZZ	AR	AR	AR	AR	AR	AR	AR	AR	AR	AR
CSBD	AR	AR	AR	AR	AR	AR	AR	AR	AR	AR
AATR	AR	AR	AR	AR	AR	AR	AR	AR	AR	AR
ABGB	AR	AR	AR	AR	AR	AR	AR	AR	AR	AR
ABHP	AR	AR	AR	AR	AR	AR	AR	AR	AR	AR
ABKU	AR	AR	AR	AR	AR	AR	AR	AR	AR	AR
ABKV	AR	AR	AR	AR	AR	AR	AR	AR	AR	AR
ABKW	AR	AR	AR	AR	AR	AR	AR	AR	AR	AR

ABMK	AR	AR	AR	AR	AR	AR	AR	AR	AR	AR
ABPS	AR	AR	AR	AR	AR	AR	AR	AR	AR	AR
ABPU	AR	AR	AR	AR	AR	AR	AR	AR	AR	AR
ABQR	AR	AR	AR	AR	AR	AR	AR	AR	AR	AR
ABRC	AR	AR	AR	AR	AR	AR	AR	AR	AR	AR
ABRD	AR	AR	AR	AR	AR	AR	AR	AR	AR	AR
ABTB	AR	AR	AR	AR	AR	AR	AR	AR	AR	AR
ADEM	AR	AR	AR	AR	AR	AR	AR	AR	AR	AR
ADUW	AR	AR	AR	AR	AR	AR	AR	AR	AR	AR
ADUX	AR	AR	AR	AR	AR	AR	AR	AR	AR	AR
AFFL	AR	AR	AR	AR	AR	AR	AR	AR	AR	AR
AGEU	AR	AR	AR	AR	AR	AR	AR	AR	AR	AR
AGGZ	AR	AR	AR	AR	AR	AR	AR	AR	AR	AR
AHSJ	AR	AR	AR	AR	AR	AR	AR	AR	AR	AR
AJCZ	AR	AR	AR	AR	AR	AR	AR	AR	AR	AR
AJHW	AR	AR	AR	AR	AR	AR	AR	AR	AR	AR
AJQL	AR	AR	AR	AR	AR	AR	AR	AR	AR	AR
AJWR	AR	AR	AR	AR	AR	AR	AR	AR	AR	AR
ASDB	AR	AR	AR	AR	AR	AR	AR	AR	AR	AR
AYGJ	AR	AR	AR	AR	AR	AR	AR	AR	AR	AR
BGJZ	AR	AR	AR	AR	AR	AR	AR	AR	AR	AR
BQCT	AR	AR	AR	AR	AR	AR	AR	AR	AR	AR
BTPG	AR	AR	AR	AR	AR	AR	AR	AR	AR	AR
BXCZ	AR	AR	AR	AR	AR	AR	AR	AR	AR	AR
CFNT	AR	AR	AR	AR	AR	AR	AR	AR	AR	AR
CQBH	AR	AR	AR	AR	AR	AR	AR	AR	AR	AR
CQCL	AR	AR	AR	AR	AR	AR	AR	AR	AR	AR
CQDD	AR	AR	AR	AR	AR	AR	AR	AR	AR	AR
CQDL	AR	AR	AR	AR	AR	AR	AR	AR	AR	AR
CQDN	AR	AR	AR	AR	AR	AR	AR	AR	AR	AR
CQFS	AR	AR	AR	AR	AR	AR	AR	AR	AR	AR
CQHX	AR	AR	AR	AR	AR	AR	AR	AR	AR	AR
CQKY	AR	AR	AR	AR	AR	AR	AR	AR	AR	AR
CQLF	AR	AR	AR	AR	AR	AR	AR	AR	AR	AR
CQSH	AR	AR	AR	AR	AR	AR	AR	AR	AR	AR
CRGB	AR	AR	AR	AR	AR	AR	AR	AR	AR	AR
CRJL	AR	AR	AR	AR	AR	AR	AR	AR	AR	AR
CRJN	AR	AR	AR	AR	AR	AR	AR	AR	AR	AR
CRKC	AR	AR	AR	AR	AR	AR	AR	AR	AR	AR
CRKY	AR	AR	AR	AR	AR	AR	AR	AR	AR	AR
CRLT	AR	AR	AR	AR	AR	AR	AR	AR	AR	AR
CRPR	AR	AR	AR	AR	AR	AR	AR	AR	AR	AR
CRTB	AR	AR	AR	AR	AR	AR	AR	AR	AR	AR
CRXQ	AR	AR	AR	AR	AR	AR	AR	AR	AR	AR
CRYZ	AR	AR	AR	AR	AR	AR	AR	AR	AR	AR
CRZZ	AR	AR	AR	AR	AR	AR	AR	AR	AR	AR
CSBD	AR	AR	AR	AR	AR	AR	AR	AR	AR	AR
CSBN	AR	AR	AR	AR	AR	AR	AR	AR	AR	AR
CSBZ	AR	AR	AR	AR	AR	AR	AR	AR	AR	AR
CSDJ	AR	AR	AR	AR	AR	AR	AR	AR	AR	AR
AATA	AR	AR	AR	AR	AR	AR	AR	AR	AR	AR
ACDK	AR	AR	AR	AR	AR	AR	AR	AR	AR	AR
AATR	AR	AR	AR	AR	AR	AR	AR	AR	AR	AR
ABHP	AR	AR	AR	AR	AR	AR	AR	AR	AR	AR
ABKV	AR	AR	AR	AR	AR	AR	AR	AR	AR	AR
ABKW	AR	AR	AR	AR	AR	AR	AR	AR	AR	AR
ABMK	AR	AR	AR	AR	AR	AR	AR	AR	AR	AR

ABTB	AR	AR	AR	AR	AR	AR	AR	AR	AR	AR
ADMT	AR	AR	AR	AR	AR	AR	AR	AR	AR	AR
AGGZ	AR	AR	AR	AR	AR	AR	AR	AR	AR	AR
AJHV	AR	AR	AR	AR	AR	AR	AR	AR	AR	AR
AJHW	AR	AR	AR	AR	AR	AR	AR	AR	AR	AR
ALHL	AR	AR	AR	AR	AR	AR	AR	AR	AR	AR
ANTS	AR	AR	AR	AR	AR	AR	AR	AR	AR	AR
CBYW	AR	AR	AR	AR	AR	AR	AR	AR	AR	AR
CQBH	AR	AR	AR	AR	AR	AR	AR	AR	AR	AR
CQBY	AR	AR	AR	AR	AR	AR	AR	AR	AR	AR
CQCQ	AR	AR	AR	AR	AR	AR	AR	AR	AR	AR
CQDN	AR	AR	AR	AR	AR	AR	AR	AR	AR	AR
CQFS	AR	AR	AR	AR	AR	AR	AR	AR	AR	AR
CQGG	AR	AR	AR	AR	AR	AR	AR	AR	AR	AR
CQGL	AR	AR	AR	AR	AR	AR	AR	AR	AR	AR
CQHX	AR	AR	AR	AR	AR	AR	AR	AR	AR	AR
CQMH	AR	AR	AR	AR	AR	AR	AR	AR	AR	AR
CRDK	AR	AR	AR	AR	AR	AR	AR	AR	AR	AR
CRFC	AR	AR	AR	AR	AR	AR	AR	AR	AR	AR
CRJC	AR	AR	AR	AR	AR	AR	AR	AR	AR	AR
CRKD	AR	AR	AR	AR	AR	AR	AR	AR	AR	AR
CRLT	AR	AR	AR	AR	AR	AR	AR	AR	AR	AR
CRYZ	AR	AR	AR	AR	AR	AR	AR	AR	AR	AR
CRZZ	AR	AR	AR	AR	AR	AR	AR	AR	AR	AR
CSBB	AR	AR	AR	AR	AR	AR	AR	AR	AR	AR
CSBD	AR	AR	AR	AR	AR	AR	AR	AR	AR	AR
CSBF	AR	AR	AR	AR	AR	AR	AR	AR	AR	AR
CSBY	AR	AR	AR	AR	AR	AR	AR	AR	AR	AR
CSCT	AR	AR	AR	AR	AR	AR	AR	AR	AR	AR
ABKV	AR	AR	AR	AR	AR	AR	AR	AR	AR	AR
ABKW	AR	AR	AR	AR	AR	AR	AR	AR	AR	AR
ABTB	AR	AR	AR	AR	AR	AR	AR	AR	AR	AR
ABVV	AR	AR	AR	AR	AR	AR	AR	AR	AR	AR
AHHG	AR	AR	AR	AR	AR	AR	AR	AR	AR	AR
AHSJ	AR	AR	AR	AR	AR	AR	AR	AR	AR	AR
CQKY	AR	AR	AR	AR	AR	AR	AR	AR	AR	AR
CRTW	AR	AR	AR	AR	AR	AR	AR	AR	AR	AR
AARX	AR	AR	AR	AR	AR	AR	AR	AR	AR	AR
ABKV	AR	AR	AR	AR	AR	AR	AR	AR	AR	AR
ABKW	AR	AR	AR	AR	AR	AR	AR	AR	AR	AR
CQBS	AR	AR	AR	AR	AR	AR	AR	AR	AR	AR
CQGL	AR	AR	AR	AR	AR	AR	AR	AR	AR	AR
CRBF	AR	AR	AR	AR	AR	AR	AR	AR	AR	AR
CSCT	AR	AR	AR	AR	AR	AR	AR	AR	AR	AR
AATE	AR	AR	AR	AR	AR	AR	AR	AR	AR	AR
BSPB	AR	AR	AR	AR	AR	AR	AR	AR	AR	AR
MTLC	X	X	X	X	X	X	X	X	X	X
STLC	AR	AR	AR	AR	AR	AR	AR	AR	AR	AR
AAPC	AR	AR	AR	AR	AR	AR	AR	AR	AR	AR
UKBG	AR	AR	AR	AR	AR	AR	AR	AR	AR	AR
AXHR		AR	AR	AR		AR	AR	AR	AR	
ABGX		AR		AR		AR	AR	AR	AR	
CQBP		AR	AR	AR		AR	AR	AR	AR	
CRFL		AR	AR	AR		AR	AR	AR	AR	
CQTP		AR	AR	AR		AR	AR	AR	AR	
CRPG		AR	AR	AR		AR	AR	AR	AR	
CQQR		AR	AR	AR		AR	AR	AR	AR	

CTTC		AR	AR	AR		AR	AR	AR	AR	
CQJM		AR	AR	AR		AR	AR	AR	AR	
CRBM				AR				AR		
AAKV				AR				AR		
ACHF		AR				AR				
MARK	AR	AR	AR	AR	AR	AR	AR	AR	AR	AR
CBBL	AR	AR	AR	AR	AR	AR	AR	AR	AR	AR
FEAT	AR	AR	AR	AR	AR	AR	AR	AR	AR	AR
TEST	AR	AR	AR	AR	AR	AR	AR	AR	AR	AR
SPCL	AR	AR	AR	AR	AR	AR	AR	AR	AR	AR
ZZZK	AR	AR	AR	AR	AR	AR	AR	AR	AR	AR
ZZZT	AR	AR	AR	AR	AR	AR	AR	AR	AR	AR
ZZZW	AR	AR	AR	AR	AR	AR	AR	AR	AR	AR
ZZZX	AR	AR	AR	AR	AR	AR	AR	AR	AR	AR
ZZZY	AR	AR	AR	AR	AR	AR	AR	AR	AR	AR
CRTL	AR	AR	AR	AR	AR	AR	AR	AR	AR	AR
PRPY	AR	AR	AR	AR	AR	AR	AR	AR	AR	AR
ENAC	AR	AR	AR	AR	AR	AR	AR	AR	AR	AR
BDPK	AR	AR	AR	AR	AR	AR	AR	AR	AR	AR
ELRN	AR	AR	AR	AR	AR	AR	AR	AR	AR	AR
ELCD	AR	AR	AR	AR	AR	AR	AR	AR	AR	AR
TMQY	AR	AR	AR	AR	AR	AR	AR	AR	AR	AR
ADZC	AR	AR	AR	AR	AR	AR	AR	AR	AR	AR
AFJN	AR	AR	AR	AR	AR	AR	AR	AR	AR	AR
PMLC	AR	AR	AR	AR	AR	AR	AR	AR	AR	AR
PMWT	AR	AR	AR	AR	AR	AR	AR	AR	AR	AR
PRMT	AR	AR	AR	AR	AR	AR	AR	AR	AR	AR
SUPP	AR	AR	AR	AR	AR	AR	AR	AR	AR	AR
ZZZP	AR	AR	AR	AR	AR	AR	AR	AR	AR	AR
AGAV	AR	AR	AR	AR	AR	AR	AR	AR	AR	AR
CXCY	AR	AR	AR	AR	AR	AR	AR	AR	AR	AR
HZRD	AR	AR	AR	AR	AR	AR	AR	AR	AR	AR

	L	M	N	P	Q
NAME	X	X	X	X	X
STYL	X	X	X	X	X
AARX	AR	AR	AR	AR	AR
ABKV	AR	AR	AR	AR	AR
ABKW	AR	AR	AR	AR	AR
AJQL	AR	AR	AR	AR	AR
ALHL	AR	AR	AR	AR	AR
CQBH	AR	AR	AR	AR	AR
CQLM	AR	AR	AR	AR	AR
CRWK	AR	AR	AR	AR	AR
ABGA	AR	AR	AR	AR	AR
ABHP	AR	AR	AR	AR	AR
ABKU	AR	AR	AR	AR	AR
ABKV	AR	AR	AR	AR	AR
ABKW	AR	AR	AR	AR	AR
ABMK	AR	AR	AR	AR	AR
ABTB	AR	AR	AR	AR	AR
ADUW	AR	AR	AR	AR	AR
ADUX	AR	AR	AR	AR	AR
AFFL	AR	AR	AR	AR	AR
AGHG	AR	AR	AR	AR	AR
AGPX	AR	AR	AR	AR	AR
AJQL	AR	AR	AR	AR	AR
AJQM	AR	AR	AR	AR	AR
AYGJ	AR	AR	AR	AR	AR
BGJZ	AR	AR	AR	AR	AR
BQCT	AR	AR	AR	AR	AR
BXCZ	AR	AR	AR	AR	AR
CFNT	AR	AR	AR	AR	AR
CQBJ	AR	AR	AR	AR	AR
CQBL	AR	AR	AR	AR	AR
CQBM	AR	AR	AR	AR	AR
CQBR	AR	AR	AR	AR	AR
CQDD	AR	AR	AR	AR	AR
CQDM	AR	AR	AR	AR	AR
CQFZ	AR	AR	AR	AR	AR
CQHB	AR	AR	AR	AR	AR
CQHR	AR	AR	AR	AR	AR
CQKY	AR	AR	AR	AR	AR
CQLF	AR	AR	AR	AR	AR
CQLJ	AR	AR	AR	AR	AR
CQPP	AR	AR	AR	AR	AR
CQSF	AR	AR	AR	AR	AR
CRCX	AR	AR	AR	AR	AR
CRDH	AR	AR	AR	AR	AR
CRDS	AR	AR	AR	AR	AR
CRDT	AR	AR	AR	AR	AR
CRFB	AR	AR	AR	AR	AR
CRGB	AR	AR	AR	AR	AR
CRGL	AR	AR	AR	AR	AR
CRJK	AR	AR	AR	AR	AR
CRJN	AR	AR	AR	AR	AR
CRKQ	AR	AR	AR	AR	AR

CRNK	AR	AR	AR	AR	AR
CRRZ	AR	AR	AR	AR	AR
CRTT	AR	AR	AR	AR	AR
CRXG	AR	AR	AR	AR	AR
AATE	AR	AR	AR	AR	AR
ABYZ	AR	AR	AR	AR	AR
ABZP	AR	AR	AR	AR	AR
AAGT	AR	AR	AR	AR	AR
AARX	AR	AR	AR	AR	AR
AASY	AR	AR	AR	AR	AR
AATR	AR	AR	AR	AR	AR
ABGB	AR	AR	AR	AR	AR
ABHP	AR	AR	AR	AR	AR
ABKU	AR	AR	AR	AR	AR
ABKV	AR	AR	AR	AR	AR
ABKW	AR	AR	AR	AR	AR
ABMK	AR	AR	AR	AR	AR
ABPR	AR	AR	AR	AR	AR
ABPT	AR	AR	AR	AR	AR
ABQR	AR	AR	AR	AR	AR
ABRC	AR	AR	AR	AR	AR
ABRD	AR	AR	AR	AR	AR
ABTB	AR	AR	AR	AR	AR
ACVR	AR	AR	AR	AR	AR
ADUW	AR	AR	AR	AR	AR
ADUX	AR	AR	AR	AR	AR
AFFL	AR	AR	AR	AR	AR
AGGZ	AR	AR	AR	AR	AR
AGHG	AR	AR	AR	AR	AR
AGPX	AR	AR	AR	AR	AR
AJEK	AR	AR	AR	AR	AR
AJHV	AR	AR	AR	AR	AR
AJHW	AR	AR	AR	AR	AR
AJQL	AR	AR	AR	AR	AR
AJQM	AR	AR	AR	AR	AR
AQZQ	AR	AR	AR	AR	AR
ASDB	AR	AR	AR	AR	AR
BQCT	AR	AR	AR	AR	AR
BXCZ	AR	AR	AR	AR	AR
BZLN	AR	AR	AR	AR	AR
CCFJ	AR	AR	AR	AR	AR
CFNT	AR	AR	AR	AR	AR
CQBH	AR	AR	AR	AR	AR
CQBR	AR	AR	AR	AR	AR
CQBS	AR	AR	AR	AR	AR
CQDD	AR	AR	AR	AR	AR
CQDN	AR	AR	AR	AR	AR
CQJD	AR	AR	AR	AR	AR
CQKD	AR	AR	AR	AR	AR
CQKY	AR	AR	AR	AR	AR
CQMT	AR	AR	AR	AR	AR
CQSH	AR	AR	AR	AR	AR
CQWC	AR	AR	AR	AR	AR
CQZZ	AR	AR	AR	AR	AR
CRBF	AR	AR	AR	AR	AR
CRDH	AR	AR	AR	AR	AR
CRDM	AR	AR	AR	AR	AR

CRGB	AR	AR	AR	AR	AR
CRGK	AR	AR	AR	AR	AR
CRJN	AR	AR	AR	AR	AR
CRKY	AR	AR	AR	AR	AR
CRLF	AR	AR	AR	AR	AR
CRNH	AR	AR	AR	AR	AR
CRYZ	AR	AR	AR	AR	AR
AATA	AR	AR	AR	AR	AR
AATE	AR	AR	AR	AR	AR
ABHP	AR	AR	AR	AR	AR
ABMK	AR	AR	AR	AR	AR
ABTB	AR	AR	AR	AR	AR
CQBX	AR	AR	AR	AR	AR
CQGG	AR	AR	AR	AR	AR
CQKY	AR	AR	AR	AR	AR
CQLL	AR	AR	AR	AR	AR
CRJC	AR	AR	AR	AR	AR
CRLT	AR	AR	AR	AR	AR
CRQT	AR	AR	AR	AR	AR
CRWN	AR	AR	AR	AR	AR
AASY	AR	AR	AR	AR	AR
ABKV	AR	AR	AR	AR	AR
ABKW	AR	AR	AR	AR	AR
ABPR	AR	AR	AR	AR	AR
ABRC	AR	AR	AR	AR	AR
ABRD	AR	AR	AR	AR	AR
ABTB	AR	AR	AR	AR	AR
AFFL	AR	AR	AR	AR	AR
AGML	AR	AR	AR	AR	AR
AGMM	AR	AR	AR	AR	AR
AGPX	AR	AR	AR	AR	AR
AJEK	AR	AR	AR	AR	AR
ASDB	AR	AR	AR	AR	AR
BXCZ	AR	AR	AR	AR	AR
BZLN	AR	AR	AR	AR	AR
CCFJ	AR	AR	AR	AR	AR
CFNT	AR	AR	AR	AR	AR
CQDL	AR	AR	AR	AR	AR
CQDN	AR	AR	AR	AR	AR
CQSH	AR	AR	AR	AR	AR
CQZZ	AR	AR	AR	AR	AR
CRKY	AR	AR	AR	AR	AR
CRTB	AR	AR	AR	AR	AR
CRTT	AR	AR	AR	AR	AR
CRYZ	AR	AR	AR	AR	AR
ACDK	AR	AR	AR	AR	AR
ABKH	AR	AR	AR	AR	AR
ABKU	AR	AR	AR	AR	AR
ABKV	AR	AR	AR	AR	AR
ABTB	AR	AR	AR	AR	AR
AFFL	AR	AR	AR	AR	AR
AGEU	AR	AR	AR	AR	AR
AGGZ	AR	AR	AR	AR	AR
AGPX	AR	AR	AR	AR	AR
AJQL	AR	AR	AR	AR	AR
AJQM	AR	AR	AR	AR	AR
AQZQ	AR	AR	AR	AR	AR

AYGJ	AR	AR	AR	AR	AR
BXCZ	AR	AR	AR	AR	AR
CFNT	AR	AR	AR	AR	AR
CQBR	AR	AR	AR	AR	AR
CQCG	AR	AR	AR	AR	AR
CQLF	AR	AR	AR	AR	AR
CQSF	AR	AR	AR	AR	AR
CRDH	AR	AR	AR	AR	AR
CRJK	AR	AR	AR	AR	AR
CRLF	AR	AR	AR	AR	AR
CRTT	AR	AR	AR	AR	AR
ABKV	AR	AR	AR	AR	AR
ABTB	AR	AR	AR	AR	AR
ALHL	AR	AR	AR	AR	AR
CQBX	AR	AR	AR	AR	AR
CQDN	AR	AR	AR	AR	AR
CRQT	AR	AR	AR	AR	AR
CRWN	AR	AR	AR	AR	AR
CRYZ	AR	AR	AR	AR	AR
ABKV	AR	AR	AR	AR	AR
ABKW	AR	AR	AR	AR	AR
ACXU	AR	AR	AR	AR	AR
ANTS	AR	AR	AR	AR	AR
CQBT	AR	AR	AR	AR	AR
CQDG	AR	AR	AR	AR	AR
CQLL	AR	AR	AR	AR	AR
CRFW	AR	AR	AR	AR	AR
CRLT	AR	AR	AR	AR	AR
CRWC	AR	AR	AR	AR	AR
CSBB	AR	AR	AR	AR	AR
CSCM	AR	AR	AR	AR	AR
ABKV	AR	AR	AR	AR	AR
ABKW	AR	AR	AR	AR	AR
ABTB	AR	AR	AR	AR	AR
AFFL	AR	AR	AR	AR	AR
AGEU	AR	AR	AR	AR	AR
AJQL	AR	AR	AR	AR	AR
CRFB	AR	AR	AR	AR	AR
ABHP	AR	AR	AR	AR	AR
ABKW	AR	AR	AR	AR	AR
ABMK	AR	AR	AR	AR	AR
ABPS	AR	AR	AR	AR	AR
ABPU	AR	AR	AR	AR	AR
ABQR	AR	AR	AR	AR	AR
ABRC	AR	AR	AR	AR	AR
ABRD	AR	AR	AR	AR	AR
ADUW	AR	AR	AR	AR	AR
ADUX	AR	AR	AR	AR	AR
AGHG	AR	AR	AR	AR	AR
AGML	AR	AR	AR	AR	AR
AGMM	AR	AR	AR	AR	AR
AHHG	AR	AR	AR	AR	AR
AHLF	AR	AR	AR	AR	AR
AHQN	AR	AR	AR	AR	AR
AHSJ	AR	AR	AR	AR	AR
AJEK	AR	AR	AR	AR	AR
AJHV	AR	AR	AR	AR	AR

ALHL	AR	AR	AR	AR	AR
BXCZ	AR	AR	AR	AR	AR
CFNT	AR	AR	AR	AR	AR
CQBH	AR	AR	AR	AR	AR
CQBW	AR	AR	AR	AR	AR
CQBZ	AR	AR	AR	AR	AR
CQDH	AR	AR	AR	AR	AR
CQDL	AR	AR	AR	AR	AR
CQDN	AR	AR	AR	AR	AR
CQFP	AR	AR	AR	AR	AR
CQGL	AR	AR	AR	AR	AR
CQHX	AR	AR	AR	AR	AR
CQLM	AR	AR	AR	AR	AR
CQSH	AR	AR	AR	AR	AR
CQWC	AR	AR	AR	AR	AR
CRKC	AR	AR	AR	AR	AR
CRKH	AR	AR	AR	AR	AR
CRKY	AR	AR	AR	AR	AR
CRPR	AR	AR	AR	AR	AR
CRRS	AR	AR	AR	AR	AR
CRTB	AR	AR	AR	AR	AR
CRTH	AR	AR	AR	AR	AR
CRTT	AR	AR	AR	AR	AR
CRWK	AR	AR	AR	AR	AR
CRYN	AR	AR	AR	AR	AR
CRYZ	AR	AR	AR	AR	AR
CSBM	AR	AR	AR	AR	AR
CSBN	AR	AR	AR	AR	AR
CSCT	AR	AR	AR	AR	AR
CSDB	AR	AR	AR	AR	AR
CSDD	AR	AR	AR	AR	AR
CSDM	AR	AR	AR	AR	AR
AATA	AR	AR	AR	AR	AR
AATE	AR	AR	AR	AR	AR
ACDK	AR	AR	AR	AR	AR
ACDL	AR	AR	AR	AR	AR
ACDM	AR	AR	AR	AR	AR
ACEV	AR	AR	AR	AR	AR
ABHP	AR	AR	AR	AR	AR
ABKV	AR	AR	AR	AR	AR
ABKW	AR	AR	AR	AR	AR
ABMK	AR	AR	AR	AR	AR
CQBH	AR	AR	AR	AR	AR
CRLT	AR	AR	AR	AR	AR
CRZZ	AR	AR	AR	AR	AR
CSBD	AR	AR	AR	AR	AR
AATR	AR	AR	AR	AR	AR
ABGB	AR	AR	AR	AR	AR
ABHP	AR	AR	AR	AR	AR
ABKU	AR	AR	AR	AR	AR
ABKV	AR	AR	AR	AR	AR
ABKW	AR	AR	AR	AR	AR
ABMK	AR	AR	AR	AR	AR
ABPS	AR	AR	AR	AR	AR
ABPU	AR	AR	AR	AR	AR
ABQR	AR	AR	AR	AR	AR
ABRC	AR	AR	AR	AR	AR

ABRD	AR	AR	AR	AR	AR
ABTB	AR	AR	AR	AR	AR
ADEM	AR	AR	AR	AR	AR
ADUW	AR	AR	AR	AR	AR
ADUX	AR	AR	AR	AR	AR
AFFL	AR	AR	AR	AR	AR
AGEU	AR	AR	AR	AR	AR
AGGZ	AR	AR	AR	AR	AR
AHSJ	AR	AR	AR	AR	AR
AJCZ	AR	AR	AR	AR	AR
AJHW	AR	AR	AR	AR	AR
AJQL	AR	AR	AR	AR	AR
AJWR	AR	AR	AR	AR	AR
ASDB	AR	AR	AR	AR	AR
AYGJ	AR	AR	AR	AR	AR
BGJZ	AR	AR	AR	AR	AR
BQCT	AR	AR	AR	AR	AR
BTPG	AR	AR	AR	AR	AR
BXCZ	AR	AR	AR	AR	AR
CFNT	AR	AR	AR	AR	AR
CQBH	AR	AR	AR	AR	AR
CQCL	AR	AR	AR	AR	AR
CQDD	AR	AR	AR	AR	AR
CQDL	AR	AR	AR	AR	AR
CQDN	AR	AR	AR	AR	AR
CQFS	AR	AR	AR	AR	AR
CQHX	AR	AR	AR	AR	AR
CQKY	AR	AR	AR	AR	AR
CQLF	AR	AR	AR	AR	AR
CQSH	AR	AR	AR	AR	AR
CRGB	AR	AR	AR	AR	AR
CRJL	AR	AR	AR	AR	AR
CRJN	AR	AR	AR	AR	AR
CRKC	AR	AR	AR	AR	AR
CRKY	AR	AR	AR	AR	AR
CRLT	AR	AR	AR	AR	AR
CRPR	AR	AR	AR	AR	AR
CRTB	AR	AR	AR	AR	AR
CRXQ	AR	AR	AR	AR	AR
CRYZ	AR	AR	AR	AR	AR
CRZZ	AR	AR	AR	AR	AR
CSBD	AR	AR	AR	AR	AR
CSBN	AR	AR	AR	AR	AR
CSBZ	AR	AR	AR	AR	AR
CSDJ	AR	AR	AR	AR	AR
AATA	AR	AR	AR	AR	AR
ACDK	AR	AR	AR	AR	AR
AATR	AR	AR	AR	AR	AR
ABHP	AR	AR	AR	AR	AR
ABKV	AR	AR	AR	AR	AR
ABKW	AR	AR	AR	AR	AR
ABMK	AR	AR	AR	AR	AR
ABTB	AR	AR	AR	AR	AR
ADMT	AR	AR	AR	AR	AR
AGGZ	AR	AR	AR	AR	AR
AJHV	AR	AR	AR	AR	AR
AJHW	AR	AR	AR	AR	AR

ALHL	AR	AR	AR	AR	AR
ANTS	AR	AR	AR	AR	AR
CBYW	AR	AR	AR	AR	AR
CQBH	AR	AR	AR	AR	AR
CQBY	AR	AR	AR	AR	AR
CQCQ	AR	AR	AR	AR	AR
CQDN	AR	AR	AR	AR	AR
CQFS	AR	AR	AR	AR	AR
CQGG	AR	AR	AR	AR	AR
CQGL	AR	AR	AR	AR	AR
CQHX	AR	AR	AR	AR	AR
CQMH	AR	AR	AR	AR	AR
CRDK	AR	AR	AR	AR	AR
CRFC	AR	AR	AR	AR	AR
CRJC	AR	AR	AR	AR	AR
CRKD	AR	AR	AR	AR	AR
CRLT	AR	AR	AR	AR	AR
CRYZ	AR	AR	AR	AR	AR
CRZZ	AR	AR	AR	AR	AR
CSBB	AR	AR	AR	AR	AR
CSBD	AR	AR	AR	AR	AR
CSBF	AR	AR	AR	AR	AR
CSBY	AR	AR	AR	AR	AR
CSCT	AR	AR	AR	AR	AR
ABKV	AR	AR	AR	AR	AR
ABKW	AR	AR	AR	AR	AR
ABTB	AR	AR	AR	AR	AR
ABVV	AR	AR	AR	AR	AR
AHHG	AR	AR	AR	AR	AR
AHSJ	AR	AR	AR	AR	AR
CQKY	AR	AR	AR	AR	AR
CRTW	AR	AR	AR	AR	AR
AARX	AR	AR	AR	AR	AR
ABKV	AR	AR	AR	AR	AR
ABKW	AR	AR	AR	AR	AR
CQBS	AR	AR	AR	AR	AR
CQGL	AR	AR	AR	AR	AR
CRBF	AR	AR	AR	AR	AR
CSCT	AR	AR	AR	AR	AR
AATE	AR	AR	AR	AR	AR
BSPB	AR	AR	AR	AR	AR
MTLC	X	X	X	X	X
STLC	AR	AR	AR	AR	AR
AAPC	AR	AR	AR	AR	AR
UKBG	AR	AR	AR	AR	AR
AXHR	AR	AR	AR	AR	
ABGX	AR	AR	AR	AR	
CQBP	AR	AR	AR	AR	
CRFL	AR	AR	AR	AR	
CQTP	AR	AR	AR	AR	
CRPG	AR	AR	AR	AR	
CQQR	AR	AR	AR	AR	
CTTC	AR	AR	AR	AR	
CQJM	AR	AR	AR	AR	
MARK	AR	AR	AR	AR	AR
CBBL	AR	AR	AR	AR	AR
FEAT	AR	AR	AR	AR	AR

TEST	AR	AR	AR	AR	AR
SPCL	AR	AR	AR	AR	AR
ZZZK	AR	AR	AR	AR	AR
ZZZT	AR	AR	AR	AR	AR
ZZZW	AR	AR	AR	AR	AR
ZZZX	AR	AR	AR	AR	AR
ZZZY	AR	AR	AR	AR	AR
CRTL	AR	AR	AR	AR	AR
PRPY	AR	AR	AR	AR	AR
ENAC	AR	AR	AR	AR	AR
BDPK	AR	AR	AR	AR	AR
ELRN	AR	AR	AR	AR	AR
ELCD	AR	AR	AR	AR	AR
TMQY	AR	AR	AR	AR	AR
ADZC	AR	AR	AR	AR	AR
AFJN	AR	AR	AR	AR	AR
PMLC	AR	AR	AR	AR	AR
PMWT	AR	AR	AR	AR	AR
PRMT	AR	AR	AR	AR	AR
SUPP	AR	AR	AR	AR	AR
ZZZP	AR	AR	AR	AR	AR
AGAV	AR	AR	AR	AR	AR
CXCY	AR	AR	AR	AR	AR
HZRD	AR	AR	AR	AR	AR

SECTION I

APP Key	MRC	Mode Code	Requirements
ALL			
	NAME	D	ITEM NAME

Definition: A NOUN, WITH OR WITHOUT MODIFIERS, BY WHICH AN ITEM OF SUPPLY IS KNOWN.

Reply Instructions: Enter the applicable Item Name Code from the index appearing in the General Information. (e.g., NAMED18283*)

ALL

STYL	L	STYLE DESIGNATOR

Definition: THE STYLE DESIGNATION INDICATING THE CONFIGURATION THAT MOST NEARLY CORRESPONDS TO THE APPEARANCE OF THE ITEM.

Reply Instructions: Enter the group designator and applicable style number from Appendix B , Reference Drawing Groups A, B, C, D, E, F, G or H, or Appendix B, Reference Drawing Groups J, K, L, M, N, P, or Q. (e.g., STYLLC8*)

NOTE FOR MRC BSPB: ENTER A REPLY TO MRC BSPB WHEN THE REPLY TO MRC STYL IS C1.

ALL * (See Note Above)

BSPB	D	END CONFIGURATION

Definition: THE GEOMETRIC CONFIGURATION OF THE END(S) WHEN VIEWED IN CROSS SECTION.

Reply Instructions: Enter the applicable Reply Code from the table below. (e.g., BSPBDAG*)

REPLY CODE	REPLY (AE88)
AG	BOTH ENDS CHAMFERED
AJ	BOTH ENDS ROUNDED
AK	BOTH ENDS SQUARED
AM	ONE END CHAMFERED, ONE END ROUNDED
AQ	ONE END SQUARED, ONE END CHAMFERED
AR	ONE END SQUARED, ONE END ROUNDED

APP Key	MRC	Mode Code	Requirements
ALL			
	MTLC	H	MATERIAL AND LOCATION

Definition: THE ELEMENT, COMPOUND, OR MIXTURE OF WHICH THE ITEM IS FABRICATED, EXCLUDING ANY SURFACE TREATMENT, AND ITS LOCATION.

Reply Instructions: Enter the applicable Reply Codes from Appendix A , Tables 4 and 1. (e.g., MTLCHAADCJ0000*)

When multiple or alternate materials apply to a single location, use AND/OR coding ($$/$). Enter multiple replies in Appendix A, Table 1, Reply Code sequence. (e.g., MTLCHAADCJ0000$$HAADGS0000*; MTLCHAADCJ0000$HAADGS0000*)

When two or more locations apply, give a separate reply for each location using AND/OR coding. Sequence the AND/OR coding replies in Appendix A, Table 4 sequence. (e.g., MTLCBSEBR0000 MTLCHCAPBR0000$$HCAPGS0000*; MTLCHSNKBN0141$$HCAPGS0000*)*

ALL *			
	STLC	H	SURFACE TREATMENT AND LOCATION

Definition: THE PLATING, DIP AND/OR COATING THAT CANNOT BE WIPED OFF. PLATING AND/OR COATING IS ANY CHEMICAL AND/OR METALLIC ADDITIVE, ELECTROCHEMICAL, OR MILD MECHANICAL PROCESS WHICH PROTECTS THE SURFACE OF THE ITEM, AND ITS LOCATION.

Reply Instructions: Enter the applicable Reply Codes from Appendix A , Tables 4 and 2. (e.g., STLCHAADNFG000*)

When multiple or alternate surface treatments apply to a single location, use AND/OR coding ($$/$). Enter the replies in Appendix A, Table 2, Reply Code sequence. (e.g., STLCHAADCNW000$$HAADNFG000*; STLCHAADCNW000$HAADNFG000*)

When two or more locations apply, give a separate reply for each location using AND coding. Sequence the AND coding replies in Appendix A, Table 4, sequence. (e.g., STLCBSECD0000 STLCHCAPCD0000$$HCAPCNW000*)*

ALL *			
	AAPC	D	IDENTIFICATION CODE COLOR

APP Key	MRC	Mode Code	Requirements

Definition: THE APPLICATION OF COLOR OR A SERIES OF COLORS FOR THE EXPRESSED PURPOSE OF IDENTIFYING THE SPECIFIC FUNCTIONAL DESIGN AND/OR THE SYSTEM APPLICATION OF AN ITEM.

Reply Instructions: Enter the applicable Reply Code from Appendix A , Table 6. (e.g., AAPCDRE0000*)

For multiple or optional replies, use AND/OR coding ($$/$), entering replies in alphanumeric Reply Code sequence. (e.g., AAPCDRE0000$$DWH0000*; AAPCDRE0000$DWH0000*)

ALL *

UKBG	J	DIELECTRIC MATERIAL VOLTAGE RATING PER UNIT THICKNESS

Definition: THE MAXIMUM POTENTIAL GRADIENT THAT THE INSULATING MATERIAL CAN WITHSTAND, PER UNIT THICKNESS, WITHOUT RUPTURE.

Reply Instructions: Enter the applicable Reply Code from the table below, followed by the numeric value. (e.g., UKBGJAB40.0*; UKBGJAC22.0*)

REPLY CODE	REPLY (AP24)
AC	KILOVOLTS PER MILLIMETER (megavolts per meter)
AB	VOLTS PER MIL (0.001 inch)

B*, C*, D*, F*, G*, H*, J*, L*, M*, N*, P*

AXHR	J	MOUNTING FACILITY TYPE AND QUANTITY

Definition: INDICATES THE TYPE AND NUMBER OF FACILITIES BY WHICH THE ITEM IS MOUNTED.

Reply Instructions: Enter the applicable Reply Code from the table below, followed by the quantity. (e.g., AXHRJAET4*)

REPLY CODE	REPLY (AM39)
BCW	MACHINE SCREW
AHF	THREADED HOLE
AET	THREADED STUD
ACQ	UNTHREADED HOLE
BDC	WOOD SCREW (lagscrew)

APP Key	MRC	Mode Code	Requirements

B*, D*, F*, G*, H*, J*, L*, M*, N*, P* (See Note Above)

ABGX	A	WOOD SCREW SIZE

Definition: DESIGNATES THE SIZE BY WHICH THE WOOD SCREW IS COMMERCIALLY KNOWN AND/OR IDENTIFIED.

Reply Instructions: Enter the size designator. (e.g., ABGXA10*)

See Appendix C, Table 7, for determining wood screw size designation.

B*, C*, D*, F*, G*, H*, J*, L*, M*, N*, P*

CQBP	H	SCREW THREAD SERIES DESIGNATOR AND LOCATION

Definition: A DESIGNATION DISTINGUISHING ONE GROUP OF SCREW THREAD DIAMETER-PITCH COMBINATIONS FROM ANOTHER BY THE NUMBER OF THREADS PER MEASUREMENT SCALE FOR A SPECIFIC DIAMETER, AND THE THREAD LOCATION.

Reply Instructions: Enter the applicable Reply Codes from Appendix A , Table 4, and the table below. (e.g., CQBPHBSEUN*)

When multiple or alternate screw thread series designations apply to a single location, use AND/OR coding ($$/$), entering the replies in table below Reply Code sequence. (e.g., CQBPHAADNC$HAADNS*)

When two or more locations apply, give a separate reply for each location using AND coding. Sequence the AND coding replies in Appendix A, Table 4, sequence. (e.g., CQBPHBSENF$$HCAPNF)*

When the source document specifies SI (Metric threads) but does not show a series designation, see Appendix C, Table 5. When the source document specifies the size and threads but does not show a series designation, see Appendix C, Table 4.

REPLY CODE	REPLY (AH06)
SM	*ISO M (SI other than coarse)
SS	*ISO S (SI coarse)
UN	UN (8, 12, and 16 pitch)
NC	UNC
NE	UNEF
NF	UNF
NS	UNS

APP Key	MRC	Mode Code	Requirements

NOTE FOR MRCS CRFL, CQTP, CQQR, AND CTTC: IF REPLY CODE UN, NC, NF, NE, OR NS IS ENTERED FOR MRC CQBP, REPLY TO MRCS CRFL AND CQTP. IF REPLY CODE SM OR SS IS ENTERED FOR MRC CQBP, REPLY TO MRCS CRFL, CQQR, AND CTTC.

B*, C*, D*, F*, G*, H*, J*, L*, M*, N*, P* (See Note Above)

CRFL J SCREW THREAD DIAMETER AND LOCATION

Definition THE LENGTH OF A STRAIGHT LINE WHICH PASSES THROUGH THE CENTER OF A COAXIAL CYLINDER WHICH WOULD BOUND THE CREST OF AN EXTERNAL THREAD OR THE ROOT OF AN INTERNAL THREAD AND TERMINATES AT THE CIRCUMFERENCE, AND THE THREAD LOCATION.

Reply Instructions: Enter the applicable Reply Codes from Appendix A , Table 4, and Tables 1 and 2 below, followed by the numeric value. (e.g, CRFLJBSEAA0.250*; CRFLJBSELA25.4*)

When a screw thread diameter range applies to a single location, use AND coding ($$), entering the replies in alpha/numeric Reply Code sequence. (e.g., CRFLJBSEAB0.245$$JBSEAC0.255*)

When two or more locations apply, give a separate reply for each location using AND coding. Sequence the AND coding replies in Appendix A, Table 4, sequence. (e.g., CRFL1AJBSEAA0.250$$JLJCAPAA0.225 CRFLJBSELA0.250$$JLJCAPLA0.225* CRFLJBSEAB0.250$$JLJCAPAC0.225*)*

Table 1

REPLY CODE	REPLY (AA05)
A	INCHES
L	MILLIMETERS

Table 2

REPLY CODE	REPLY (AC20)
A	NOMINAL
B	MINIMUM
C	MAXIMUM

B*, C*, D*, F*, G*, H*, J*, L*, M*, N*, P* (See Note Preceding MRC CRFL)

APP Key	MRC	Mode Code	Requirements
	CQTP	J	SCREW THREAD QUANTITY PER INCH AND LOCATION

Definition: THE NUMBER OF SCREW THREADS ON THE ITEM PER LINEAR INCH, INCLUDING INCOMPLETE THREADS, ON A LINE PARALLEL TO THE THREAD AXIS AND THE THREAD LOCATION.

Reply Instructions: Enter the applicable Reply Code from Appendix A , Table 4, followed by the quantity. (e.g., CQTPJBSE20*)

When two or more locations apply, give a separate reply for each location using AND coding. Sequence the AND coding replies in Appendix A, Table 4, sequence. (e.g., CQTPJBSE20$$JCAP15)*

NOTE FOR MRCS CRPG AND CQJM: IF REPLY CODE UN, NC, NE, NF OR NS IS ENTERED FOR MRC CQBP, REPLY TO MRCS CRPG AND CQJM, AS APPLICABLE.

B*, C*, D*, F*, G*, H*, J*, L*, M*, N*, P* (See Note Above)

	CRPG	J	THREAD CLASS AND LOCATION

Definition: A NUMERIC-ALPHA DESIGNATOR INDICATING THE PITCH DIAMETER TOLERANCE AND AN EXTERNAL OR INTERNAL THREAD AND THE LOCATION.

Reply Instructions: Enter the applicable Reply Code from Appendix A , Table 4, followed by the thread class. (e.g., CRPGJBSE1A*)

When two or more locations apply, give a separate reply for each location using AND coding. Sequence the AND coding replies in Appendix A, Table 4, sequence. (e.g., CRPGJBSE1A$$JCAP1A)*

B*, C*, D*, F*, G*, H*, J*, L*, M*, N*, P* (See Note Preceding MRC CRFL)

	CQQR	B	THREAD PITCH IN MILLIMETERS

Definition: A MEASUREMENT OF DISTANCE BETWEEN CORRESPONDING POINTS ON TWO ADJACENT THREADS MEASURED PARALLEL TO THE THREAD AXIS, EXPRESSED IN MILLIMETERS.

Reply Instructions: Enter the applicable I/SAC from Appendix C , Table 10, the Mode Code, and the numeric value. (e.g., CQQR1CB0.7*)

B*, C*, D*, F*, G*, H*, J*, L*, M*, N*, P* (See Note Preceding MRC CRFL)

APP Key	MRC	Mode Code	Requirements
	CTTC	J	THREAD TOLERANCE CLASS

Definition: A NUMERIC-ALPHA DESIGNATOR INDICATING ESTABLISHED PITCH AND CREST DIAMETER TOLERANCE POSITION AND GRADE.

Reply Instructions: Enter the applicable I/SAC from Appendix C , Table 10, the Mode Code, the applicable Reply Code from the table below, followed by the designator. (e.g., CTTC1EJNTE4H6H*)

When the pitch and crest diameter tolerances are identical (i.e., M6X1-6H6H), enter the designation once. (e.g., CTTC1EJNTE6H*)

REPLY CODE	REPLY (AN73)
EXT	EXTERNAL
NTE	INTERNAL

B*, C*, D*, F*, G*, H*, J*, L*, M*, N*, P* (See Note Preceding MRC CRPG)

CQJM	J	THREAD LENGTH AND LOCATION

Definition: A MEASUREMENT OF THE EXTENT OF THREADS, INCLUDING INCOMPLETE THREADS, ALONG A LINE PARALLEL TO THE LONGITUDINAL THREAD AXIS, AND THE LOCATION.

Reply Instructions: Enter the applicable Reply Codes from Appendix A , Table 4, and from Tables 1 and 2 below, followed by the numeric value. (e.g., CQJMJBSEAA1.750*; CQJMJBSELA25.4*; CQJMJBSEAB1.500$$JBSEAC2.000*)

When two or more locations apply, give a separate reply for each location using AND coding. Sequence the AND coding replies in Appendix A, Table 4, sequence. (e.g., CQJMJBSEAA1.750$$JCAPAA1.500 CQJMJBSELA1.750$$JCAPLA1.500* CQJMJBSEAB1.750$$JCAPAC2.500*)*

Table 1

REPLY CODE	REPLY (AA05)
A	INCHES
L	MILLIMETERS

Table 2

REPLY CODE	REPLY (AC20)
A	NOMINAL
B	MINIMUM
C	MAXIMUM

APP Key	MRC	Mode Code	Requirements
D*, H*			
	CRBM	A	CONDUCTOR MECHANICAL ACCOMMODATION QUANTITY

Definition: THE NUMBER OF MECHANICAL ACCOMMODATIONS PROVIDED TO PHYSICALLY SPACE AND/OR SUPPORT ELECTRICAL CONDUCTORS.

Reply Instructions: Enter the numeric value. Exclude terminations which provide electrical connection. (e.g., CRBMA5*)

D*, H*

AAKV	J	MAXIMUM CONDUCTOR SIZE ACCOMMODATED

Definition: THE MAXIMUM SIZE OF THE CONDUCTOR THE ITEM IS DESIGNED TO ACCOMMODATE.

Reply Instructions: Enter the applicable Reply Code from the table below, followed by the numeric value of the largest wire size accommodated. (e.g., AAKVJA14*)

See Appendix C, Table 2, for assistance in determining wire sizes. Convert BuShips wire to appropriate AWG or MCM wire sizes.

For items which simultaneously accommodate wires of different sizes, use AND coding ($$) and sequence replies in descending wire size sequence (ascending numeric sequence). (e.g., AAKVJA10$$JA14*)

REPLY CODE	REPLY (AA44)
A	AWG (American Wire Gage) for sizes larger than 4/0 AWG, use MCM.
M	MCM (Thousands of circular mils) (convert units of thousands-i.e., 700,000 circular mils is recorded as 700)
N #	SQUARE INCHES
S #	SQUARE MILLIMETERS

B*, F*

ACHF	A	ELECTRICAL TERMINATION QUANTITY

APP Key	MRC	Mode Code	Requirements

Definition: THE NUMBER OF TERMINATIONS WHICH FACILITATE ELECTRICAL CONNECTION, SUCH AS TERMINAL LUG(S), STUD(S), CAP(S), AND THE LIKE. EXCLUDES SPACERS OR SUPPORTS.

Reply Instructions: Enter the numeric value. (e.g., ACHFA3*)

ALL *

MARK G SPECIAL MARKINGS

Definition: MARKINGS INCLUDED ON AN ITEM FOR THE PURPOSE OF OFFERING INSTRUCTIONS OR WARNINGS OR TO INDICATE THE PURPOSE, FUNCTION, OR APPLICATION OF THE ITEM. EXCLUDES MANUFACTURERS PART NUMBERS, SYMBOLS, OR THE LIKE.

Reply Instructions: Enter all special markings in clear text. (e.g., MARKGHIGH VOLTAGE*)

NOTE FOR MRCS CBBL AND FEAT: E MODE REPLIES WILL NOT BE ACCEPTABLE IN REPLY TO MRC CBBL. IF A REPLY IS NOT REFLECTED ON THE TABLE FOR MRC CBBL, ENTER THE FEATURE IN REPLY TO MRC FEAT.

ALL* (See Note Above)

CBBL D FEATURES PROVIDED

Definition: THOSE FEATURES, NOT OTHERWISE SPECIFIED, WHICH MAY BE REQUIRED FOR PROPER FUNCTIONING OF THE ITEM.

Reply Instructions: Enter the applicable Reply Code from the table below. (e.g., CBBLDFNY*)

REPLY CODE	REPLY (AN47)
FNY	ROHS DIRECTIVE COMPLIANCE

ALL* (See Note Preceding MRC CBBL)

FEAT G SPECIAL FEATURES

Definition: THOSE UNUSUAL OR UNIQUE CHARACTERISTICS OR QUALITIES OF AN ITEM NOT COVERED IN THE OTHER REQUIREMENTS AND WHICH ARE DETERMINED TO BE ESSENTIAL FOR IDENTIFICATION.

APP Key	MRC	Mode Code	Requirements
	Reply Instructions: Enter the reply in clear text. Separate multiple replies with a semicolon. (e.g., FEATGADJUSTABLE NOSE CLIP*; FEATGADJUSTABLE NOSE PIECE; DISPOSABLE*)		
ALL*			
	TEST	J	TEST DATA DOCUMENT

Definition: THE SPECIFICATION, STANDARD, DRAWING, OR SIMILAR INSTRUMENT THAT SPECIFIES ENVIRONMENTAL AND PERFORMANCE REQUIREMENTS OR TEST CONDITIONS UNDER WHICH AN ITEM IS TESTED AND ESTABLISHES ACCEPTABLE LIMITS WITHIN WHICH THE ITEM MUST CONFORM IDENTIFIED BY AN ALPHABETIC AND/OR NUMERIC REFERENCE NUMBER. INCLUDES THE COMMERCIAL AND GOVERNMENT ENTITY (CAGE) CODE OF THE ENTITY CONTROLLING THE INSTRUMENT.

Reply Instructions: Enter the applicable Reply Code from the table below, followed by the 5-position CAGE Code, a dash, and the document identification number.

(e.g., TESTJA12345-CWX654321*;

TESTJA1234A-654321$$JB5556A-663654*;

TESTJAA2345-654321$JB55566-663654*)

REPLY CODE	REPLY (AC28)
A	SPECIFICATION (Includes engineering type bulletins, brochures, etc., that reflect specification type data in specification format; excludes commercial catalogs, industry directories, and similar trade publications, reflecting general type data on certain environmental and performance requirements and test conditions that are shown as "typical," "average," "nominal," etc.)
B	STANDARD (Includes industry or association standards, individual manufacturer standards, etc.)
C	DRAWING (This is the basic governing drawing, such as a contractor drawing, original equipment manufacturer drawing, etc.; excludes any specification, standard, or other document that may be referenced in a basic governing drawing)

ALL*

APP Key	MRC	Mode Code	Requirements
	SPCL	G	SPECIAL TEST FEATURES

Definition: TEST CONDITIONS AND RATINGS, OR ENVIRONMENTAL AND PERFORMANCE REQUIREMENTS THAT ARE DIFFERENT, MORE CRITICAL, OR MORE SPECIFIC THAN THOSE SPECIFIED IN A GOVERNING TEST DATA DOCUMENT.

Reply Instructions: Enter the reply in clear text. (e.g., SPCLGSELECTED AND TESTED FOR NAVIGATIONAL SYSTEMS*)

ALL*

	ZZZK	J	SPECIFICATION/STANDARD DATA

Definition: THE DOCUMENT DESIGNATOR OF THE SPECIFICATION OR STANDARD WHICH ESTABLISHED THE ITEM OF SUPPLY.

Reply Instructions: Enter the applicable Reply Code from the table below, followed by the Commercial and Government Entity (CAGE) Code of the entity controlling the document, a dash, and the document designator. The agency that controls the limited coordination document must be preceded and followed by a slash following the designator. The word canceled or superseded must be preceded and followed by a slash for the designator. Professional and industrial association specifications/standards are differentiated from a manufacturer's specification in that the data has been coordinated and published by the professional and industrial association. Include amendments and revisions where applicable.

(e.g., ZZZKJT81337-30642B*;

ZZZKJS81349-MIL-D-180 REV1/CANCELED/*;

ZZZKJP80205-NAS1103*;

ZZZKJS81349-MIL-C-1140C/CE/*;

ZZZKJT81337-30642B$$JP80205-NAS1103*)

REPLY CODE	REPLY (AN62)
S	GOVERNMENT SPECIFICATION
T	GOVERNMENT STANDARD
D	MANUFACTURERS SOURCE CONTROL
R	MANUFACTURERS SPECIFICATION
N	MANUFACTURERS SPECIFICATION CONTROL
M	MANUFACTURERS STANDARD
B	NATIONAL STD/SPEC

APP Key	MRC	Mode Code	Requirements
		A	PROFESSIONAL/INDUSTRIAL ASSOCIATION SPECIFICATION
		P	PROFESSIONAL/INDUSTRIAL ASSOCIATION STANDARD

NOTE FOR MRC ZZZT: IF THE SPECIFICATION/STANDARD CITED IN REPLY TO MRC ZZZK IS NONDEFINITIVE, REPLY TO MRC ZZZT. THIS REPLY IS THE DATA WHICH IS NOT RECORDED IN SEGMENT C.

ALL * (See Note Above)

ZZZT J NONDEFINITIVE SPEC/STD DATA

Definition: THE NUMBER, LETTER, OR SYMBOL THAT INDICATES THE TYPE, STYLE, GRADE, CLASS, AND THE LIKE, OF AN ITEM IN A NONIDENTIFYING SPECIFICATION OR STANDARD.

Reply Instructions: Enter the applicable Reply Code from Appendix A , Table 5, followed by the appropriate number, letter, or symbol. (e.g., ZZZTJTY1*; ZZZTJTY1$$JSTA*; ZZZTJTY1$JSTA*)

ALL*

ZZZW G DEPARTURE FROM CITED DOCUMENT

Definition: THE TECHNICAL DIFFERENTIATING CHARACTERISTIC(S) OF AN ITEM OF SUPPLY WHICH DEPART(S) FROM THE TEXT OF A SPECIFICATION OR A STANDARD IN THAT IT REPRESENTS A SELECTION OF CHARACTERISTICS STATED IN THE SPECIFICATION OR STANDARD AS BEING OPTIONAL, OR A VARIATION FROM ONE OR MORE OF THE STATED CHARACTERISTICS, OR AN ADDITIONAL CHARACTERISTIC NOT STATED IN THE SPECIFICATION OR STANDARD.

Reply Instructions: Enter the reply in clear text. (e.g., ZZZWGAS MODIFIED BY MATERIAL*)

ALL*

ZZZX G DEPARTURE FROM CITED DESIGNATOR

Definition: THE VARIATION WHEN THE ITEM IS IN CONFORMITY WITH A TYPE DESIGNATOR COVERED BY A SPECIFICATION OR STANDARD, EXCEPT IN REGARD TO ONE OR MORE TECHNICAL DIFFERENTIATING CHARACTERISTICS.

APP Key	MRC	Mode Code	Requirements
	Reply Instructions: Enter the reply in clear text. (e.g., ZZZXGAS MODIFIED BY MATERIAL*)		
ALL*			
	ZZZY	G	REFERENCE NUMBER DIFFERENTIATING CHARACTERISTICS
	Definition: A FEATURE OF THE ITEM OF SUPPLY WHICH MUST BE SPECIFICALLY RECORDED WHEN THE REFERENCE NUMBER COVERS A RANGE OF ITEMS.		
	Reply Instructions: Enter the reply in clear text. (e.g., ZZZYGCOLOR CODED LEADS*; ZZZYGAS DIFFERENTIATED BY MATERIAL*)		
ALL*			
	CRTL	A	CRITICALITY CODE JUSTIFICATION
	Definition: THE MASTER REQUIREMENT CODES OF THOSE REQUIREMENTS WHICH ARE TECHNICALLY CRITICAL BY REASON OF TOLERANCE, FIT, PERFORMANCE, OR OTHER CHARACTERISTICS WHICH AFFECT IDENTIFICATION OF THE ITEM.		
	Reply Instructions: Enter the Master Requirement Code for the requirement, the reply to which renders the item as being critical. (e.g., CRTLAMATL*; CRTLAMATL$$ASURF*)		
	Reply to this requirement only if the header record for the item identification for the item being identified has been coded as critical.		
NOTE FOR MRC PRPY: IF DOCUMENT AVAILABILITY CODE B, D, F, OR H, REPLY TO MRC PRPY.			
ALL* (See Note Above)			
	PRPY	A	PROPRIETARY CHARACTERISTICS
	Definition: IDENTIFICATION OF THOSE CHARACTERISTICS INCLUDED IN THE DESCRIPTION FOR WHICH A NON-GOVERNMENT ACTIVITY HAS IDENTIFIED ALL OR SELECTED CHARACTERISTICS OF THE ITEM AS BEING PROPRIETARY AND THEREFORE RESTRICTED FROM RELEASE OUTSIDE THE GOVERNMENT WITHOUT PRIOR PERMISSION OF THE ORIGINATOR OF THE DATA.		

APP Key	MRC	Mode Code	Requirements

Reply Instructions: Enter the MRC codes of the individual characteristics of the description which are marked proprietary on the technical data, using AND coding ($$) for multiple characteristics. If all the MRCs are proprietary, enter the reply PACS. If none of the MRCs is proprietary, enter the reply NPAC. (e.g., PRPYAPACS*; PRPYANPAC*; PRPYAMATL$$ASURF*)

NOTE FOR MRC ENAC: ANSWERING THIS MRC WILL GENERATE AN ENAC CODE IN THE ITEM IDENTIFICATION SEGMENT (A) OF THE NSN.

ALL * (See Note Above)

ENAC D ENVIRONMENTAL ATTRIBUTE CODE

Definition: INDICATES THE TYPE OF PRODUCT THAT MEETS OR EXCEEDS THE GOVERNMENT GUIDELINES FOR ENVIRONMENTALLY PREFERRED CHARACTERISTICS.

Reply Instructions: Enter the applicable Reply Code from the table below. (e.g., ENACDJG*)

REPLY CODE	REPLY (EN02)
JG	ASBESTOS ALTERNATIVE PRODUCTS

NOTE FOR BDPK: IF REPLY CODE JG WAS ENTERED FOR MRC ENAC, REPLY TO MRC BDPK.

ALL*

BDPK J ASBESTOS CONTENT PERCENTAGE

Definition: THE ASBESTOS CONTENT OF THE ITEM, EXPRESSED IN PERCENT.

Reply Instructions: Enter the applicable Reply Code from the table below, followed by the numeric value. (e.g., BDPKJA80.0*; BDPKJB75.0$$JC80.0*)

REPLY CODE	REPLY (AC20)
A	NOMINAL
B	MINIMUM
C	MAXIMUM

ALL*

APP Key	MRC	Mode Code	Requirements
	ELRN	G	EXTRA LONG REFERENCE NUMBER

Definition: A REFERENCE NUMBER EXCEEDING 32 POSITIONS.

Reply Instructions: Enter the entire reference number. Do not include the 5-position Commercial and Government Entity (CAGE) Code unless there is more than one extra long reference number on the NSN, (e.g., ELRNGANN112036BIL060557LEN313605UZ62365*).

If there is more than one extra long reference number on the NSN, include the CAGE or NCAGE and separate each reference by using the "&" character, (e.g., 28480 ANN112036BIL060557LEN313605UZ62365 & S1234 NN112036BIL060557LEN313605UZ62365).

In determining quantity of characters in the reference number, count will be made after modification in accordance with Volume 2, Chapter 9, FLIS Procedures Manual, DoD 4100.39-M.

ALL*

ELCD	D	EXTRA LONG CHARACTERISTIC DESCRIPTION

Definition: A DESCRIPTION THAT EXCEEDS 5000 CHARACTERS.

Reply Instructions: Enter the Reply Code from the table below. (e.g., ELCDDA*)

REPLY CODE	REPLY (AN58)
A	ADDITIONAL DESCRIPTIVE DATA ON MANUAL RECORD

SECTION III

APP Key	MRC	Mode Code	Requirements
B, C, D, F, G, H, J, L, M, N, P			
	TMQY	J	FURNISHED ITEMS AND QUANTITY

APP Key	MRC	Mode Code	Requirements

Definition: THE NAME AND NUMBER OF THOSE PARTS FURNISHED WITH THE ITEM OF SUPPLY THAT HAVE NOT BEEN SPECIFIED ELSEWHERE.

Reply Instructions: Enter the applicable Reply Code from Appendix A , Table 3, followed by the quantity. (e.g., TMQYJABX2*)

When multiple items are furnished, use AND coding ($$), entering replies in alpha numeric sequence. (e.g., TMQYJABR3$$JABW3*)

ALL

ADZC D ENVIRONMENTAL PROTECTION

Definition: THE ENVIRONMENTAL ELEMENTS OR CONDITIONS THAT AN ITEM IS DESIGNED OR PROTECTED TO RESIST OR WITHSTAND SATISFACTORILY.

Reply Instructions: Enter the applicable Reply Code from the table below. (e.g., ADZCDLB*; ADZCDGP$$DAJ*)

REPLY CODE	REPLY (AA65)
LB	ELECTRIC ARCING
GP	FUNGUS RESISTANT
CY	HEAT RESISTANT
MP	MILDEW PROOFED
AJ	MILDEW RESISTANT

ALL

AFJN D FRAGILITY FACTOR

Definition: THE MEASURE OF SENSITIVITY OF THE ITEM TO BE PACKAGED. A FACTOR USED BY PACKAGING ENGINEERS IN DEVISING PROPER CUSHIONING IN A PACKAGE.

Reply Instructions: Enter the applicable Reply Code from the table below. (e.g., AFJNDE*)

REPLY CODE	REPLY (AD40)
D	DELICATE
B	EXTREMELY FRAGILE
E	MODERATELY DELICATE
F	MODERATELY RUGGED
G	RUGGED

APP Key	MRC	Mode Code	Requirements
		C	VERY DELICATE

ALL

PMLC J PRECIOUS MATERIAL AND LOCATION

Definition: AN INDICATION OF THE PRECIOUS MATERIAL AND ITS LOCATION IN THE ITEM.

Reply Instructions: Enter the applicable Reply Code from the table below, followed by the location in clear text. (e.g., PMLCJAGA000TERMINALS*; PMLCJAUA000TERMINALS$$JAGA000INTERNAL SURFACES*)

REPLY CODE	REPLY (MA01)
AUA000	GOLD
IRA000	IRIDIUM
AZA000	OSMIUM
PDA000	PALLADIUM
PTA000	PLATINUM
RHA000	RHODIUM
RTA000	RUTHENIUM
AGA000	SILVER

ALL

PMWT J PRECIOUS MATERIAL AND WEIGHT

Definition: AN INDICATION OF THE PRECIOUS MATERIAL CONTAINED IN THE ITEM, AND THE AMOUNT PER A MEASUREMENT SCALE.

Reply Instructions: Enter the applicable Reply Codes from Tables 1 and 2 below, followed by the numeric value. Enter multiple replies in Table 1 sequence. (e.g., PMWLJPTA000R0.780*; PMWTJAUA000F0.500$$JAGA000R0.780*)

Table 1

REPLY CODE	REPLY (AG14)
AUA000	GOLD
IRA000	IRIDIUM
AZA000	OSMIUM
PDA000	PALLADIUM
PTA000	PLATINUM
RHA000	RHODIUM
RTA000	RUTHENIUM
AGA000	SILVER

APP Key	MRC	Mode Code	Requirements

Table 2

REPLY CODE	REPLY (AG14)
E	GRAINS, TROY
R	GRAMS
F	OUNCES, TROY

ALL

PRMT D PRECIOUS MATERIAL

Definition: IDENTIFICATION OF THE PRECIOUS MATERIAL CONTAINED IN THE ITEM.

Reply Instructions: Enter the applicable Reply Code from the table below. (e.g., PRMTDAGA000*; PRMTDAUA000$$DAGA000*)

REPLY CODE	REPLY (MA01)
AUA000	GOLD
IRA000	IRIDIUM
AZA000	OSMIUM
PDA000	PALLADIUM
PTA000	PLATINUM
RHA000	RHODIUM
RTA000	RUTHENIUM
AGA000	SILVER

ALL

SUPP G SUPPLEMENTARY FEATURES

Definition: CHARACTERISTICS OR QUALITIES OF AN ITEM, NOT COVERED IN ANY OTHER REQUIREMENT, WHICH ARE CONSIDERED ESSENTIAL INFORMATION FOR ONE OR MORE FUNCTIONS EXCLUDING NSN ASSIGNMENT.

Reply Instructions: Enter the reply in clear text. (e.g., SUPPGMAY INCL HOLE IN UPPER SUPPORT FOR MTG DURING SHIPMENT*)

ALL

ZZZP J PURCHASE DESCRIPTION IDENTIFICATION

APP Key	MRC	Mode Code	Requirements

Definition: THE CONTROLLING ACTIVITY AND IDENTIFICATION OF A DOCUMENT USED IN LIEU OF A SPECIFICATION IN THE PROCUREMENT OF AN ITEM OF SUPPLY.

Reply Instructions: Enter the 5-position Commercial and Government Entity (CAGE) Code, followed by a dash and the identifying number of the document.

(e.g., ZZZPJ81337-30624A*)

ALL

AGAV	G	END ITEM IDENTIFICATION

Definition: THE NATIONAL STOCK NUMBER OR THE IDENTIFICATION INFORMATION OF THE END EQUIPMENT FOR WHICH THE ITEM IS A PART.

Reply Instructions: Enter the reply in clear text.

(e.g., AGAVG3930-00-000-0000*;

AGAVGFORKLIFT TRUCK, SMITH CORPORATION, MODEL 12, TYPE A*)

ALL

CXCY	G	PART NAME ASSIGNED BY CONTROLLING AGENCY

Definition: THE NAME ASSIGNED TO THE ITEM BY THE GOVERNMENT AGENCY OR COMMERCIAL ORGANIZATION CONTROLLING THE DESIGN OF THE ITEM.

Reply Instructions: Enter the reply in clear text. (e.g., CXCYGLINE PROCESSOR CONTROL BOARD*)

ALL

HZRD	D	HAZARDOUS SUBSTANCES

Definition: THE SUBSTANCES AND/OR MATERIALS CONTAINED IN THE ITEM THAT HAVE BEEN IDENTIFIED AS HAZARDOUS OR ENVIRONMENTALLY DAMAGING BY THE ENVIRONMENTAL PROTECTION AGENCY OR OTHER AUTHORIZED GOVERNMENT AGENCY.

Reply Instructions: Enter the applicable Reply Code from the table below. (e.g., HZRDDHAZ042*)

APP Key	MRC	Mode Code	Requirements

REPLY CODE	REPLY (HZ00)
HAZ042	ASBESTOS
HAZ008	CADMIUM
HAZ052	ZINC

Reply Tables

Table 1 - MATERIALS 46
Table 2 - SURFACE TREATMENTS 76
Table 3 - FURNISHED ITEMS 77
Table 4 - LOCATIONS 77
Table 5 - NONDEFINITIVE SPEC/STD DATA 78
Table 6 - COLORS 80

Table 1 - MATERIALS

MATERIALS

REPLY CODE	REPLY (AD09)
BS0000	ALUMINA
BSA000	ALUMINA CERAMIC
ALC000	ALUMINUM
AL0000	ALUMINUM ALLOY
AL0254	ALUMINUM ALLOY, QQ-A-225/1, ALLOY 1100
AL0269	ALUMINUM ALLOY, QQ-A-225/3, ALLOY 2011, T3
AL0290	ALUMINUM ALLOY, QQ-A-225/8, ALLOY 6061, T4
AL0142	ALUMINUM ALLOY, QQ-A-250/11
AL0386	ALUMINUM ALLOY, QQ-A-250/11, ALLOY 6061, T4
AL0776	ALUMINUM ALLOY, QQ-A-250/11, T4
AL0889	ALUMINUM ALLOY, QQ-A-250/11, T6
AL0532	ALUMINUM ALLOY, QQ-A-318, H34-CANCELED
AL2023	ALUMINUM, ALLOY 6061, T4, TRW ELECTRONIC COMPONENTS, CINCHMONADNOCK DIV
AAAAAA	ANY ACCEPTABLE
AS0000	ASBESTOS
AS0083	ASBESTOS CLOTH, MIL-C-4117, TYPE 3
AS0084	ASBESTOS, MIL-A-7021
AS0019	ASBESTOS, MIL-A-17472-CANCELED
AS0082	ASBESTOS, MIL-G-7021-CANCELED
AS0007	ASBESTOS, MIL-G-12803, NO. P1162-A
AS0085	ASBESTOS, RM 650, RAYBESTOS-MANHATTAN INC
BC0000	BERYLLIUM COPPER
BC0001	BERYLLIUM COPPER, QQ-C-530
AH0000	BERYLLIUM OXIDE
BG0000	BONDED
BQ0002	BORON NITRIDE, GRADE HBR, UNION CARBIDE CORP
BQ0001	BORON NITRIDE, 52305AJ, WESTINGHOUSE ELECTRIC CORP
BR0000	BRASS

REPLY CODE	REPLY (AD09)
BR0044	BRASS, MIL-B-994, COMP A-CANCELED
BR0046	BRASS, MIL-B-994, COMP A OR C-CANCELED
BR0045	BRASS, MIL-B-994, COMP C-CANCELED
BR0229	BRASS, QQ-B-611, COMP B, 1/2 H-CANCELED
BR0047	BRASS, QQ-B-613
BR0079	BRASS, QQ-B-613, ALLOY 240, 1/2H
BR0013	BRASS, QQ-B-621, CLASS A-CANCELED
BR0048	BRASS, QQ-B-626
BR0155	BRASS, QQ-B-626, ALLOY 360, 1/2H
BR0018	BRASS, QQ-B-626, COMP 22
BR0063	BRASS, QQ-B-637
BR0070	BRASS, QQ-B-637, ALLOY 462
BR0071	BRASS, QQ-B-637, ALLOY 464
BR0072	BRASS, QQ-B-637, ALLOY 482
BR0073	BRASS, QQ-B-637, ALLOY 485
BR0019	BRASS, QQ-B-637, COMP 1
BR0049	BRASS, QQ-N-35, COMP 1, HARD-CANCELED
BR0050	BRASS, QQ-W-321
BN0000	BRONZE
BM0088	BRONZE MANGANESE, QQ-B-726-CANCELED
BM0064	BRONZE MANGANESE, QQ-L-225, COMP 1-CANCELED
BN0141	BRONZE, MIL-B-16541, GRADE A
	BRONZE, MIL-B-16541, GRADE A (use Reply Code BN0141)
BN0032	BRONZE, QQ-B-1005, COMP 4-CANCELED
FA0003	CAMBRIC, VARNISHED, MIL-I-3374, TYPE 1, CLASS 2
FA0002	CAMBRIC, VARNISHED, MIL-I-3374, TYPE 2, CLASS 2
CA0000	CARBON
CSE000	CELLULOSE ACETATE
CJ0000	CERAMIC
CJ0025	CERAMIC, ALSIMAG A196, AMERICAN LAVA CORP
CJ0015	CERAMIC, ALSIMAG GRADE 228, AMERICAN LAVA CORP
CJ0034	CERAMIC, ALSIMAG NO. 475, AMERICAN LAVA CORP
CJ0035	CERAMIC, ALSIMAG NO. 576, AMERICAN LAVA CORP
CJ0026	CERAMIC, ALSIMAG 35, AMERICAN LAVA CORP
CJ0018	CERAMIC, ALSIMAG 196, AMERICAN LAVA CORP
CJ0050	CERAMIC, ALSIMAG 198, AMERICAN LAVA CORP
CJ0039	CERAMIC, DIAMONITE, U.S. QUARRY TILE CO
CJ0028	CERAMIC, EM120, TYPE GM, BENDIX CORP
CJ0017	CERAMIC FIBER, RF800, JOHNS-MANVILLE CORP
CJ0038	CERAMIC, GRADE A LAVA, SUPERIOR STEATITE AND CERAMIC CORP
CJ0052	CERAMIC, GRADE E-17969, AMERICAN LAVA CORP
CJ0051	CERAMIC, GRADE L5, XEROX DATA SYSTEMS SUB OF XEROX CORP
CJ0036	CERAMIC, GRADE MYKROY 1001, MOLECULAR DIELECTRICS INC
CJ0022	CERAMIC, ISOLANTITE MFG CORP
CJ0027	CERAMIC, LAVITE, TYPE S1-5, ARMA CORP
CJ0008	CERAMIC, MIL-I-10, GRADE L422
CJ0004	CERAMIC, MIL-I-10, GRADE L423

REPLY CODE	REPLY (AD09)
CJ0011	CERAMIC, MIL-I-23264, TABLE 4
CJ0020	CERAMIC, NO. FF94, FORMICA CORP
CJ0033	CERAMIC, NO. 9-2660, SCINTILLA DIV, BENDIX CORP
CJ0023	CERAMIC, NO. 4577, AIRCRAFT RADIO CORP
CJ0019	CERAMIC, NO. 4577, GRADE L-4, AIRCRAFT RADIO CORP
CJ0024	CERAMIC, NO. 4577-1, AIRCRAFT RADIO CORP
CJ0030	CERAMIC, PF-105, CORNING GLASS WORKS
CJ0021	CERAMIC, P691432, TYPE G, SPERRY GYROSCOPE
CJ0016	CERAMIC, THERMALOX 995, BRUSH BERYLLIUM CO
CJ0037	CERAMIC, X300-1, GRADE STYRAMIC HT, MONSANTO CHEMICAL CO
CJ0029	CERAMIC, 9-2260, BENDIX CORP
CJ0031	CERAMIC, 67A12825, TYPE ALSIMAG NO. 35, GALVIN MFG CORP
CJ0032	CERAMIC, 1364, GENERAL ELECTRIC CO
CH0000	CHROME
GS0109	CLASS, EPOXY, PDS44165DE, WESTINGHOUSE ELECTRIC CORP
DFAAK0	CLOTH, NYLON
CE0005	COMPOUND, INSULATING, MIL-I-16923, TYPE B
CU0000	COPPER
CG0000	COPPER-GRAPHITE
CQA000	CORK
CQ0000	CORK AND BUNA
CQ0079	CORK AND BUNA, NC-711, ARMSTRONG CORK CO
CQ0153	CORK, BUTYL, YC-900, NATIONAL GASKET AND WASHER MFG CO INC
FAAAF0	FABRIC, PHENOLIC, CANVAS BASE
FR0000	FERRITE
FB0000	FIBER
FB0045	FIBER, AID3, CONDITION A3, GENERAL ELECTRIC CO
FB0050	FIBER, A105, TYPE B1, GENERAL ELECTRIC CO
FBAAQ0	FIBER, COMPOSITION
FB0039	FIBER, COMPOSITION, SYNTHANE XXXP-IRS, GR LTS E4, EASTMAN KODAK CO
FB0051	FIBER, EM-6, GRADE 2, THE BENDIX CORP
FB0046	FIBER, GM238, GR3, ITT KELLOGG
FB0040	FIBER, M-131, DELCO-REMY DIV, GENERAL MOTORS CORP
FB0023	FIBER, MIL-F-1148
FB0049	FIBER, MIL-F-1148, GRADE BH
FB0002	FIBER, MIL-F-1148, GRADE BH, FORM S
FB0003	FIBER, MIL-F-1148, GRADE BH, FORM T
FB0011	FIBER, MIL-F-1148, GRADE CH
FB0014	FIBER, MIL-F-1148, GRADE CH, FORM R
FB0004	FIBER, MIL-F-1148, GRADE CH, FORM S
FB0005	FIBER, MIL-F-1148, GRADE CH, FORM T
FB0042	FIBER, MIL-F-1148, GRADE S
FBS000	FIBER, PHENOL
FB0060	FIBER, PHENOL, DILECTO, GRADE XX, CONTINENTAL-DIAMOND FIBRE CO
FB0059	FIBER, PHENOL, NO. 5135, GRADE A, AUTOMATIC ELECTRIC CO
FB0115	FIBER, PHENOL, 57823, GRADE IG, WESTERN ELECTRIC CO

REPLY CODE	REPLY (AD09)
FB0061	FIBER, PHENOL, 57823, GRADE IS, WESTERN ELECTRIC CO
FBAAR0	FIBER, PHENOLIC
FB0047	FIBER SHEET, 5080, GRADE A, AUTOMATIC ELECTRIC CO
FBK000	FIBER, VULCANIZED
FB0043	FIBER, VULCANIZED, AMS 3564
FB0022	FIBER, VULCANIZED, ASTM D710
FB0062	FIBER, VULCANIZED, ASTM D710, ELECTRICAL GRADE
FB0048	FIBER, VULCANIZED, ASTM D710-54T, COMMERCIAL GRADE
FB0037	FIBER, VULCANIZED, ASTM D710-63, COMMERCIAL GRADE
FB0063	FIBER, VULCANIZED, MIL-F-1148
FB0064	FIBER, VULCANIZED, MIL-F-1148, GRADE BH, FORM T
FB0065	FIBER, VULCANIZED, MIL-F-1148, GRADE CH, FORM R
FB0066	FIBER, VULCANIZED, MIL-F-1148, GRADE CH, FORM S
FB0041	FIBER, VULCANIZED, MIL-F-10336, TRUNK GRADE
FB0044	FIBER, VULCANIZED, TYPE EK-3290, EASTMAN KODAK CO
FD0036	FIBERBOARD, RM039103, LITTLEFUSE INC
FG0000	FIBERGLASS
FG0021	FIBERGLASS, BENDIX AVIATION CORP
FGAQ00	FIBERGLASS CLOTH, NEOPRENE COATED
FGH000	FIBERGLASS CLOTH, SILICONE IMPREGNATED
FGAZ00	FIBERGLASS CLOTH, SILICONE VARNISHED
FGA000	FIBERGLASS, EPOXY
FG0016	FIBERGLASS, EPOXY, MC1-13071, GLENN L. MARTIN
FG0048	FIBERGLASS, EPOXY, 15517-2, OAK ELECTRO/NETICS CORP
FGAT00	FIBERGLASS, LAMINATED, MELAMINE IMPREGNATED
FGAW00	FIBERGLASS, MELAMINE RESIN BONDED
FG0002	FIBERGLASS, MIL-Y-1140, CLASS C
FG0003	FIBERGLASS, MIL-Y-1140, CLASS S
FG0018	FIBERGLASS, NO. D.P.S. 1.44, GRADE 181-114, DOUGLAS AIRCRAFT CO
FG0015	FIBERGLASS, NO. 27, MINNESOTA MINING AND MFG CO
FG0019	FIBERGLASS, PF335, OWENS CORNING
FGAG00	FIBERGLASS, POLYESTER
FG0013	FIBERGLASS, POLYESTER, REINFORCED, GRADE 1402-D, GLASTIC CORP
FGAX00	FIBERGLASS, POLYESTER RESIN
FG0017	FIBERGLASS, P5036-2, GENERAL DYNAMICS
FG0076	FIBERGLASS, REINFORCED NYLON, DART INDUSTRIES INC
FGAS00	FIBERGLASS, SILICONE RESIN IMPREGNATED
FG0023	FIBERGLASS, SILICONE RESIN IMPREGNATED, WESTERN FIBERGLASS SUPPLY LTD
FGAY00	FIBERGLASS, SILICONE RUBBER COATED
FGAR00	FIBERGLASS, SILICONE VARNISHED
FGAP00	FIBERGLASS, SYNTHETIC RUBBER IMPREGNATED
FGC000	FIBERGLASS, TEFLON COATED
FG0024	FIBERGLASS, TEFLON COATED, 9-3240, BENDIX CORP
FG0049	FIBERGLASS, TYPE HONF, VARFLEX A211, VARFLEX CORP
FG0014	FIBERGLASS, TYPE NO. 970-J, CARBORUNDUM CO
FG0020	FIBERGLASS, TYPE PF315, CORNING FIBERGLASS CORP

REPLY CODE	REPLY (AD09)
FGB000	FIBERGLASS, VARNISHED
FG0026	FIBERGLASS, VARNISHED, LS20627-01, LEAR INC
FG0025	FIBERGLASS, 580-5163-00, TYPE 4, COLLINS RADIO CO
FG0050	FIBERGLASS, 7528286P1, GENERAL ELECTRIC CO
FM0000	FILM
GS0000	GLASS
GSH000	GLASS CLOTH
GSAT00	GLASS CLOTH, EPOXY LAMINATED
GS0104	GLASS CLOTH, EPOXY, 96400, RCA
GSAD00	GLASS CLOTH LAMINATE
GS0308	GLASS CLOTH, SILICON RUBBER COATED, 5451, MINNESTOA MINING AND MFG CO, ELECTRICAL PRODUCTS DIV
GS0105	GLASS CLOTH, 17-1-45, BENDIX AVIATION
GS0106	GLASS EPOXY, M44165DE, WESTINGHOUSE ELECTRIC CORP
GSA000	GLASS, EPOXY
GS0112	GLASS, EPOXY, MICAPLY GRADE EG2752, UNCLAD, MICA CORP
GS0110	GLASS, EPOXY, 7225, HONEYWELL INC
GS0113	GLASS, EPOXY, 6009334, IBM
GS0111	GLASS, EPOXY, 6009334, TYPE GEE, IBM
GSAAAD	GLASS FIBER, MELAMINE
GSB000	GLASS FILLED ALKYD
GSC000	GLASS FILLED MELAMINE
GS0114	GLASS, GRADE 5T-116A, DODGE INDUSTRIES INC
GS0116	GLASS, LAMINATE, G10, ELECTRIC MACHINERY MFG CO, UNITRON DIVISION
GS0107	GLASS LAMINATE, M-2436, GENERAL MOTORS CORP, DELCO-REMY DIVISION
GS0115	GLASS, LAMINATE, M-2436, GENERAL MOTORS
GSAAM0	GLASS, LIME
GSAAZ0	GLASS, MELAMINE
GS0086	GLASS, MELAMINE, 820-1490-030, COLLINS RADIO CO
GS0117	GLASS, NA2-4181, TYPE NO. 2, NORTH AMERICAN AVIATION INC
GS0102	GLASS, PYREX, TYPE 67056, CORNING GLASS WORKS
GSAAAC	GLASS, TEFLON COATED
GS0118	GLASS, TEFLON COATED, 12166-1, WARREN WIRE CO
GS0108	GLASS, 1081, DELCO-REMY DIV
GJ0000	GUM
AYB000	INDIA MICA
EE0000	INSULATION, ELECTRICAL
EE0181	INSULATION, ELECTRICAL, A19823E, GENERAL ELECTRIC CO
EE0206	INSULATION, ELECTRICAL, CE27, CATERPILLAR TRACTOR CO
EE0205	INSULATION, ELECTRICAL, CE32, CATERPILLAR TRACTOR CO
EE0036	INSULATION, ELECTRICAL, FED HH-I-538, TYPE PMF
EE0037	INSULATION, ELECTRICAL, FED HH-I-538, TYPE PMH
EE0035	INSULATION, ELECTRICAL, FED HH-I-538, TYPE PMM
EE0034	INSULATION, ELECTRICAL, FED HH-I-538, TYPE PMR
EE0280	INSULATION, ELECTRICAL, GRADE TSF, THE GLASTIC CORP

REPLY CODE	REPLY (AD09)
EE0182	INSULATION, ELECTRICAL, HH-I-538
EE0183	INSULATION, ELECTRICAL, HH-I-538, TYPE PMF, FORM S
EE0281	INSULATION, ELECTRICAL, HH-I-538, TYPE PMH, FORM S
EE0184	INSULATION, ELECTRICAL, HH-I-538, TYPE PMM, FORM T
EE0185	INSULATION, ELECTRICAL, HH-I-538, TYPE PMR, FORM S
EE0282	INSULATION, ELECTRICAL, HS83, TYPE 2, GRADE MC, UNITED AIRCRAFT CORP
EE0178	INSULATION, ELECTRICAL, HS83, TYPE 4, GRADE G10, UNITED AIRCRAFT CORP
EE0175	INSULATION, ELECTRICAL, HS83, TYPE 4, G7, HAMILTON STANDARD CO
EE0164	INSULATION, ELECTRICAL, JAN-I-10
EE0166	INSULATION, ELECTRICAL, JAN-I-10, GRADE L-1A
EE0158	INSULATION, ELECTRICAL, JAN-I-10, GRADE L-2
EE0157	INSULATION, ELECTRICAL, JAN-I-10, GRADE L-2A
EE0165	INSULATION, ELECTRICAL, JAN-I-10, GRADE L-2B
EE0160	INSULATION, ELECTRICAL, JAN-I-10, GRADE L-3
EE0151	INSULATION, ELECTRICAL, JAN-I-10, GRADE L-3A
EE0152	INSULATION, ELECTRICAL, JAN-I-10, GRADE L-3B
EE0163	INSULATION, ELECTRICAL, JAN-I-10, GRADE L-4
EE0155	INSULATION, ELECTRICAL, JAN-I-10, GRADE L-4A
EE0153	INSULATION, ELECTRICAL, JAN-I-10, GRADE L-4B
EE0156	INSULATION, ELECTRICAL, JAN-I-10, GRADE L-5
EE0154	INSULATION, ELECTRICAL, JAN-I-10, GRADE L-5A
EE0159	INSULATION, ELECTRICAL, JAN-I-10, GRADE L-5B
EE0276	INSULATION, ELECTRICAL, JAN-I-10, L-1
EE0168	INSULATION, ELECTRICAL, MIL-I-10
EE0222	INSULATION, ELECTRICAL, MIL-I-10, GRADE L215
EE0223	INSULATION, ELECTRICAL, MIL-I-10, GRADE L216
EE0042	INSULATION, ELECTRICAL, MIL-I-10, GRADE L221
EE0043	INSULATION, ELECTRICAL, MIL-I-10, GRADE L222
EE0044	INSULATION, ELECTRICAL, MIL-I-10, GRADE L223
EE0045	INSULATION, ELECTRICAL, MIL-I-10, GRADE L224
EE0224	INSULATION, ELECTRICAL, MIL-I-10, GRADE L225
EE0225	INSULATION, ELECTRICAL, MIL-I-10, GRADE L226
EE0046	INSULATION, ELECTRICAL, MIL-I-10, GRADE L231
EE0047	INSULATION, ELECTRICAL, MIL-I-10, GRADE L232
EE0048	INSULATION, ELECTRICAL, MIL-I-10, GRADE L233
EE0049	INSULATION, ELECTRICAL, MIL-I-10, GRADE L234
EE0226	INSULATION, ELECTRICAL, MIL-I-10, GRADE L235
EE0227	INSULATION, ELECTRICAL, MIL-I-10, GRADE L236
EE0050	INSULATION, ELECTRICAL, MIL-I-10, GRADE L241
EE0051	INSULATION, ELECTRICAL, MIL-I-10, GRADE L242
EE0052	INSULATION, ELECTRICAL, MIL-I-10, GRADE L243
EE0053	INSULATION, ELECTRICAL, MIL-I-10, GRADE L244
EE0228	INSULATION, ELECTRICAL, MIL-I-10, GRADE L245
EE0229	INSULATION, ELECTRICAL, MIL-I-10, GRADE L246
EE0278	INSULATION, ELECTRICAL, MIL-I-10, GRADE L302

REPLY CODE	REPLY (AD09)
EE0054	INSULATION, ELECTRICAL, MIL-I-10, GRADE L311
EE0055	INSULATION, ELECTRICAL, MIL-I-10, GRADE L312
EE0056	INSULATION, ELECTRICAL, MIL-I-10, GRADE L313
EE0057	INSULATION, ELECTRICAL, MIL-I-10, GRADE L314
EE0230	INSULATION, ELECTRICAL, MIL-I-10, GRADE L315
EE0231	INSULATION, ELECTRICAL, MIL-I-10, GRADE L316
EE0058	INSULATION, ELECTRICAL, MIL-I-10, GRADE L321
EE0059	INSULATION, ELECTRICAL, MIL-I-10, GRADE L322
EE0060	INSULATION, ELECTRICAL, MIL-I-10, GRADE L323
EE0061	INSULATION, ELECTRICAL, MIL-I-10, GRADE L324
EE0232	INSULATION, ELECTRICAL, MIL-I-10, GRADE L325
EE0233	INSULATION, ELECTRICAL, MIL-I-10, GRADE L326
EE0062	INSULATION, ELECTRICAL, MIL-I-10, GRADE L331
EE0063	INSULATION, ELECTRICAL, MIL-I-10, GRADE L332
EE0064	INSULATION, ELECTRICAL, MIL-I-10, GRADE L333
EE0065	INSULATION, ELECTRICAL, MIL-I-10, GRADE L334
EE0234	INSULATION, ELECTRICAL, MIL-I-10, GRADE L335
EE0235	INSULATION, ELECTRICAL, MIL-I-10, GRADE L336
EE0066	INSULATION, ELECTRICAL, MIL-I-10, GRADE L341
EE0067	INSULATION, ELECTRICAL, MIL-I-10, GRADE L342
EE0068	INSULATION, ELECTRICAL, MIL-I-10, GRADE L343
EE0069	INSULATION, ELECTRICAL, MIL-I-10, GRADE L344
EE0236	INSULATION, ELECTRICAL, MIL-I-10, GRADE L345
EE0237	INSULATION, ELECTRICAL, MIL-I-10, GRADE L346
EE0070	INSULATION, ELECTRICAL, MIL-I-10, GRADE L411
EE0071	INSULATION, ELECTRICAL, MIL-I-10, GRADE L412
EE0072	INSULATION, ELECTRICAL, MIL-I-10, GRADE L413
EE0073	INSULATION, ELECTRICAL, MIL-I-10, GRADE L414
EE0238	INSULATION, ELECTRICAL, MIL-I-10, GRADE L415
EE0239	INSULATION, ELECTRICAL, MIL-I-10, GRADE L416
EE0074	INSULATION, ELECTRICAL, MIL-I-10, GRADE L421
	Insulation, Electrical, MIL-I-10, GRADE L422 (use Reply Code CJ0008)
EE0076	INSULATION, ELECTRICAL, MIL-I-10, GRADE L423
EE0077	INSULATION, ELECTRICAL, MIL-I-10, GRADE L424
EE0240	INSULATION, ELECTRICAL, MIL-I-10, GRADE L425
EE0241	INSULATION, ELECTRICAL, MIL-I-10, GRADE L426
EE0078	INSULATION, ELECTRICAL, MIL-I-10, GRADE L431
EE0079	INSULATION, ELECTRICAL, MIL-I-10, GRADE L432
EE0080	INSULATION, ELECTRICAL, MIL-I-10, GRADE L433
EE0081	INSULATION, ELECTRICAL, MIL-I-10, GRADE L434
EE0242	INSULATION, ELECTRICAL, MIL-I-10, GRADE L435
EE0243	INSULATION, ELECTRICAL, MIL-I-10, GRADE L436
EE0082	INSULATION, ELECTRICAL, MIL-I-10, GRADE L441
EE0083	INSULATION, ELECTRICAL, MIL-I-10, GRADE L442
EE0084	INSULATION, ELECTRICAL, MIL-I-10, GRADE L443
EE0085	INSULATION, ELECTRICAL, MIL-I-10, GRADE L444
EE0244	INSULATION, ELECTRICAL, MIL-I-10, GRADE L445

REPLY CODE	REPLY (AD09)
EE0245	INSULATION, ELECTRICAL, MIL-I-10, GRADE L446
EE0086	INSULATION, ELECTRICAL, MIL-I-10, GRADE L511
EE0087	INSULATION, ELECTRICAL, MIL-I-10, GRADE L512
EE0088	INSULATION, ELECTRICAL, MIL-I-10, GRADE L513
EE0089	INSULATION, ELECTRICAL, MIL-I-10, GRADE L514
EE0246	INSULATION, ELECTRICAL, MIL-I-10, GRADE L515
EE0161	INSULATION, ELECTRICAL, MIL-I-10, GRADE L515W
EE0247	INSULATION, ELECTRICAL, MIL-I-10, GRADE L516
EE0090	INSULATION, ELECTRICAL, MIL-I-10, GRADE L521
EE0091	INSULATION, ELECTRICAL, MIL-I-10, GRADE L522
EE0092	INSULATION, ELECTRICAL, MIL-I-10, GRADE L523
EE0162	INSULATION, ELECTRICAL, MIL-I-10, GRADE L523W
EE0093	INSULATION, ELECTRICAL, MIL-I-10, GRADE L524
EE0248	INSULATION, ELECTRICAL, MIL-I-10, GRADE L525
EE0249	INSULATION, ELECTRICAL, MIL-I-10, GRADE L526
EE0094	INSULATION, ELECTRICAL, MIL-I-10, GRADE L531
EE0095	INSULATION, ELECTRICAL, MIL-I-10, GRADE L532
EE0096	INSULATION, ELECTRICAL, MIL-I-10, GRADE L533
EE0097	INSULATION, ELECTRICAL, MIL-I-10, GRADE L534
EE0250	INSULATION, ELECTRICAL, MIL-I-10, GRADE L535
EE0251	INSULATION, ELECTRICAL, MIL-I-10, GRADE L536
EE0098	INSULATION, ELECTRICAL, MIL-I-10, GRADE L541
EE0099	INSULATION, ELECTRICAL, MIL-I-10, GRADE L542
EE0100	INSULATION, ELECTRICAL, MIL-I-10, GRADE L543
EE0101	INSULATION, ELECTRICAL, MIL-I-10, GRADE L544
EE0252	INSULATION, ELECTRICAL, MIL-I-10, GRADE L545
EE0253	INSULATION, ELECTRICAL, MIL-I-10, GRADE L546
EE0102	INSULATION, ELECTRICAL, MIL-I-10, GRADE L611
EE0103	INSULATION, ELECTRICAL, MIL-I-10, GRADE L612
EE0104	INSULATION, ELECTRICAL, MIL-I-10, GRADE L613
EE0105	INSULATION, ELECTRICAL, MIL-I-10, GRADE L614
EE0254	INSULATION, ELECTRICAL, MIL-I-10, GRADE L615
EE0255	INSULATION, ELECTRICAL, MIL-I-10, GRADE L616
EE0106	INSULATION, ELECTRICAL, MIL-I-10, GRADE L621
EE0107	INSULATION, ELECTRICAL, MIL-I-10, GRADE L622
EE0108	INSULATION, ELECTRICAL, MIL-I-10, GRADE L623
EE0109	INSULATION, ELECTRICAL, MIL-I-10, GRADE L624
EE0110	INSULATION, ELECTRICAL, MIL-I-10, GRADE L631
EE0111	INSULATION, ELECTRICAL, MIL-I-10, GRADE L632
EE0112	INSULATION, ELECTRICAL, MIL-I-10, GRADE L633
EE0113	INSULATION, ELECTRICAL, MIL-I-10, GRADE L634
EE0256	INSULATION, ELECTRICAL, MIL-I-10, GRADE L635
EE0257	INSULATION, ELECTRICAL, MIL-I-10, GRADE L636
EE0114	INSULATION, ELECTRICAL, MIL-I-10, GRADE L641
EE0115	INSULATION, ELECTRICAL, MIL-I-10, GRADE L642
EE0116	INSULATION, ELECTRICAL, MIL-I-10, GRADE L643
EE0117	INSULATION, ELECTRICAL, MIL-I-10, GRADE L644

REPLY CODE	REPLY (AD09)
EE0258	INSULATION, ELECTRICAL, MIL-I-10, GRADE L645
EE0259	INSULATION, ELECTRICAL, MIL-I-10, GRADE L656
EE0118	INSULATION, ELECTRICAL, MIL-I-10, GRADE L711
EE0119	INSULATION, ELECTRICAL, MIL-I-10, GRADE L712
EE0120	INSULATION, ELECTRICAL, MIL-I-10, GRADE L713
EE0121	INSULATION, ELECTRICAL, MIL-I-10, GRADE L714
EE0260	INSULATION, ELECTRICAL, MIL-I-10, GRADE L715
EE0261	INSULATION, ELECTRICAL, MIL-I-10, GRADE L716
EE0122	INSULATION, ELECTRICAL, MIL-I-10, GRADE L721
EE0123	INSULATION, ELECTRICAL, MIL-I-10, GRADE L722
EE0124	INSULATION, ELECTRICAL, MIL-I-10, GRADE L723
EE0125	INSULATION, ELECTRICAL, MIL-I-10, GRADE L724
EE0262	INSULATION, ELECTRICAL, MIL-I-10, GRADE L725
EE0277	INSULATION, ELECTRICAL, MIL-I-10, GRADE L725C
EE0263	INSULATION, ELECTRICAL, MIL-I-10, GRADE L726
EE0126	INSULATION, ELECTRICAL, MIL-I-10, GRADE L731
EE0127	INSULATION, ELECTRICAL, MIL-I-10, GRADE L732
EE0128	INSULATION, ELECTRICAL, MIL-I-10, GRADE L733
EE0129	INSULATION, ELECTRICAL, MIL-I-10, GRADE L734
EE0264	INSULATION, ELECTRICAL, MIL-I-10, GRADE L735
EE0265	INSULATION, ELECTRICAL, MIL-I-10, GRADE L736
EE0130	INSULATION, ELECTRICAL, MIL-I-10, GRADE L741
EE0131	INSULATION, ELECTRICAL, MIL-I-10, GRADE L742
EE0132	INSULATION, ELECTRICAL, MIL-I-10, GRADE L743
EE0133	INSULATION, ELECTRICAL, MIL-I-10, GRADE L744
EE0266	INSULATION, ELECTRICAL, MIL-I-10, GRADE L745
EE0267	INSULATION, ELECTRICAL, MIL-I-10, GRADE L746
EE0134	INSULATION, ELECTRICAL, MIL-I-10, GRADE L811
EE0135	INSULATION, ELECTRICAL, MIL-I-10, GRADE L812
EE0137	INSULATION, ELECTRICAL, MIL-I-10, GRADE L814
EE0268	INSULATION, ELECTRICAL, MIL-I-10, GRADE L815
EE0269	INSULATION, ELECTRICAL, MIL-I-10, GRADE L816
EE0138	INSULATION, ELECTRICAL, MIL-I-10, GRADE L821
EE0139	INSULATION, ELECTRICAL, MIL-I-10, GRADE L822
EE0140	INSULATION, ELECTRICAL, MIL-I-10, GRADE L823
EE0141	INSULATION, ELECTRICAL, MIL-I-10, GRADE L824
EE0270	INSULATION, ELECTRICAL, MIL-I-10, GRADE L825
EE0271	INSULATION, ELECTRICAL, MIL-I-10, GRADE L826
EE0142	INSULATION, ELECTRICAL, MIL-I-10, GRADE L831
EE0143	INSULATION, ELECTRICAL, MIL-I-10, GRADE L832
EE0144	INSULATION, ELECTRICAL, MIL-I-10, GRADE L833
EE0145	INSULATION, ELECTRICAL, MIL-I-10, GRADE L834
EE0272	INSULATION, ELECTRICAL, MIL-I-10, GRADE L835
EE0273	INSULATION, ELECTRICAL, MIL-I-10, GRADE L836
EE0146	INSULATION, ELECTRICAL, MIL-I-10, GRADE L841
EE0147	INSULATION, ELECTRICAL, MIL-I-10, GRADE L842
EE0148	INSULATION, ELECTRICAL, MIL-I-10, GRADE L843

REPLY CODE	REPLY (AD09)
EE0149	INSULATION, ELECTRICAL, MIL-I-10, GRADE L844
EE0188	INSULATION, ELECTRICAL, MIL-I-10, GRADE L844TC
EE0274	INSULATION, ELECTRICAL, MIL-I-10, GRADE L845
EE0275	INSULATION, ELECTRICAL, MIL-I-10, GRADE L846
EE0150	INSULATION, ELECTRICAL, MIL-I-631
EE0190	INSULATION, ELECTRICAL, MIL-I-631, GRADE A, FORM S, CLASS 1
EE0218	INSULATION, ELECTRICAL, MIL-I-631, TYPE A
EE0001	INSULATION, ELECTRICAL, MIL-I-631, TYPE A, CLASS 1
EE0002	INSULATION, ELECTRICAL, MIL-I-631, TYPE A, CLASS 2
EE0003	INSULATION, ELECTRICAL, MIL-I-631, TYPE B, CLASS 1
EE0004	INSULATION, ELECTRICAL, MIL-I-631, TYPE B, CLASS 2
EE0217	INSULATION, ELECTRICAL, MIL-I-631, TYPE B, FORM S
EE0219	INSULATION, ELECTRICAL, MIL-I-631, TYPE C
EE0005	INSULATION, ELECTRICAL, MIL-I-631, TYPE C, CLASS 1
EE0006	INSULATION, ELECTRICAL, MIL-I-631, TYPE C, CLASS 2
EE0191	INSULATION, ELECTRICAL, MIL-I-631, TYPE C, FORM S
EE0007	INSULATION, ELECTRICAL, MIL-I-631, TYPE D, CLASS 1
EE0008	INSULATION, ELECTRICAL, MIL-I-631, TYPE D, CLASS 2
EE0009	INSULATION, ELECTRICAL, MIL-I-631, TYPE E, CLASS 1
EE0010	INSULATION, ELECTRICAL, MIL-I-631, TYPE E, CLASS 2
EE0192	INSULATION, ELECTRICAL, MIL-I-631, TYPE F, FORM U, GRADE B, CLASS 1, CATEGORY 1
EE0220	INSULATION, ELECTRICAL, MIL-I-631, TYPE F, FORM U, SUBFORM UA, GRADE C, CLASS 2, CATEGORY 1
EE0011	INSULATION, ELECTRICAL, MIL-I-631, TYPE F, GRADE A, CLASS 1
EE0012	INSULATION, ELECTRICAL, MIL-I-631, TYPE F, GRADE A, CLASS 2
EE0013	INSULATION, ELECTRICAL, MIL-I-631, TYPE F, GRADE B, CLASS 1
EE0014	INSULATION, ELECTRICAL, MIL-I-631, TYPE F, GRADE B, CLASS 2
EE0015	INSULATION, ELECTRICAL, MIL-I-631, TYPE F, GRADE C, CLASS 1
EE0016	INSULATION, ELECTRICAL, MIL-I-631, TYPE F, GRADE C, CLASS 2
EE0198	INSULATION, ELECTRICAL, MIL-I-631, TYPE G
EE0017	INSULATION, ELECTRICAL, MIL-I-631, TYPE G, CLASS 1
EE0018	INSULATION, ELECTRICAL, MIL-I-631, TYPE G, CLASS 2
EE0216	INSULATION, ELECTRICAL, MIL-I-631, TYPE G, FORM F
EE0193	INSULATION, ELECTRICAL, MIL-I-631, TYPE G, FORM F, CLASS 1
EE0194	INSULATION, ELECTRICAL, MIL-I-631, TYPE G, FORM F, GRADE A, CLASS 1
EE0195	INSULATION, ELECTRICAL, MIL-I-631, TYPE G, FORM S
EE0199	INSULATION, ELECTRICAL, MIL-I-631, TYPE G, FORM S, CLASS 1
EE0196	INSULATION, ELECTRICAL, MIL-I-631, TYPE G, FORM S, CLASS 2
EE0197	INSULATION, ELECTRICAL, MIL-I-631, TYPE G, FORM T, SUBFORM TF, CLASS 1
EE0019	INSULATION, ELECTRICAL, MIL-I-695, TYPE F
EE0200	INSULATION, ELECTRICAL, MIL-I-695, TYPE F, FORM R
EE0023	INSULATION, ELECTRICAL, MIL-I-695, TYPE FC
EE0021	INSULATION, ELECTRICAL, MIL-I-695, TYPE FP
EE0201	INSULATION, ELECTRICAL, MIL-I-695, TYPE FP, FORM S
EE0020	INSULATION, ELECTRICAL, MIL-I-695, TYPE R

REPLY CODE	REPLY (AD09)
EE0022	INSULATION, ELECTRICAL, MIL-I-695, TYPE RP
EE0171	INSULATION, ELECTRICAL, MIL-I-2706
EE0024	INSULATION, ELECTRICAL, MIL-I-3393-CANCELED
EE0027	INSULATION, ELECTRICAL, MIL-I-3505, CLASS B, TYPE GMG
EE0025	INSULATION, ELECTRICAL, MIL-I-3505, CLASS B, TYPE MG
EE0026	INSULATION, ELECTRICAL, MIL-I-3505, CLASS B, TYPE PMG
EE0029	INSULATION, ELECTRICAL, MIL-I-3505, CLASS H, TYPE GMG
EE0028	INSULATION, ELECTRICAL, MIL-I-3505, CLASS H, TYPE MG
EE0214	INSULATION, ELECTRICAL, MIL-I-3505, FORM S, CLASS H, TYPE GMG
EE0172	INSULATION, ELECTRICAL, MIL-I-17205, FORM C, GRADE S
EE0030	INSULATION, ELECTRICAL, MIL-I-17205, GRADE O
EE0031	INSULATION, ELECTRICAL, MIL-I-17205, GRADE S
EE0173	INSULATION, ELECTRICAL, MIL-I-18057
EE0032	INSULATION, ELECTRICAL, MIL-I-18746
EE0186	INSULATION, ELECTRICAL, MIL-I-19526-CANCELED
EE0213	INSULATION, ELECTRICAL, MIL-I-19526, TYPE PMF-S-CANCELED
EE0189	INSULATION, ELECTRICAL, MIL-I-19917, TYPE MPF-S
EE0187	INSULATION, ELECTRICAL, MIL-I-21070
EE0033	INSULATION, ELECTRICAL, MIL-I-22129
EE0215	INSULATION, ELECTRICAL, MIL-I-22834, TYPE D100-353
EE0169	INSULATION, ELECTRICAL, MIL-I-23264
EE0170	INSULATION, ELECTRICAL, MIL-I-24204, FORM S
EE0203	INSULATION, ELECTRICAL, NO. 415218-1050, TEXAS INSTRUMENTS INC
EE0176	INSULATION, ELECTRICAL, NO. 415218-1100, TEXAS INSTRUMENTS INC
EE0204	INSULATION, ELECTRICAL, NO. 415218-1140, TEXAS INSTRUMENTS INC
EE0177	INSULATION, ELECTRICAL, NO. 26316216, VAP-AIR DIV OF VAPOR CORP
EE0202	INSULATION, ELECTRICAL, NO. 26316216, VAPOR CORP
EE0283	INSULATION, ELECTRICAL, RX-44, THE PRESTOLITE CO
EE0207	INSULATION, ELECTRICAL, TMS 7505442, TELEDYNE SYSTEMS CORP
EE0286	INSULATION, ELECTRICAL, 415218-1010, TEXAS INSTRUMENTS INC
EE0288	INSULATION, ELECTRICAL, 415218-1030, TEXAS INSTRUMENTS INC
EE0284	INSULATION, ELECTRICAL, 445141-1, THE MAGNAVOX CO
EE0180	INSULATION, ELECTRICAL, 6083418, IBM
EE0279	INSULATION, ELECTRICAL, 7528176P2, GENERAL ELECTRIC CO
EE0285	INSULATION, ELECTRICAL, 9120620009, ELCO CORP
EE0208	INSULATION, GRADE L-3, ISOLANTITE MFG CORP
EE0209	INSULATION, LAMINATED, NO. 1956245, GENERAL MOTORS CORP
EE0210	INSULATION, NO. 00-475-703-030, ALLIS-CHALMERS MFG CO
EEA000	INSULATION, THERMOPLASTIC
FE0020	IRON, MALLEABLE, ASTM A47
GST000	LAMINATED GLASS
LBA000	LAVA, GROUND TALC AND SODIUM SILICATE
LB0001	LAVA, GROUND TALC AND SODIUM SILICATE, TYPE 35, AMERICAN LAVA CORP
LN0000	LINEN
MD0002	MELAMINE, EM88, GRADE 5, BENDIX AVIATION CORP
MD0000	MELAMINE, MOULDED, ASBESTOS FILLED

REPLY CODE	REPLY (AD09)
ME0000	METAL
MEE000	METAL ALLOY
AY0000	MICA
AY0026	MICA, ASTM D351
AY0016	MICA, ASTM D351, CLASS V-1
AY0028	MICA, ASTM D351, CLASS V-2
AY0051	MICA, ASTM D351, CLASS V-3
AY0073	MICA, ASTM D351, CLASS V-4
AY0029	MICA, ASTM D351, CLASS V-5
AY0083	MICA, ASTM D351, CLASS V-6
AY0027	MICA, ASTM D351, CLASS V-7
AY0072	MICA, ASTM D351, FORM 3
AY0081	MICA, ASTM D351, FORM 3, CLASS V-1
AY0046	MICA, ASTM D351, GRADE 5
AY0052	MICA, ASTM D351, GRADE 6
AY0030	MICA, ASTM D748
AY0031	MICA, ASTM D748, CLASS C-1AA
AY0054	MICA, ASTM D748, CLASS C1
AY0050	MICA, ASTM D748, CLASS C1, GRADE 4, FORM 2
AY0049	MICA, ASTM D748, CLASS C3-BB
AY0053	MICA, ASTM D748, FORM 1, CLASS C1
AY0048	MICA, ASTM D748, FORM 1, CLASS C3-BB
AY0055	MICA, ASTM D748, FORM 1, GRADE A/A, CLASS C3-BB
AY0075	MICA, A14A1, TYPE A, GENERAL ELECTRIC CO
AY0033	MICA, A14A1A, GENERAL ELECTRIC CO
AY0043	MICA, A14A1A1, GENERAL ELECTRIC CO
AY0060	MICA, A14A1C, GENERAL ELECTRIC CO
AY0044	MICA, A14A1D, GENERAL ELECTRIC CO
AY0061	MICA, A14A18, GENERAL ELECTRIC CO
AY0032	MICA COVERED FIBRE, RX2997, ELECTRIC AUTO-LITE CO
AY0091	MICA, EGB758-T, TYPE GE, THE MICA CORP
AYG000	MICA GLASS
AYA000	MICA, GLASS-BONDED
AY0020	MICA, GLASS BONDED, COMPOSITION 11555, GENERAL ELECTRIC CO
AY0018	MICA, GLASS BONDED, NO. 400, MYCALEX CORP
AY0019	MICA, GLASS BONDED, TYPE SUPRAMICA, MYCALEX CORP
AY0062	MICA, HH-I-00536
AY0063	MICA, HH-I-00536, CLASS 1, QUALITY V-1, GRADE 5
AY0064	MICA, HH-I-00536, CLASS 2, GRADE 5
AY0085	MICA, HH-I-00536, CLASS 2, GRADE 5, QUALITY V-7
AY0079	MICA, HH-I-00536, QUALITY V-2
AY0082	MICA, HH-I-00536, QUALITY V-3
AY0034	MICA, HH-I-00536, QUALITY V-6
AY0080	MICA, HH-I-00536, QUALITY V-9
AY0012	MICA, HH-I-536
AY0003	MICA, HH-I-536 OR HH-I-538
AY0035	MICA, HH-I-536, TYPE NMBS

REPLY CODE	REPLY (AD09)
AY0015	MICA, HH-I-536, TYPE NMC
AY0066	MICA, HH-I-536, TYPE NMC, GRADE S
AY0065	MICA, HH-I-536, TYPE NMC, GRADE 1
AY0089	MICA, HH-I-536, TYPE NMCL
AY0024	MICA, HH-I-536, TYPE NMC1
AY0023	MICA, HH-I-536, TYPE NMF
AY0037	MICA, HH-I-536, TYPE NMFS
AY0057	MICA, HH-I-536, TYPE NMG
AY0074	MICA, HH-I-536, TYPE NMGS
AY0059	MICA, HH-I-536, TYPE NMH
AY0022	MICA, HH-I-536, TYPE NMS
AY0058	MICA, HH-I-536, TYPE NMS, GRADE 3
AY0017	MICA, HH-I-536, TYPE NMSA
AY0036	MICA, HH-I-536, TYPE NMSA, GRADE 4
AY0021	MICA, HH-I-536, TYPE NMSB
AY0042	MICA, HH-I-536, TYPE NMSS
AY0090	MICA, INDIA 2, NEMA 3, CLASS B, H.A. HOLDEN INC
AY0068	MICA, JAN-I-7, CLASS L-3
AY0056	MICA, M-9099, GENERAL DYNAMICS CORP, ELECTRONICS DIVISION
AY0045	MICA, MIL-M-15176
AY0001	MICA, MIL-M-15176, TYPE 1
AY0002	MICA, MIL-M-15176, TYPE 2
AY0038	MICA, MS 12008, JACK AND HEINTZ INC
AY0039	MICA, MS-14000-B, LEAR SIEGLER INC, AEROSPACE DIV
AY0070	MICA, MS-14000-B, LEAR SIEGLER INC
AYK000	MICA, MUSKOVITE
AYH000	MICA, NATURAL
AYJ000	MICA, NATURAL BLOCK
AY0025	MICA, NO. 3510, MINNESOTA MINING AND MFG CO
AY0076	MICA, NO. 2010097-22, RADIO CORP OF AMERICA
AY0040	MICA PAPER, EM-15, FORM V, BENDIX CORP, NAVIGATION AND CONTROLS DIV
AYL000	MICA, PHLOGOPITE
AY0078	MICA, SUPER 500, MYCALEX CORP OF AMERICA
AY0069	MICA, 15-014017, TYPE B, LEAR SIEGLER INC
AY0047	MICA, 500, MYCALEX CORP
AY0067	MICA, 6550, HONEYWELL INC
AY0077	MICA, 6550, HONEYWELL INC, AEROSPACE MINNEAPOLIS DIV
AY0092	MICA, 250049, THE NATIONAL CASH REGISTER CO
AY0084	MICA, 2010097-27, GRADE V-2, RCA
MC0000	MUSCOVITE
MCA000	MUSCOVITE MICA, GRAPHITIC
MCB000	MUSCOVITE MICA, WET GROUND
PL0098	NYLON, FM10001, LEWIS ENGINEERING CO
PF0000	PAPER
PF0068	PAPER, ARMITE, SPAULDING FIBRE CO, INC
PFAAAP	PAPER, ASBESTOS

REPLY CODE	REPLY (AD09)
PF0087	PAPER, CAT NO. 707YKE IRVINGTON VARNISH AND INSULATOR CO
PFA000	PAPER, FISHPAPER
PF0044	PAPER, FISHPAPER, MIL-I-695, TYPE F
PF0081	PAPER, IMPREGNATED, M-9121, DELCO RADIO DIV OF GENERAL MOTORS CORP
PFAAAR	PAPER, INSULATING
PFK000	PAPER, KRAFT
PFAL00	PAPER, LAMINATED
PF0083	PAPER, LOT NO. 2017, US SLICING MACHINE CO, INC
PF0085	PAPER, NOMEX, CLASS H, BROWNELL INC
PF0088	PAPER, P691129, TYPE KP, SPERRY GYROSCOPE CO
PF0086	PAPER, P691432, TYPE A, SPERRY GYROSCOPE CO
PFAAM0	PAPER, RAG PULP TYPE
PF0082	PAPER, TYPE 9-5584, E I DUPONT DE NEMOURS AND CO INC
PFAAAQ	PAPER, VULCANIZED
PZ0000	PHOSPHOR BRONZE
PZ0018	PHOSPHOR BRONZE, QQ-B-750, COMP A, HARD
PZ0022	PHOSPHOR BRONZE, QQ-B-750, COMP D, HARD
PC0000	PLASTIC
PCB000	PLASTIC, ACETAL
PC2100	PLASTIC, ACETAL COPOLYMER, SPEC 854 8700, RCA CORP, DEFENSE ELECTRONIC PRODUCTS
PC0981	PLASTIC, ACETAL, L-P-392
PC0232	PLASTIC, ACETAL, L-P-392, TYPE 1, CLASS 1
PC0235	PLASTIC, ACETAL, L-P-392, TYPE 2, CLASS 1
PC1197	PLASTIC, ACETAL, L-P-392, TYPE 2, CLASS 2
PCEEA0	PLASTIC, ACETAL RESIN
PC0983	PLASTIC, ACETAL RESIN, DELRIN, E I DUPONT DE NEMOURS AND CO
PC2111	PLASTIC, ACETAL RESIN, 417042-500, TEXAS INSTRUMENTS INC
PCED00	PLASTIC, ACETATE SHEET
PCAAAE	PLASTIC, ACRYLATE
PC0305	PLASTIC, ACRYLIC, MIL-P-21105
PCAAN0	PLASTIC, ACRYLIC RESIN MOULDING POWDER
PC1182	PLASTIC, ACRYLIC RESIN, TYPE LUCITE, E I DUPONT DE NEMOURS AND CO
PC0982	PLASTIC, ACRYLONITRILE, BMC-11 NC, TYPE 20.24-1, LEEDS AND NORTHRUP COMPANY
PCA000	PLASTIC, ACRYLONITRILE-BUTADIENE-STYRENE
PCAAM0	PLASTIC, ALKYD COPOLYMER
PC0587	PLASTIC, ALKYD COPOLYMER, L-P-516, TYPE G-1
PC1158	PLASTIC, ALKYD, ESF-M3D56-A, FORD MOTOR CO
PC0588	PLASTIC, ALLYL, L-P-516, TYPE G-3
PCAAAF	PLASTIC ALLYL
PC0646	PLASTIC, AMS 3611
PC0386	PLASTIC, AMS 3617
PC0203	PLASTIC, AMS 3620
PC0299	PLASTIC, AMS 3648
PC0114	PLASTIC, AMS 3650

REPLY CODE	REPLY (AD09)
PC0115	PLASTIC, AMS 3651
PC0298	PLASTIC, AMS 3656
PCCE00	PLASTIC, ARC RESISTANT
PC1169	PLASTIC, ARC RESISTANT, EM-88, GRADE 4, BENDIX CORP
PC1085	PLASTIC, ARMALON, TYPE 95-510, CADILLAC PLASTIC AND CHEMICAL CO
PC0850	PLASTIC, ASTM D149
PC0204	PLASTIC, ASTM D702, TYPE 2, GRADE 1
PC0205	PLASTIC, ASTM D702, TYPE 2, GRADE 2
PC0206	PLASTIC, ASTM D702, TYPE 2, GRADE 3
PC1226	PLASTIC, ASTM D709, GRADE G-5
PC1272	PLASTIC, ASTM D709, GRADE LE
PC0618	PLASTIC, ASTM D709, GRADE N-1
PC1003	PLASTIC, ASTM D709, GRADE XX
PC1121	PLASTIC, ASTM D709, GRADE XXX
PC0957	PLASTIC, AUTOMATIC ELECTRIC CO, SPEC 5277, GRADE A
PC1333	PLASTIC, A16B1A, GENERAL ELECTRIC CO
PC2115	PLASTIC, A16B5, GENERAL ELECTRIC CO
PC1262	PLASTIC, A16B7B, GENERAL ELECTRIC CO
PC1263	PLASTIC, A19B13A, GENERAL ELECTRIC CO
PC1202	PLASTIC, A19B13A1, GENERAL ELECTRIC CO
PC1349	PLASTIC, A554, GENERAL MOTORS CORP
PC1113	PLASTIC, A579-A, TYPE A, MARTIN CO
PC0750	PLASTIC, BLACK 25, BMG5000, GRADE 9, UNION CARBIDE CORP, PLASTICS DIV
PCAAAR	PLASTIC, CELLULOSE ACETATE
PCG000	PLASTIC, CELLULOSE ACETATE BUTYRATE
PC0984	PLASTIC, CELLULOSE ACETATE BUTYRATE, AMS 3624
PC0375	PLASTIC, CELLULOSE ACETATE BUTYRATE, MIL-I-631, TYPE B, FORM U, CLASS 1
PCAAAD	PLASTIC, CELLULOSE TRIACETATE
PCK000	PLASTIC, CELLULOSIC OR CELLULOSE
PC0318	PLASTIC, CHLOROTRIFLUOROETHYLENE, MIL-P-46036, TYPE 2
PC1111	PLASTIC, COMMERCIAL GRADE FF33, FORMICA CO
PC0622	PLASTIC, COMP FM 10001, E I DUPONT DE NEMOURS AND CO INC
PC1203	PLASTIC, COMPOUND 113, GENERAL ELECTRIC CO
PC1178	PLASTIC, DELRIN ACETAL RESIN, E I DUPONT DE NEMOURS AND CO INC
PC1179	PLASTIC, DELRIN ACETAL RESIN, NO. 417042-250, TEXAS INSTRUMENTS INC
PC2141	PLASTIC, DELRIN 150, COLLINS RADIO CO
PC2112	PLASTIC, DELRIN 150, E I DUPONT DE NEMOURS AND CO INC
PC1087	PLASTIC, DELRIN 500, E I DUPONT DE NEMOURS AND CO INC
PCN000	PLASTIC, DIALLYL PHTHALATE
PCAAAS	PLASTIC, DIALLYL PHTHALATE, GLASS FIBER FILLED
PC0006	PLASTIC, DIALLYL PHTHALATE, MIL-M-14, TYPE MDG
PC0003	PLASTIC, DIALLYL PHTHALATE, MIL-M-14, TYPE SDG-F
PC0004	PLASTIC, DIALLYL PHTHALATE, MIL-M-14, TYPE SDI-5
PC0005	PLASTIC, DIALLYL PHTHALATE, MIL-M-14, TYPE SDI-30
PC0995	PLASTIC, DIALLYL PHTHALATE, MIL-M-18794, TYPE SDG

REPLY CODE	REPLY (AD09)
PC1143	PLASTIC, DIALLYL PHTHALATE, MIL-M-18794, TYPE SDI-5
PC0008	PLASTIC, DIALLYL PHTHALATE, MIL-M-19833, TYPE GDI-30F
PC1173	PLASTIC, EM-46, TYPE T, BENDIX CORP
PC1259	PLASTIC, EM-120, TYPE GM, BENDIX AVIATION CORP
PC0994	PLASTIC, EM7, GRADE 9, BENDIX AVIATION CORP
PC1595	PLASTIC, EM46, TYPE D, THE BENDIX CORP
PC0991	PLASTIC, EN7, GRADE 7, BENDIX AVIATION CORP
PC1189	PLASTIC, EPOXY, G10, 405-6020P005, RAYTHEON CO
PC0996	PLASTIC, EPOXY, MIL-P-18177
PC0010	PLASTIC, EPOXY, MIL-P-18177, TYPE GEB
PC0009	PLASTIC, EPOXY, MIL-P-18177, TYPE GEE
PCAAAT	PLASTIC, EPOXY RESIN
PC2102	PLASTIC, EPOXY RESIN, BONDED GLASS FIBRE SHEET, 1846-001, SMITH INDUSTRIES LTD
PC1190	PLASTIC, EPOXY RESIN, ES-2744, GENERAL MOTORS CORP
PCEEB0	PLASTIC, EPOXY RESIN, GLASS CLOTH BASE
PCZ000	PLASTIC, EPOXY RESIN, GLASS FIBER BASE
PC2116	PLASTIC, EPOXY RESIN, MIL-P-25421
PCAW00	PLASTIC, EPOXY RESIN, PAPER BASE
PC2109	PLASTIC, EPOXY RESIN, 411329-15, TEXAS INSTRUMENTS INC
PC1193	PLASTIC, EPOXY, S405MR43P11, RAYTHEON MFG CO
PCQ000	PLASTIC, ETHYL CELLULOSIC
PC1146	PLASTIC, F-1114, PACKARD BELL ELECTRONICS
PC0277	PLASTIC, FEP-FLUOROCARBON, L-P-523, TYPE 1
PCDDDK	PLASTIC FILM, POLYESTER
PCR000	PLASTIC, FLUORINATED ETHYLENE PROPYLENE
PCAAAJ	PLASTIC, FLUOROCARBON RESIN, TFE
PC1104	PLASTIC, F53914, RADIO ENGINEERING PRODUCTS LTD
PC1137	PLASTIC, G-1842-P1, SOROBAN ENGINEERING INC
PC0949	PLASTIC, GENERAL ELECTRIC CO, A19B22A1
PCAAAA	PLASTIC, GLASS BONDED MICA
PCEZ00	PLASTIC, GLASS FILLED
PCCCD0	PLASTIC, GLASS FILLED PHENOLIC RESIN
PCEEC0	PLASTIC, GLASS REINFORCED
PC1140	PLASTIC, GM 83, GRADE 7, KELLOGG
PC1170	PLASTIC, GRADE BM262, UNION CARBIDE CORP
PC0989	PLASTIC, GRADE C, LEECE-NEVILLE CO
PC1186	PLASTIC, GRADE CENP, ELECTRIC SPECIALTY CO
PC1339	PLASTIC, GRADE RX-41, ELECTRIC AUTO LITE CO
PC1265	PLASTIC, GRADE TS, GLASTIC CORP
PC1130	PLASTIC, GRADE T812, NORTH AMERICAN AVIATION INC
PC0993	PLASTIC, GRADE XP, WEBSTER ELECTRIC CO
PC1175	PLASTIC, GRADE XX, COLLINS RADIO
PC1355	PLASTIC, GRADE XX, TAYLOR FIBER CO
PC1141	PLASTIC, GRADE 2, ITT KELLOGG
PC1200	PLASTIC, GRADE 118, GENERAL ELECTRIC CO
PC1108	PLASTIC, H FILM, E I DUPONT DE NEMOURS AND CO INC

REPLY CODE	REPLY (AD09)
PC1088	PLASTIC, HAYSITE, GRADE EHC, HAYS MFG CO
PC1983	PLASTIC, HH-P-256, GRADE XP-CANCELED
PC1177	PLASTIC, HIGH-K 707L-15, CUSTOM MATERIALS INC
PC1112	PLASTIC, HMS-16-1093, HUGHES AIRCRAFT CO
PC1342	PLASTIC, HS83, TYPE 2, GRADE LE, UNITED AIRCRAFT CORP, HAMILTON STD DIV
PC2119	PLASTIC, HS83, TYPE 4, GRADE 2, UNITED AIRCRAFT CORP, HAMILTON STANDARD DIV
PC1266	PLASTIC, HS85, TYPE 3, HAMILTON STANDARD PROPELLERS
PC1089	PLASTIC, INSULRAD, ELECTRONIZED CHEMICALS CORP
PC0988	PLASTIC, JAN-P-13-CANCELED
PC0967	PLASTIC, JAN-P-13, TYPE LTS-E-2-CANCELED
PC0969	PLASTIC, JAN-P-13, TYPE LTS-E-3-CANCELED
PC0449	PLASTIC, JAN-P-13, TYPE LTS-E-4-CANCELED
PC0450	PLASTIC, JAN-P-13, TYPE LTS-E-5-CANCELED
PC1211	PLASTIC, JAN-P-13, TYPE LTS-EM-2-CANCELED
PC1268	PLASTIC, JAN-P-13, TYPE LTS-H-1-CANCELED
PC0753	PLASTIC, KEL-F-81, MINNESOTA MINING AND MFG CO
PC1209	PLASTIC, KEL-F-300, M W KELLOGG CO
PC1102	PLASTIC, L-C-169, TYPE 1
PC1347	PLASTIC, L-L-31-CANCELED
PC0754	PLASTIC, L-L-31, GRADE CE-CANCELED
PC1194	PLASTIC, L-L-31, TYPE XXXP-CANCELED
PC1077	PLASTIC, L-L-31, TYPE 1-CANCELED
PC1103	PLASTIC, L-L-31, TYPE 1, GRADE X-CANCELED
PC1080	PLASTIC, L-L-31, TYPE 1, GRADE XXP-CANCELED
PC0953	PLASTIC, L-L-31, TYPE 1, GRADE XXX-CANCELED
PC0958	PLASTIC, L-L-31, TYPE 1, GRADE XXXP-CANCELED
PC1008	PLASTIC, L-L-31, TYPE 2, GRADE CE-CANCELED
PC1069	PLASTIC, L-L-31, TYPE 2, GRADE L-CANCELED
PC0898	PLASTIC, L-L-31, TYPE 2, GRADE LE-CANCELED
PC0196	PLASTIC, L-M-500, TYPE 1, CLASS 3-CANCELED
PC0116	PLASTIC, L-M-500, TYPE 2, CLASS 1-CANCELED
PC0117	PLASTIC, L-M-500, TYPE 2, CLASS 2-CANCELED
PC0118	PLASTIC, L-M-500, TYPE 2, CLASS 3-CANCELED
PC1213	PLASTIC, L-M-520, TYPE 4-CANCELED
PC1214	PLASTIC, L-P-349, TYPE 1
PC0171	PLASTIC, L-P-349, TYPE 1, CLASS H2
PC1294	PLASTIC, L-P-377
PC1195	PLASTIC, L-P-377, TYPE 1
PC1215	PLASTIC, L-P-377, TYPE 3
PC0183	PLASTIC, L-P-380, TYPE 1, CLASS 1
PC0184	PLASTIC, L-P-380, TYPE 1, CLASS 2
PC0185	PLASTIC, L-P-380, TYPE 1, CLASS 3
PC0186	PLASTIC, L-P-380, TYPE 2, CLASS 1
PC0187	PLASTIC, L-P-380, TYPE 2, CLASS 2
PC0188	PLASTIC, L-P-380, TYPE 2, CLASS 3

REPLY CODE	REPLY (AD09)
PC1196	PLASTIC, L-P-383
PC2131	PLASTIC, L-P-390, TYPE 1, CLASS H, GRADE 4
PC0360	PLASTIC, L-P-390, TYPE 2, CLASS M, GRADE 4
PC0190	PLASTIC, L-P-391, GRADE 1
PC0494	PLASTIC, L-P-393, FORM 1
PC0495	PLASTIC, L-P-393, FORM 2
PC0119	PLASTIC, L-P-396, TYPE 1, CLASS 1
PC0120	PLASTIC, L-P-396, TYPE 1, CLASS 2
PC0121	PLASTIC, L-P-396, TYPE 2, CLASS 1
PC0122	PLASTIC, L-P-396, TYPE 2, CLASS 2
PC0123	PLASTIC, L-P-396, TYPE 3, CLASS 1
PC0124	PLASTIC, L-P-396, TYPE 3, CLASS 2
PC0125	PLASTIC, L-P-396, TYPE 4, CLASS 1
PC0126	PLASTIC, L-P-396, TYPE 4, CLASS 2
PC1896	PLASTIC, L-P-396, TYPE 5, CLASS 1
PC1897	PLASTIC, L-P-396, TYPE 5, CLASS 2
PC1604	PLASTIC, L-P-403
PC0499	PLASTIC, L-P-403, TYPE 1
PC0500	PLASTIC, L-P-403, TYPE 3, CLASS 1
PC0501	PLASTIC, L-P-403, TYPE 3, CLASS 2
PC2113	PLASTIC, L-P-403, TYPE 5, CLASS 3
PC1348	PLASTIC, L-P-416, TYPE 2
PC1277	PLASTIC, L-P-509
PC0941	PLASTIC, L-P-509, GRADE G-10
PC0133	PLASTIC, L-P-509, TYPE 1, GRADE FR-2
PC0127	PLASTIC, L-P-509, TYPE 1, GRADE XP
PC0128	PLASTIC, L-P-509, TYPE 1, GRADE XX
PC0129	PLASTIC, L-P-509, TYPE 1, GRADE XXP
PC0130	PLASTIC, L-P-509, TYPE 1, GRADE XXX
PC0131	PLASTIC, L-P-509, TYPE 1, GRADE XXXP
PC0132	PLASTIC, L-P-509, TYPE 1, GRADE XXXPC
PC1134	PLASTIC, L-P-509, TYPE 2
PC0136	PLASTIC, L-P-509, TYPE 2, GRADE C
PC0138	PLASTIC, L-P-509, TYPE 2, GRADE L
PC0139	PLASTIC, L-P-509, TYPE 2, GRADE LE
PC0140	PLASTIC, L-P-509, TYPE 2, GRADE MC
PC0141	PLASTIC, L-P-509, TYPE 3, GRADE A
PC0142	PLASTIC, L-P-509, TYPE 4, GRADE G-2
PC0143	PLASTIC, L-P-509, TYPE 4, GRADE G-5
PC0144	PLASTIC, L-P-509, TYPE 4, GRADE G-6
PC0145	PLASTIC, L-P-509, TYPE 4, GRADE G-7
PC0146	PLASTIC, L-P-509, TYPE 4, GRADE G-10
PC1198	PLASTIC, L-P-509, TYPE 4, GRADE G-10, FORM SHEET
PC0147	PLASTIC, L-P-509, TYPE 4, GRADE G-11
PC0148	PLASTIC, L-P-509, TYPE 4, GRADE GPO-1
PC0149	PLASTIC, L-P-509, TYPE 5, GRADE N-1
PC0150	PLASTIC, L-P-509, TYPE 6, GRADE W-1

REPLY CODE	REPLY (AD09)
PC0151	PLASTIC, L-P-509, TYPE 6, GRADE W-2
PC1199	PLASTIC, L-P-516
PC1142	PLASTIC, L-P-516, TYPE E-2
PC1216	PLASTIC, L-P-519
PC0134	PLASTIC, L-P_509, TYPE 1, GRADE FR-3
PC0137	PLASTIC, L-P_509, TYPE 2, GRADE CE
PC1217	PLASTIC, LAMINATE, GLASS BASE, EM-120, TYPE EG ROD, BENDIX CORP
PC1218	PLASTIC, LAMINATE, GLASS BASE, EM-120, TYPE EG SHEET, BENDIX CORP
PCBR00	PLASTIC, LAMINATED
PC1005	PLASTIC, LAMINATED, ASTM D709, GRADE LE
PC1007	PLASTIC, LAMINATED, MIL-P-78, TYPE NDP
PC1004	PLASTIC, LAMINATED, NO. YN25, ELECTRONICS INC
PCEW00	PLASTIC LAMINATED SHEET
PC1122	PLASTIC, LAMINATED, THERMOSETTING, ES-0621, BENDIX AVIATION CORP
PC1150	PLASTIC, LAMINATED, THERMOSETTING, L-P-00513
PC1001	PLASTIC, LAMINATED, THERMOSETTING, L-P-00513, TYPE PBE
PC1002	PLASTIC, LAMINATED, THERMOSETTING, L-P-00513, TYPE PBE-P
PC1081	PLASTIC, LAMINATED, THERMOSETTING, L-P-00513, TYPE PBG
PC0909	PLASTIC, LAMINATED, THERMOSETTING, MIL-P-15047
PCEER0	PLASTIC, LAMINATED THERMOSETTING
PC1006	PLASTIC, LAMINATED, TYPE XXXP-301, TAYLOR FIBRE CO
PC1317	PLASTIC, LOADED EPOXY, TYPE RRRR-E-111, RAYTHEON MFG CO
PCCCS0	PLASTIC, LOW-LOSS
PC0948	PLASTIC, LOW PRESSURE LAMINATED, MIL-P-25421
PCM000	PLASTIC, MELAMINE
PCEE00	PLASTIC, MELAMINE, ASBESTOS FILLED
PC1227	PLASTIC, MELAMINE, A19033, TYPE A1, GENERAL ELECTRIC CO
PC1123	PLASTIC, MELAMINE, EM88, CLASS 5, AMERICAN CYANAMID CO
PC1221	PLASTIC, MELAMINE, GLASS CLOTH, A19B23B1, GENERAL ELECTRIC CO
PC1350	PLASTIC, MELAMINE, GLASS, EM88, GRADE 4, BENDIX CORP
PC1229	PLASTIC, MELAMINE, GLASS, NO. 12700-1, WESTINGHOUSE ELECTRIC CORP
PC1228	PLASTIC, MELAMINE, GRADE A19B33A1, GENERAL ELECTRIC CO
PC1225	PLASTIC, MELAMINE, M-1123, DELCO-REMY DIV
PC0011	PLASTIC, MELAMINE, MIL-M-14, TYPE CMG
PC0012	PLASTIC, MELAMINE, MIL-M-14, TYPE CMI-5
PC0013	PLASTIC, MELAMINE, MIL-M-14, TYPE CMI-10
PC0014	PLASTIC, MELAMINE, MIL-M-14, TYPE MME
PC0015	PLASTIC, MELAMINE, MIL-M-14, TYPE MMI-5
PC0016	PLASTIC, MELAMINE, MIL-M-14, TYPE MMI-30
PC0017	PLASTIC, MELAMINE, MIL-P-79, TYPE GMG
PC1224	PLASTIC, MELAMINE, MIL-P-79, TYPE GMG, FORM R
PC1230	PLASTIC, MELAMINE, MIL-P-79, TYPE GMG, FORM TR
PC0020	PLASTIC, MELAMINE, MIL-P-15037
PC0019	PLASTIC, MELAMINE, MIL-P-15037, TYPE GME
PC0018	PLASTIC, MELAMINE, MIL-P-15037, TYPE GMG
PCDDY0	PLASTIC, MELAMINE, MINERAL FILLED
PCAAV0	PLASTIC, MELAMINE RESIN

REPLY CODE	REPLY (AD09)
PCAAW0	PLASTIC, MELAMINE RESIN, CELLULOSE FABRIC BASE
PCAAX0	PLASTIC, MELAMINE RESIN, GLASS CLOTH
PCAAY0	PLASTIC, MELAMINE RESIN, GLASS FABRIC BASE
PC0394	PLASTIC, MELAMINE RESIN, MIL-P-79, FORM TR, TYPE GMG
PCV000	PLASTIC, METHACRYLATE
PC1220	PLASTIC, MIL-C-25518
PC0907	PLASTIC, MIL-M-14
PC0392	PLASTIC, MIL-M-20693, COMP A, TYPE 1
PC0135	PLASTIC, MIL-M-20693, COMP A, TYPE 3, GRADE B
PC0404	PLASTIC, MIL-M-20693, TYPE 1
PC1082	PLASTIC, MIL-P-14, TYPE CFG
PC0103	PLASTIC, MIL-P-77, TYPE E-2-CANCELED
PC0101	PLASTIC, MIL-P-77, TYPE G-1-CANCELED
PC0102	PLASTIC, MIL-P-77, TYPE G-3-CANCELED
PC0104	PLASTIC, MIL-P-77, TYPE M-1-CANCELED
PC1083	PLASTIC, MIL-P-79, TYPE PBG, FORM R
PC0616	PLASTIC, MIL-P-977, TYPE GSG, CLASS 180
PC0911	PLASTIC, MIL-P-997
PC0105	PLASTIC, MIL-P-997, TYPE GSG
PC0640	PLASTIC, MIL-P-997, TYPE GSG, CLASS H
PC0677	PLASTIC, MIL-P-997B, TYPE CGS
PC1243	PLASTIC, MIL-P-3086
PC1115	PLASTIC, MIL-P-3114, TYPE FBE
PC0559	PLASTIC, MIL-P-3115, TYPE PBE-P-CANCELED
PC1244	PLASTIC, MIL-P-3115, TYPE PBG-CANCELED
PC1399	PLASTIC, MIL-P-3410, TYPE EM-4
PC1360	PLASTIC, MIL-P-3413, TYPE E-2
PC1011	PLASTIC, MIL-P-3413, TYPE EH-2
PC1126	PLASTIC, MIL-P-3803, GRADE 2
PC1144	PLASTIC, MIL-P-3827, TYPE 2
PC0162	PLASTIC, MIL-P-5425
PC0686	PLASTIC, MIL-P-5425, FINISH A
PC1391	PLASTIC, MIL-P-8013-CANCELED
PC0571	PLASTIC, MIL-P-8013, TYPE 1-CANCELED
PC0106	PLASTIC, MIL-P-8013, TYPE 2-CANCELED
PC0107	PLASTIC, MIL-P-8013, TYPE 3-CANCELED
PC1128	PLASTIC, MIL-P-8059, TYPE PBA
PC0952	PLASTIC, MIL-P-10420, CLASS 2-CANCELED
PC1116	PLASTIC, MIL-P-14077-CANCELED
PC1351	PLASTIC, MIL-P-14077, CLASS 1-CANCELED
PC0491	PLASTIC, MIL-P-14078-CANCELED
PC1097	PLASTIC, MIL-P-15035, TYPE PBE
PC0560	PLASTIC, MIL-P-15037, TYPE GMG
PC1114	PLASTIC, MIL-P-15088, TYPE CFI-30
PC0168	PLASTIC, MIL-P-17091-CANCELED
PC0627	PLASTIC, MIL-P-18177
PC0108	PLASTIC, MIL-P-19468

REPLY CODE	REPLY (AD09)
PC0109	PLASTIC, MIL-P-19833, TYPE GDI-30
PC0110	PLASTIC, MIL-P-19833, TYPE GDI-30F
PC0154	PLASTIC, MIL-P-20693, TYPE 3
PC0516	PLASTIC, MIL-P-22241, TYPE 1, GRADE B
PC0687	PLASTIC, MIL-P-22241, TYPE 2
PC0111	PLASTIC, MIL-P-22296, TYPE 1
PC0112	PLASTIC, MIL-P-22296, TYPE 2
PC0519	PLASTIC, MIL-P-22296, TYPE 2, CLASS G
PC0113	PLASTIC, MIL-P-22324, TYPE PEE
PC0523	PLASTIC, MIL-P-22748, CLASS A, GRADE 2
PC0525	PLASTIC, MIL-P-22748, CLASS A, GRADE 4
PC1303	PLASTIC, MIL-P-24074
PC1152	PLASTIC, MIL-P-24074, TYPE 1
PC1818	PLASTIC, MIL-P-25421
PC0678	PLASTIC, MIL-P-25518
PC1242	PLASTIC, MIL-P-25518, TYPE 3
PC1125	PLASTIC, MIL-P-25770, TYPE 2, CLASS 2
PC1000	PLASTIC, MOLDING, L-P-403, TYPE 1
PC1129	PLASTIC, MYLAR FILM, TYPE A, E I DUPONT DE NEMOURS AND CO INC
PCEEE0	PLASTIC, MYLAR-POLYESTER
PC1356	PLASTIC, MYLAR POLYESTER FILM, A16B17, GENERAL GRADE, GENERAL ELECTRIC CO
PC1109	PLASTIC, MYLAR POLYESTER FILM, TYPE A, E I DUPONT DE NEMOURS AND CO INC
PC1345	PLASTIC, NATURAL DELRIN, 254-0998-00, E I DUPONT DE NEMOURS AND CO INC
PC1830	PLASTIC, NEMA G-10
PC1234	PLASTIC, NO. A19B22, GRADE A1, GENERAL ELECTRIC CO
PC1201	PLASTIC, NO. A50A41, GENERAL ELECTRIC CO
PC1260	PLASTIC, NO. M-115, DELCO PRODUCTS DIV, GENERAL MOTORS CORP
PC1330	PLASTIC, NO. NC-E, SYNTHANE CORP
PC1313	PLASTIC, NO. PS693-2, RADIO CORP OF AMERICA
PC1185	PLASTIC, NO. RX-944, ELECTRIC AUTO LITE CO
PC1233	PLASTIC, NO. S 405 MR 10, P003, RAYTHEON MFR CO
PC1269	PLASTIC, NO. X-2770-1, KOLLSMAN INSTRUMENT CORP
PC1318	PLASTIC, NO. ZS405-1001, TYPE P1, RAYTHEON MFG CO
PC1320	PLASTIC, NO. ZS405-1004, TYPE P1, RAYTHEON MFG CO
PC1232	PLASTIC, NO. 1-6000, AERO PRODUCTS, DIV OF GENERAL MOTORS CORP
PC1231	PLASTIC, NO. 1-60000, AERO PRODUCTS, DIV OF GENERAL MOTORS CORP
PC1165	PLASTIC, NO. 1-60010, AERO PRODUCTS, DIV OF GENERAL MOTORS CORP
PC1164	PLASTIC, NO. 1-60022, AERO PRODUCTS, DIV OF GENERAL MOTORS CORP
PC1098	PLASTIC, NO. 3, CLASS B, APPLETON ELECTRIC CO
PC1100	PLASTIC, NO. 10T-128A, DODGE FIBERS CORP
PC1139	PLASTIC, NO. 113 P-13 TY LTS M-4, GENERAL ELECTRIC CO
PC1180	PLASTIC, NO. 301, DOW CORNING
PC1135	PLASTIC, NO. 1040, MAKALOT CHEMICAL CO
PC1254	PLASTIC, NO. 6343, MINNEAPOLIS-HONEYWELL INC

REPLY CODE	REPLY (AD09)
PC1118	PLASTIC, NO. 6367, MINNEAPOLIS-HONEYWELL INC
PC0977	PLASTIC, NO. 31714, SANDERS ASSOCIATES, INC
PC2105	PLASTIC, NOMEX, EM352, THE BENDIX CORP
PC1138	PLASTIC, NOMEX, TYPE 410, E I DUPONT DE NEMOURS AND CO INC
PC1340	PLASTIC, NYLATRON, GS, POLYMER CORP
PC1159	PLASTIC, NYLATRON, POLYMER CORP
PCEEF0	PLASTIC, NYLON
PC1015	PLASTIC, NYLON, FM10001, E I DUPONT DE NEMOURS AND CO INC
PC2118	PLASTIC, NYLON, FM10001, ITT
PC1131	PLASTIC, NYLON, FM10001, POLYMER CORP
PC1358	PLASTIC, NYLON, GRADE M-1590, DELCO-REMY, DIV OF GENERAL MOTORS CORP
PC2103	PLASTIC, NYLON, GRADE YN-25, FORMICA CO
PC0905	PLASTIC, NYLON, MIL-N-18352
PC1132	PLASTIC, NYLON, NO. 138-3, EUGENE DIETZGEN CO
PC1255	PLASTIC, NYLON, NOMEX, CLASS H, E I DUPONT DE NEMOURS AND CO INC
PC1256	PLASTIC, NYLON, NOMEX, E I DUPONT DE NEMOURS AND CO INC
PCAAAC	PLASTIC, NYLON RESIN
PC1257	PLASTIC, NYLON RESIN, E I DUPONT DE NEMOURS AND CO INC
PC1273	PLASTIC, NYLON, TYPE FM10001, E I DUPONT DE NEMOURS AND CO INC
PC2134	PLASTIC, NYLON, 415194-1038, TEXAS INSTRUMENTS INC
PCEY00	PLASTIC, PAPER BASE
PC1344	PLASTIC, PDS44663AV, WESTINGHOUSE ELECTRIC CORP
PCAAL0	PLASTIC, PHENOL-FORMALDEHYDE
PC1275	PLASTIC, PHENOL-FORMALDEHYDE, BM-1132, ALLIS CHALMERS MFG CO
PCAAAK	PLASTIC, PHENOL-FORMALDEHYDE, CANVAS REINFORCEMENT
PCAAAM	PLASTIC, PHENOL-FORMALDEHYDE, LINEN REINFORCEMENT
PC2120	PLASTIC, PHENOL-FORMALDEHYDE, NATURAL, PAPER BASE, GRADE XX,2-9815, COOK ELECTRIC CO
PCEA00	PLASTIC, PHENOL-FORMALDEHYDE, PAPER BASE
PCAAAQ	PLASTIC, PHENOL-FORMALDEHYDE, PAPER REINFORCEMENT
PC1287	PLASTIC, PHENOL-FORMALDEHYDE, PF-9, CLASS TS, PLASTIC MATERIAL MFG
PC2121	PLASTIC, PHENOL-FORMALDEHYDE, 1835-297, LORAIN PRODUCTS CO
PCW000	PLASTIC, PHENOLIC
PC1072	PLASTIC, PHENOLIC, ASTM D709
PC1099	PLASTIC, PHENOLIC, ASTM D709, TYPE 1
PC2104	PLASTIC, PHENOLIC, ASTM D709, TYPE 2, GRADE LX
PC1073	PLASTIC, PHENOLIC, BMG 5000/BM120, INDUSTRIAL ELECTRICAL WORKS
PC1276	PLASTIC, PHENOLIC FIBRE, N90102, NORTHERN ELECTRIC CO, LTD
PC1286	PLASTIC, PHENOLIC, GRADE AA, TAYLOR FIBRE CO
PC0685	PLASTIC, PHENOLIC, GRADE LE, SEASTROM MFG CO INC
PC2123	PLASTIC, PHENOLIC, GRADE XP, CLEVEPAK CORP
PC1191	PLASTIC, PHENOLIC, HH-P-256-CANCELED
PC1205	PLASTIC, PHENOLIC, HH-P-256, GRADE XX-CANCELED
PC1206	PLASTIC, PHENOLIC, HH-P-256, TYPE 1, GRADE XX-CANCELED
PC1075	PLASTIC, PHENOLIC, HH-P-256, TYPE 2, GRADE CE-CANCELED

REPLY CODE	REPLY (AD09)
PC1076	PLASTIC, PHENOLIC, HH-P-256, TYPE 2, GRADE L-CANCELED
PC1192	PLASTIC, PHENOLIC, HH-P-256, TYPE 2, GRADE LE-CANCELED
PC1084	PLASTIC, PHENOLIC, HH-P-256, TYPE 4-CANCELED
PC1171	PLASTIC, PHENOLIC, HH-P-256, TYPE 4, GRADE A-CANCELED
PC0645	PLASTIC, PHENOLIC, HH-P-2567, TYPE 2, GRADE LE-CANCELED
PC0985	PLASTIC, PHENOLIC, L-L-31, TYPE 1, GRADE XX-CANCELED
PC0987	PLASTIC, PHENOLIC, L-P-310, TYPE 2
PC0052	PLASTIC, PHENOLIC, L-P-509, GRADE XXP
PC0447	PLASTIC, PHENOLIC, L-P-513
PC1110	PLASTIC, PHENOLIC, L-P-513, TYPE PBE
PC1133	PLASTIC, PHENOLIC, L-P-513, TYPE PBE-P
PC0098	PLASTIC, PHENOLIC, L-P-513, TYPE PBG
PCAAZ0	PLASTIC, PHENOLIC LAMINATE
PCAAAV	PLASTIC, PHENOLIC LAMINATE, CLOTH BASE
PCDDDW	PLASTIC, PHENOLIC, LINEN BASE
PC1010	PLASTIC, PHENOLIC, LINEN BASE, SYSTRON-DONNER CORP
PC0374	PLASTIC, PHENOLIC, MIL-M-14
PC0021	PLASTIC, PHENOLIC, MIL-M-14, TYPE CFG
PC0022	PLASTIC, PHENOLIC, MIL-M-14, TYPE CFI-5
PC0023	PLASTIC, PHENOLIC, MIL-M-14, TYPE CFI-10
PC0024	PLASTIC, PHENOLIC, MIL-M-14, TYPE CFI-20
PC0025	PLASTIC, PHENOLIC, MIL-M-14, TYPE CFI-40
PC0031	PLASTIC, PHENOLIC, MIL-M-14, TYPE GPI-100
PC0026	PLASTIC, PHENOLIC, MIL-M-14, TYPE MFE
PC0027	PLASTIC, PHENOLIC, MIL-M-14, TYPE MFG
PC0028	PLASTIC, PHENOLIC, MIL-M-14, TYPE MFH
PC0029	PLASTIC, PHENOLIC, MIL-M-14, TYPE MFI-10
PC0030	PLASTIC, PHENOLIC, MIL-M-14, TYPE MFI-20
PC1250	PLASTIC, PHENOLIC, MIL-P-79, FORM TM
PC1252	PLASTIC, PHENOLIC, MIL-P-79, TYPE GMG, FORM TR
PC1249	PLASTIC, PHENOLIC, MIL-P-79, TYPE PBE, FORM TR
PC0999	PLASTIC, PHENOLIC, MIL-P-79
PC0032	PLASTIC, PHENOLIC, MIL-P-79, TYPE FBE
PC1284	PLASTIC, PHENOLIC, MIL-P-79, TYPE FBE, FORM R
PC1352	PLASTIC, PHENOLIC, MIL-P-79, TYPE FBE, FORM TM
PC1136	PLASTIC, PHENOLIC, MIL-P-79, TYPE FBE, FORM TR
PC0033	PLASTIC, PHENOLIC, MIL-P-79, TYPE FBG
PC0549	PLASTIC, PHENOLIC, MIL-P-79, TYPE FBM
PC0550	PLASTIC, PHENOLIC, MIL-P-79, TYPE GMG
PC1043	PLASTIC, PHENOLIC, MIL-P-79, TYPE GMG, FORM R
PC0035	PLASTIC, PHENOLIC, MIL-P-79, TYPE PBE
PC0978	PLASTIC, PHENOLIC, MIL-P-79, TYPE PBE, FORM R
PC0036	PLASTIC, PHENOLIC, MIL-P-79, TYPE PBG
PC2124	PLASTIC, PHENOLIC, MIL-P-79, TYPE PBG, FORM TR
PC0037	PLASTIC, PHENOLIC, MIL-P-79, TYPE PBM
PC1283	PLASTIC, PHENOLIC, MIL-P-3115-CANCELED
PC0038	PLASTIC, PHENOLIC, MIL-P-3115, TYPE PBE-CANCELED

REPLY CODE	REPLY (AD09)
PC0039	PLASTIC, PHENOLIC, MIL-P-3115, TYPE PBE-P-CANCELED
PC0040	PLASTIC, PHENOLIC, MIL-P-3115, TYPE PBG-CANCELED
PC0749	PLASTIC, PHENOLIC, MIL-P-10420
PC0490	PLASTIC, PHENOLIC, MIL-P-15035
PC0041	PLASTIC, PHENOLIC, MIL-P-15035, TYPE FBE
PC0042	PLASTIC, PHENOLIC, MIL-P-15035, TYPE FBG
PC0043	PLASTIC, PHENOLIC, MIL-P-15035, TYPE FBI
PC0044	PLASTIC, PHENOLIC, MIL-P-15035, TYPE FBM
PC0045	PLASTIC, PHENOLIC, MIL-P-15047, TYPE NPG
PC0555	PLASTIC, PHENOLIC, MIL-P-25515, TYPE 2, CLASS 2
PC1282	PLASTIC, PHENOLIC, MIL-P-43037
PC1278	PLASTIC, PHENOLIC, M43301BV, WESTINGHOUSE ELECTRIC CORP
PC0986	PLASTIC, PHENOLIC, NEMA, GRADE XX
PC0979	PLASTIC, PHENOLIC, NEMA, GRADE XXXP
PC1074	PLASTIC, PHENOLIC, NO. A-288, AERO PRODUCTS, DIV OF GENERAL MOTORS CORP
PC1070	PLASTIC, PHENOLIC, NO. 9-334, SCINTILLA DIV, BENDIX AVIATION CORP
PCAX00	PLASTIC, PHENOLIC RESIN
PCAY00	PLASTIC, PHENOLIC RESIN, ASBESTOS PAPER BASE
PCAZ00	PLASTIC, PHENOLIC RESIN, COTTON FABRIC BASE
PCAAA0	PLASTIC, PHENOLIC RESIN, FIBERGLASS BASE
PC1280	PLASTIC, PHENOLIC RESIN, GRADE X, IMPERIAL ELECTRIC CO
PC0270	PLASTIC, PHENOLIC RESIN, L-P-513, TYPE PBE
PC0271	PLASTIC, PHENOLIC RESIN, L-P-513, TYPE PBE-P
PC0398	PLASTIC, PHENOLIC RESIN, MIL-P-79, FORM TM, TYPE PBG
PC0403	PLASTIC, PHENOLIC RESIN, MIL-P-79, FORM TR, TYPE FBM
PC0397	PLASTIC, PHENOLIC RESIN, MIL-P-79, FORM TR, TYPE PBG
PC0399	PLASTIC, PHENOLIC RESIN, MIL-P-79, FORM TR, TYPE PBM
PC1279	PLASTIC, PHENOLIC RESIN, MIL-P-43037-CANCELED
PCAAB0	PLASTIC, PHENOLIC RESIN, NYLON FABRIC BASE
PCAAC0	PLASTIC, PHENOLIC RESIN, PAPER BASE
PC1281	PLASTIC, PHENOLIC RESIN, PAPER BASE, GRADE XX, DIEHL MFG CORP
PC2122	PLASTIC, PHENOLIC RESIN, PDS44301UE, WESTINGHOUSE ELECTRIC CORP
PCAAD0	PLASTIC, PHENOLIC RESIN, WOOD VENEER BASE
PC1161	PLASTIC, PLEXIGLAS, ROHM AND HAAS CO
PCAE00	PLASTIC, POLYAMIDE
PC2135	PLASTIC, POLYAMIDE, A16B18B1, GENERAL ELECTRIC CO
PC0735	PLASTIC, POLYAMIDE, E I DUPONT, DE NEMOURS AND CO, INC
PCEEG0	PLASTIC, POLYAMIDE FILM
PC2125	PLASTIC, POLYAMIDE FILM, EE6379,AIRESEARCH MFG CO
PC0242	PLASTIC, POLYAMIDE, L-P-395, TYPE 1
PC1045	PLASTIC, POLYAMIDE, L-P-410
PC0768	PLASTIC, POLYAMIDE, L-P-410, COMP 6
PC0769	PLASTIC, POLYAMIDE, L-P-410, COMP 6/6
PC0770	PLASTIC, POLYAMIDE, L-P-410, COMP 6/10
PC2114	PLASTIC, POLYAMIDE, L-P-410, TYPE 1
PC0322	PLASTIC, POLYAMIDE, MIL-M-19098

REPLY CODE	REPLY (AD09)
PC0652	PLASTIC, POLYAMIDE, MIL-M-20693
PC0057	PLASTIC, POLYAMIDE, MIL-M-20693, COMP A, TYPE 1
PC0058	PLASTIC, POLYAMIDE, MIL-M-20693, COMP A, TYPE 2
PC0060	PLASTIC, POLYAMIDE, MIL-M-20693, COMP A, TYPE 3, GRADE E
PC1235	PLASTIC, POLYAMIDE, MIL-M-20693, TYPE 1
PC1047	PLASTIC, POLYAMIDE, MIL-M-20693, TYPE 3, GRADE E
PC0908	PLASTIC, POLYAMIDE, MIL-P-17091-CANCELED
PC0064	PLASTIC, POLYAMIDE, MIL-P-17091, TYPE 1-CANCELED
PC0065	PLASTIC, POLYAMIDE, MIL-P-17091, TYPE 2-CANCELED
PC2126	PLASTIC, POLYAMIDE, MIL-P-20693, COMP A, TYPE 3, GRADE E
PC1237	PLASTIC, POLYAMIDE, MIL-P-20693, TYPE 2
PC1048	PLASTIC, POLYAMIDE, MIL-P-20693, TYPE 3
PC1236	PLASTIC, POLYAMIDE, MIL-P-20693, TYPE 3, GRADE E
PC0347	PLASTIC, POLYAMIDE, MIL-P-20963
PC1291	PLASTIC, POLYAMIDE, MIL-P-46060-CANCELED
PC0408	PLASTIC, POLYAMIDE, POLYHEXAMETHYLENE ADIPAMIDE, L-P-410
PC0605	PLASTIC, POLYAMIDE, POLYHEXAMETHYLENE ADIPAMIDE, (NYLON 6/6) L-P-410
PC0409	PLASTIC, POLYAMIDE, POLYHEXAMETHYLENE, SEBACAMIDE, L-P-410
PC0606	PLASTIC, POLYAMIDE, POLYHEXAMETHYLENE, SEBACAMIDE, (NYLON 6/10) L-P-410
PC1357	PLASTIC, POLYAMIDE, TYPE H, E I DUPONT DE NEMOURS AND CO INC
PCAA00	PLASTIC, POLYCARBONATE
PC0960	PLASTIC, POLYCARBONATE, L-P-393
PC0236	PLASTIC, POLYCARBONATE, L-P-393, TYPE 1
PC2136	PLASTIC, POLYCARBONATE RESIN, A16B28A, GENERAL ELECTRIC CO
PC0427	PLASTIC, POLYCARBONATE RESIN, 144-112, THE BENDIX CORP
PCAAAB	PLASTIC, POLYCHLOROFLUOROETHYLENE
PCCA00	PLASTIC, POLYCHLOROTRIFLUOROETHYLENE
PC1292	PLASTIC, POLYCHLOROTRIFLUOROETHYLENE, L-P-385
PC0226	PLASTIC, POLYCHLOROTRIFLUOROETHYLENE, L-P-385, GRADE 3
PC1293	PLASTIC, POLYCHLOROTRIFLUOROETHYLENE, MIL-P-46036, TYPE 2
PCAB00	PLASTIC, POLYESTER
PC2137	PLASTIC, POLYESTER FILM, 417968-1, TEXAS INSTRUMENTS INC
PC0066	PLASTIC, POLYESTER, MIL-M-14, TYPE MAG
PC0067	PLASTIC, POLYESTER, MIL-M-14, TYPE MAI-30
PC0068	PLASTIC, POLYESTER, MIL-M-14, TYPE MAI-60
PCAAE0	PLASTIC, POLYESTER RESIN
PCAAF0	PLASTIC, POLYESTER RESIN, GLASS FIBER BASE
PCCR00	PLASTIC, POLYETHYLENE
PC1092	PLASTIC, POLYETHYLENE, E I DUPONT DE NEMOURS AND CO INC
PC1296	PLASTIC, POLYETHYLENE, MIL-D-3054-CANCELED
PC0070	PLASTIC, POLYETHYLENE, MIL-I-631, TYPE A, CLASS 2
PC2127	PLASTIC, POLYETHYLENE, MYLAR A, HAZELTINE CORP
PC1297	PLASTIC, POLYETHYLENE, PDS44783AA, WESTINGHOUSE ELECTRIC CORP
PCAC00	PLASTIC, POLYETHYLENE TEREPHTHALATE
PC0320	PLASTIC, POLYETHYLENE TEREPHTHALATE, MIL-P-55010

REPLY CODE	REPLY (AD09)
PC1295	PLASTIC, POLYETHYLENE, TYPE A, ANDREW GILCHRIST CO
PC1091	PLASTIC, POLYETHYLENE, TYPE A, E I DUPONT DE NEMOURS AND CO INC
PC2138	PLASTIC, POLYETHYLENE, 8825-4, WESTINGHOUSE ELECTRIC CORP
PC1298	PLASTIC, POLYETHYLENE, 9948-1, WESTINGHOUSE ELECTRIC CORP
PCAD00	PLASTIC, POLYHYDROXY
PC1289	PLASTIC, POLYIMIDE, MIL-P-46112
PC1290	PLASTIC, POLYIMIDE, MIL-P-46112, TYPE 1
PCBY00	PLASTIC, POLYPHENYLENE OXIDE
PCAAG0	PLASTIC, POLYPROLENE
PC1359	PLASTIC, POLYPROPYLENE MOLDING COMPOUND, 2010971-2, RADIO CORP OF AMERICA
PCAF00	PLASTIC, POLYPROPYLENE
PCFFH0	PLASTIC, POLYPROPYLENE TEREPHTHALATE
PCAG00	PLASTIC, POLYSTYRENE
PC1299	PLASTIC, POLYSTYRENE, ESMP-13, GENERAL RADIO CO
PC1300	PLASTIC, POLYSTYRENE, GRADE XMS-10023, RADIO CORP OF AMERICA
PC2101	PLASTIC, POLYSTYRENE, SPEC 820-1562-010, COLLINS RADIO CO
PC1301	PLASTIC, POLYSTYRENE, 417187-1019, TEXAS INSTRUMENTS INC
PCCD00	PLASTIC, POLYSULFONE
PCAH00	PLASTIC, POLYTETRAFLUOROETHYLENE
PC1029	PLASTIC, POLYTETRAFLUOROETHYLENE, AMS 3651
PC1167	PLASTIC, POLYTETRAFLUOROETHYLENE, AMS 3651, FORM ROD
PC1168	PLASTIC, POLYTETRAFLUOROETHYLENE, AMS 3651, FORM SHEETS
PC0689	PLASTIC, POLYTETRAFLUOROETHYLENE, AMS 3652
PC0445	PLASTIC, POLYTETRAFLUOROETHYLENE, AMS 3654
PC0456	PLASTIC, POLYTETRAFLUOROETHYLENE, AMS 3655
PCEEH0	PLASTIC, POLYTETRAFLUOROETHYLENE, GLASS FILLED
PC0438	PLASTIC, POLYTETRAFLUOROETHYLENE, MIL-I-22241, TYPE 1, GRADE B
PC0439	PLASTIC, POLYTETRAFLUOROETHYLENE, MIL-I-22241, TYPE 1, GRADE C
PC0440	PLASTIC, POLYTETRAFLUOROETHYLENE, MIL-I-22241, TYPE 2, GRADE A
PC0441	PLASTIC, POLYTETRAFLUOROETHYLENE, MIL-I-22241, TYPE 2, GRADE B
PC0617	PLASTIC, POLYTETRAFLUOROETHYLENE, MIL-M-14077-CANCELED
PC0073	PLASTIC, POLYTETRAFLUOROETHYLENE, MIL-M-14077, CLASS 1-CANCELED
PC0075	PLASTIC, POLYTETRAFLUOROETHYLENE, MIL-M-14077, CLASS 3-CANCELED
PC0076	PLASTIC, POLYTETRAFLUOROETHYLENE, MIL-P-19161, TYPE GTE
PC0915	PLASTIC, POLYTETRAFLUOROETHYLENE, MIL-P-19468
PC0077	PLASTIC, POLYTETRAFLUOROETHYLENE, MIL-P-19468, GROUP A
PC0078	PLASTIC, POLYTETRAFLUOROETHYLENE, MIL-P-19468, GROUP B
PC0079	PLASTIC, POLYTETRAFLUOROETHYLENE, MIL-P-19468, GROUP C
PC1238	PLASTIC, POLYTETRAFLUOROETHYLENE, MIL-P-22241
PC1309	PLASTIC, POLYTETRAFLUOROETHYLENE, MIL-P-22241, TYPE 1
PC1308	PLASTIC, POLYTETRAFLUOROETHYLENE, MIL-P-22241, TYPE 1, GRADE A
PC1239	PLASTIC, POLYTETRAFLUOROETHYLENE, MIL-P-22241, TYPE 1, GRADE B
PC1117	PLASTIC, POLYTETRAFLUOROETHYLENE, MIL-P-22241, TYPE 2
PC1240	PLASTIC, POLYTETRAFLUOROETHYLENE, MIL-P-22241, TYPE 2, GRADE A
PC0758	PLASTIC, POLYTETRAFLUOROETHYLENE, MIL-P-22241, TYPE 2, GRADE B
PC1241	PLASTIC, POLYTETRAFLUOROETHYLENE, MIL-P-22241, TYPE 3

REPLY CODE	REPLY (AD09)
PC1124	PLASTIC, POLYTETRAFLUOROETHYLENE, MIL-P-22242-CANCELED
PC0080	PLASTIC, POLYTETRAFLUOROETHYLENE, MIL-P-22242, TYPE 1-CANCELED
PC0081	PLASTIC, POLYTETRAFLUOROETHYLENE, MIL-P-22242, TYPE 2-CANCELED
PC0082	PLASTIC, POLYTETRAFLUOROETHYLENE, MIL-P-22242, TYPE 3-CANCELED
PC1310	PLASTIC, POLYTETRAFLUOROETHYLENE, MIL-P-22296
PC1305	PLASTIC, POLYTETRAFLUOROETHYLENE, NO. 412250-5, TEXAS INSTRUMENTS INC
PC1302	PLASTIC, POLYTETRAFLUOROETHYLENE, NO. 415203-1019, TEXAS INSTRUMENTS INC
PC1306	PLASTIC, POLYTETRAFLUOROETHYLENE, NO. 415203-1025, TEXAS INSTRUMENTS INC
PCAAH0	PLASTIC, POLYTETRAFLUOROETHYLENE RESIN
PC1307	PLASTIC, POLYTETRAFLUOROETHYLENE RESIN, MIL-P-19161, TYPE GTE
PC1288	PLASTIC, POLYTETRAFLUOROETHYLENE, TYPE TP, PLASTIC MATERIALS MFG
PC1337	PLASTIC, POLYTETRAFLUOROETHYLENE, TYPE 100 FEP, E I DUPONT DE NEMOURS AND CO INC
PC1338	PLASTIC, POLYTETRAFLUOROETHYLENE, 6814, HONEYWELL INC
PC1336	PLASTIC, POLYTETRAFLUOROETHYLENE, 8825-4, WESTINGHOUSE ELECTRIC CORP
PC2132	PLASTIC, POLYTETRAFLUOROETHYLENE, 44791KD, WESTINGHOUSE ELECTRIC CO
PC1304	PLASTIC, POLYTETRAFLUOROETHYLENE, 2010784-1, RADIO CORP OF AMERICA
PC2128	PLASTIC, POLYTETRAFLUOROETHYLENE, 2010784-108, RCA
PCFX00	PLASTIC, POLYTRIFLUOROCHLOROETHYLENE
PC1166	PLASTIC, POLYTRIFLUOROCHLOROETHYLENE, AMS 3650
PCAAJ0	PLASTIC, POLYTRIFLUOROETHYLENE
PCAJ00	PLASTIC, POLYURETHANE
PC1311	PLASTIC, POLYURETHANE, AMS 3570
PC1312	PLASTIC, POLYURETHANE, NO. S5502C, ROGERS FORM CO
PCAK00	PLASTIC, POLYVINYL CHLORIDE
PC1154	PLASTIC, P690427, TYPE PLE, SPERRY GYROSCOPE CO
PC1323	PLASTIC, P690953, SPERRY GYROSCOPE CO
PC1147	PLASTIC, P691926, TYPE PFA, SPERRY GYROSCOPE CO
PC0980	PLASTIC, REXOLITE, 1422, REX CORP
PC2106	PLASTIC, REXOLITE 1422, 415411-1031, TEXAS INSTRUMENTS INC
PC2107	PLASTIC, REXOLITE 1422, 415411-1050, TEXAS INSTRUMENTS INC
PC1322	PLASTIC, ROD, GRADE LEB, SCINTILLA MAGNETO DIV
PC0912	PLASTIC SHEET, LAMINATED, COPPER CLAD, MIL-P-13949, TYPE GE
PC1153	PLASTIC SHEET, NO. 621-43, SUN ELECTRIC CORP
PC0916	PLASTIC SHEET, THERMOSETTING, MIL-P-18177, TYPE GEE
PC0095	PLASTIC, SILICONE, MIL-M-14, TYPE MSG
PC0096	PLASTIC, SILICONE, MIL-M-14, TYPE MSI-30
PC0097	PLASTIC, SILICONE, MIL-P-997
PC1354	PLASTIC, STD-3, STYLE 150RPD, MC14, CLASS 5, RAYBESTOS MANHATTAN INC

REPLY CODE	REPLY (AD09)
PC1316	PLASTIC, STD-3, STYLE 150RPD, RAYBESTOS MANHATTAN INC
PC1093	PLASTIC, STYCAST, AS-601, HP-K7, EMERSON AND CUMING
PCAAAP	PLASTIC, STYRAMIC
PCAAAN	PLASTIC, STYRENE COPOLYMER
PC0614	PLASTIC, STYRENE COPOLYMER, L-P-516, TYPE E-2
PC1094	PLASTIC, SYNTHANE BAKELITE, GRADE XP, SYNTHANE CORP
PC2129	PLASTIC, SYNTHANE FR-16, SYNTHANE CORP
PC1155	PLASTIC, SYNTHANE, GRADE G5, SYNTHANE CORP
PC1319	PLASTIC, S405-1011P1, GRADE XXXP, RAYTHEON MFG CO
PC1271	PLASTIC, S405MR7-P6, RAYTHEON CO
PC1253	PLASTIC, S405MR43-P9, RAYTHEON CO
PC2139	PLASTIC, TEFLON, A16B5, GENERAL ELECTRIC CO
PC1331	PLASTIC, TEFLON, A16B24B1-B, GENERAL ELECTRIC CO
PC1162	PLASTIC, TEFLON, A16B24B1, CODE C-FBC, GENERAL ELECTRIC CO
PC0751	PLASTIC, TEFLON, E I DUPONT DE NEMOURS AND CO INC
PC1156	PLASTIC, TEFLON, EM46, TYPE T, BENDIX CORP
PCEEJ0	PLASTIC, TEFLON, GLASS FILLED
PC1332	PLASTIC, TEFLON, HLD 8140000037, HOFFMAN ELECTRONICS CORP
PC2133	PLASTIC, TEFLON, M44791LJ, WESTINGHOUSE ELECTRIC CO
PC1095	PLASTIC, TEFLON-PURCH, E I DUPONT DE NEMOURS AND CO INC
PC2140	PLASTIC, TEFLON, P690053, SPERRY GYROSCOPE CO
PC1261	PLASTIC, TEFLON, TFE, CLASS C, E I DUPONT DE NEMOURS AND CO INC
PC1334	PLASTIC, TEFLON, 025-1000-040, GATES RADIO CO
PC2110	PLASTIC, TEFLON, 405-112, E I DUPONT DE NEMOURS AND CO INC
PC1163	PLASTIC, TEFLON, 44791KE, WESTINGHOUSE ELECTRIC CORP
PCAAAL	PLASTIC, TETRAFLUOROETHYLENE
PCAAAG	PLASTIC, TETRAFLUOROETHYLENE FEP OR TFE WITH ADDITIVES
PCAAAH	PLASTIC, TETRAFLUOROETHYLENE REINFORCED
PC1335	PLASTIC, TETRAFLUOROETHYLENE REINFORCED, FLUOROSINT, TFE, POLYMER CORP
PC1119	PLASTIC, TEXTOLITE, 1841-8, GENERAL ELECTRIC CO
PC0252	PLASTIC, TFE, FLUOROCARBON, L-P-403, TYPE 1
PC1096	PLASTIC, THERMA-FILM, THERMALLOY CO
PC1353	PLASTIC, THERMOSETTING, ASTM D700
PC1285	PLASTIC, THERMOSETTING, ASTM D700, TYPE 2
PC0937	PLASTIC, THERMOSETTING, MIL-P-14, TYPE CFG
PC0938	PLASTIC, THERMOSETTING, MIL-P-14, TYPE MAI-60
PC0929	PLASTIC, THERMOSETTING, MIL-P-14, TYPE MME
PCEEK0	PLASTIC, THERMOSETTING, MOLDED
PC1341	PLASTIC, TRANSLAR, NO. 5, CATALOG NO. DM26644, NORMAN WADE CO, LTD
PC1184	PLASTIC, TYPE A, E I DUPONT DE NEMOURS AND CO INC
PC1181	PLASTIC, TYPE FM1001, E I DUPONT DE NEMOURS AND CO INC
PC1248	PLASTIC, TYPE FM10001, E I DUPONT DE NEMOURS AND CO INC
PC1208	PLASTIC, TYPE FM10001, FEDERAL TELECOMMUNICATION LAB INC
PC1101	PLASTIC, TYPE MYLAR, E I DUPONT DE NEMOURS AND CO INC
PC1090	PLASTIC, TYPE NO. 41594-1025, TEXAS INSTRUMENTS INC

REPLY CODE	REPLY (AD09)
PC0682	PLASTIC, TYPE PGR, 65-060-02, SPERRY FLIGHT SYSTEMS DIVISION OF SPERRY RAND CORP
PC1174	PLASTIC, TYPE TFE, BROOK EQUIPMENT CORP
PC1183	PLASTIC, TYPE TFE, E I DUPONT DE NEMOURS AND CO INC
PC1210	PLASTIC, TYPE 912-8, HEWLETT PACKARD CO
PC1188	PLASTIC, TYPE 2662, EMERSON AND CUMING INC
PCAAAX	PLASTIC, VINYL
PCCN00	PLASTIC, VINYL ACETATE
PCAAK0	PLASTIC, VINYLIDENE CHLORIDE COPOLYMER
PC2108	PLASTIC, 6T-116A, DODGE FIBER CORP
PC1267	PLASTIC, 15-027000, TYPE 1, JACK AND HEINTZ INC
PC1212	PLASTIC, 39-8639-500, JOHNSON SERVICE CO
PC1187	PLASTIC, 48-00012-000, TYPE TFE, ELECTRONIC COMMUNICATIONS INC
PC1324	PLASTIC, 56-045-02, TYPE PFA, SPERRY GYROSCOPE CO
PC1207	PLASTIC, 63-006-72, TYPE LL, SPERRY GYROSCOPE CO
PC1120	PLASTIC, 63-018-17, TYPE PLE, SPERRY GRYOSCOPE CO
PC1327	PLASTIC, 63-020-02, TYPE GAF, SPERRY GYROSCOPE CO
PC1328	PLASTIC, 63-020-24, TYPE GAF, SPERRY GYROSCOPE CO
PC1326	PLASTIC, 63-019017, TYPE GLE, SPERRY GYROSCOPE CO
PC1148	PLASTIC, 65-025-17, TYPE PBA-NATURAL, SPERRY GYROSCOPE CO
PC1329	PLASTIC, 65-045-02, SPERRY GYROSCOPE CO
PC1325	PLASTIC, 65-050-02, TYPE PDB, SPERRY GYROSCOPE CO
PC0974	PLASTIC, 254-0925-00, TEKTRONIX, INC
PC2010	PLASTIC, 405-1025P6, RAYTHEON CO
PC0992	PLASTIC, 621-66, SUN ELECTRIC CORP
PC1176	PLASTIC, 702-0002, CONTINENTAL ELECTRONICS MFG CO
PC1346	PLASTIC, 900A341, CLASS 5, SYMBOL AB, WESTINGHOUSE ELECTRIC CORP
PC0990	PLASTIC, 1185, TYPE XP, POWER EQUIPMENT CO
PC1105	PLASTIC, 1422, GENERAL ELECTRIC CO
PC1086	PLASTIC, 5135, GRADE A, AUTOMATIC ELECTRIC CO
PC1145	PLASTIC, 6820, MINNEAPOLIS-HONEYWELL REGULATOR CO
PC1264	PLASTIC, 11554, GENERAL ELECTRIC CO
PC1204	PLASTIC, 11554, TYPE A19B23C1, GENERAL ELECTRIC CO
PC1157	PLASTIC, 53836CP, WESTINGHOUSE ELECTRIC CORP
PC1274	PLASTIC, 58265, GRADE LE, WESTERN ELECTRIC CO
PC2117	PLASTIC, 960176-2, LITTON SYSTEMS INC
PC1321	PLASTIC, 2010784-1, RADIO CORP OF AMERICA
PC1315	PLASTIC, 2010784-112, RADIO CORP OF AMERICA
PC1314	PLASTIC, 2010784-116, RADIO CORP OF AMERICA
PC2130	PLASTIC, 2577182-4, GENERAL DYNAMICS CORP
PL0000	POLYAMIDE NYLON
PLA000	POLYAMIDE NYLON FIBER, VARNISHED
PLK000	POLYAMIDE NYLON, GLASS FILLED
PL0081	POLYAMIDE NYLON, GLASS FILLED, MARBLOCK 9003, GARLOCK INC
PL0002	POLYAMIDE NYLON, L-P-395, TYPE 1
PL0004	POLYAMIDE NYLON, L-P-410
PL0006	POLYAMIDE NYLON, L-P-410, NYLON 6/6, NATURAL, WITH OR WITHOUT

REPLY CODE	REPLY (AD09)
	FILLERS
PL0005	POLYAMIDE NYLON, MIL-N-18352
BH0000	PORCELAIN
CZ0000	POTASSIUM SILICATE
PG0000	PRESSBOARD
DA0001	RESIN, EPOXY, P/N 95-204680-5555, SYLVANIA ELECTRIC PROD INC
RC0000	RUBBER
RC0263	RUBBER, AMS 3195
RC0020	RUBBER, AMS 3209
RCH000	RUBBER, CHLOROPRENE
RCBC00	RUBBER, EBONITE
RC0032	RUBBER, HH-G-156, CLASS B
RC0733	RUBBER, HS 186-70, UNITED AIRCRAFT CORP, HAMILTON STD DIV
RC0185	RUBBER, MIL-G-1149, TYPE 1, CLASS 2
RC0068	RUBBER, MIL-R-3065
RC0764	RUBBER, MIL-R-3065, CLASS SB, 415BF
RC0647	RUBBER, MIL-R-3065, CLASS SC, 600FF
RC0726	RUBBER, MIL-R-3065, GRADE SC, 810
RC0731	RUBBER, MIL-R-3065, GRADE SC, 810Z
RC0071	RUBBER, MIL-R-7362
RC0725	RUBBER, MIL-S-2788
RC0728	RUBBER, NEOPRENE, PDS45301AJ, WESTINGHOUSE ELECTRIC CORP
RC0729	RUBBER, NEOPRENE, PDS45351AE, WESTINGHOUSE ELECTRIC CORP
RC0732	RUBBER, NO. 76-005-17, TYPE LTA, SPERRY GYROSCOPE CO
RC0730	RUBBER, SILASTIC, NO. 161, DOW CORNING CORP
RC0727	RUBBER, SILICONE, MIL-R-5847, CLASS 3, GRADE 25-CANCELED
RC0734	RUBBER, SILICONE, SILASTIC, 250, DOW CORNING CORP
RCBG00	RUBBER, SILICONE, SPONGE
RC0735	RUBBER, SILICONE, SPONGE, COHRLASTIC, R-10470, CONNECTICUT HARD RUBBER CO
RCC000	RUBBER, SYNTHETIC
RC0395	RUBBER, SYNTHETIC, AMS 3228
RC0736	RUBBER, SYNTHETIC, ASTM D735, GRADE SC515BFP
RC0739	RUBBER, SYNTHETIC, MIL-R-3065, GRADE RS509-5ABF
RC0738	RUBBER, SYNTHETIC, MIL-R-3065, GRADE SC512ABEF
RC1003	RUBBER, SYNTHETIC, MIL-R-6855
RC0490	RUBBER, SYNTHETIC, MIL-S-6855-CANCELED
RC0209	RUBBER, SYNTHETIC, ZZ-R-765, CLASS 3, GRADE 60
RC0737	RUBBER, SYNTHETIC, 9-1210, BENDIX CORP
RCBA00	RUBBER, VULCANIZED
RC0724	RUBBER, 1926, GRADE A, AUTOMATIC ELECTRIC CO
SLA000	SILICONE
SLZ000	SILICONE FIBERGLASS
SLT000	SILICONE, FIBERGLASS IMPREGNATED
SLY000	SILICONE FIBERGLASS LAMINATE
SLB000	SILICONE GLASS
SLL000	SILICONE GLASS LAMINATE

REPLY CODE	REPLY (AD09)
SLC000	SILICONE RESIN
SLD000	SILICONE RESIN, GLASS CLOTH
SL0000	SILICONE RUBBER
SL0040	SILICONE RUBBER AMS 3195
SL0049	SILICONE RUBBER, AMS 3315
SL0051	SILICONE RUBBER, AMS 3332
SL0054	SILICONE RUBBER, S406MR10P2, RAYTHEON MFG CO
SL0002	SILICONE RUBBER, ZZ-R-765, CLASS 1A, GRADE 50
SL0004	SILICONE RUBBER, ZZ-R-765, CLASS 1A, GRADE 70
SL0018	SILICONE RUBBER, ZZ-R-765, CLASS 2B, GRADE 60
SL0056	SILICONE RUBBER, 9-2944, SCINTILLA DIV, BENDIX AVIATION CORP
SL0055	SILICONE RUBBER, 17517, GENERAL LABORATORY ASSOCIATES
SD0000	STEATITE
SD0001	STEATITE, JAN-I-8
SD0003	STEATITE, JAN-I-8, TYPE NS5AW4204
SD0002	STEATITE, SYMBOL BN, TYPE NO. 3942, GENERAL CERAMIC CORP
ST0000	STEEL
STAABC	STEEL, ALLOY
ST1052	STEEL, CARBON
ST0596	STEEL, CARBON, FREE MACHINING
ST0634	STEEL, CARBON, QQ-S-624-CANCELED
ST0635	STEEL, CARBON, QQ-S-633-CANCELED
STB000	STEEL, CORROSION RESISTING
SC0125	STEEL, CORROSION RESISTING, MIL-W-7720
SC0078	STEEL, CORROSION RESISTING, QQ-S-763, CLASS 302
SC0079	STEEL, CORROSION RESISTING, QQ-S-763, CLASS 303
SC0081	STEEL, CORROSION RESISTING, QQ-S-763, CLASS 304
ST2033	STEEL, QQ-S-630-CANCELED
STD000	STEEL, STAINLESS
VA0015	VARNISH, MIL-V-1137, TYPE M, GRADE CB
FB0038	VULCANIZED FIBER, ASA-C59.20-1949, COMMERCIAL GRADE
VD0001	VULCANIZED FIBER, MIL-F-1148, GRADE BH
VD0002	VULCANIZED FIBER, MIL-F-1148, GRADE CH
WD0000	WOOD

Table 2 - SURFACE TREATMENTS

SURFACE TREATMENTS

REPLY CODE	REPLY (AD09)
AN0000	ANODIZED
AAAAAA	ANY ACCEPTABLE
BA0000	BLACK OXIDE
BA0001	BLACK OXIDE, MIL-F-495
CD0000	CADMIUM
CDR000	CADMIUM PLATED
CDAL00	CADMIUM PLATED W/CHROMATE

REPLY CODE	REPLY (AD09)
CD0014	CADMIUM, QQ-P-416, TYPE 2, CLASS C
CD0008	CADMIUM, QQ-P-416, TYPE 2, CLASS 2
CNW000	CHROMATE TREATMENT
GB0000	GALVANIZED
GL0000	GLAZED
NF0000	NICKEL
NFG000	NICKEL PLATED
NF0109	NICKEL PLATING, QQ-N-290
PH0000	PHOSPHATE
PH0002	PHOSPHATE, MIL-C-16232-CANCELED
AG0000	SILVER
SJF000	SOLDER COATED
SJC000	SOLDER DIP, HOT
SN0004	TIN PLATE, MIL-T-10727, TYPE 1 OR 2
SNF000	TIN PLATED
SN0002	TIN PLATED, MIL-T-10727, TYPE 1
SN0003	TIN PLATED, MIL-T-10727, TYPE 2
TD0000	TINNED DIPPED, HOT
VA0001	VARNISHED, MIL-V-173
ZN0000	ZINC
ZN0006	ZINC, QQ-Z-325, TYPE 2, CLASS 3

Table 3 - FURNISHED ITEMS

FURNISHED ITEMS

REPLY CODE	REPLY (AB28)
ABR	BOLT
ABS	BRACKET
ACA	FLAT WASHER
ACB	LOCK WASHER
ABW	NUT
ABY	PIN
ABZ	SHIELD
ABT	TERMINAL LUG
ABX	WING NUT

Table 4 - LOCATIONS

LOCATIONS

REPLY CODE	REPLY (AN73)
BSE	BASE
CAP	CAP
CSD	CENTER STUD
ETM	ELECTRICAL TERMINATION
FCB	FIRST COUNTERBORE
GKT	GASKET

REPLY CODE	REPLY (AN73)
MTB	MOUNTING BASE
MTF	MOUNTING FACILITY
AAD	OVERALL
SCB	SECOND COUNTERBORE
SNK	SHANK
SLD	SHIELD

Table 5 - NONDEFINITIVE SPEC/STD DATA

NONDEFINITIVE SPEC/STD DATA

REPLY CODE	REPLY (AD08)
AL	ALLOY
AN	ANNEX
AP	APPENDIX
AC	APPLICABILITY CLASS
AR	ARRANGEMENT
AS	ASSEMBLY
AB	ASSORTMENT
BX	BOX
CY	CAPACITY
CA	CASE
CT	CATEGORY
CL	CLASS
CE	CODE
CR	COLOR
CC	COMBINATION CODE
CN	COMPONENT
CP	COMPOSITION
CM	COMPOUND
CD	CONDITION
CS	CONSTRUCTION
DE	DESIGN
DG	DESIGNATOR
DW	DRAWING NUMBER
EG	EDGE
EN	END
FY	FAMILY
FG	FIGURE
FN	FINISH
FM	FORM
FA	FORMULA
GR	GRADE
GP	GROUP
BA	IMAGE COLOR
NS	INSERT
TM	ITEM
KD	KIND

REPLY CODE	REPLY (AD08)
KT	KIT
LG	LENGTH
LT	LIMIT
MK	MARK
AA	MARKER
ML	MATERIAL
BB	MAXIMUM DENSITY
MH	MESH
ME	METHOD
BC	MINIMUM DENSITY
MD	MODEL
MT	MOUNTING
NR	NUMBER
PT	PART
PN	PATTERN
PC	PHYSICAL CONDITION
PS	PIECE
PL	PLAN
PR	POINT
QA	QUALITY
RN	RANGE
RT	RATING
RF	REFERENCE NUMBER
SC	SCHEDULE
SB	SECTION
SL	SELECTION
SE	SERIES
SV	SERVICE
SX	SET
SA	SHADE
SH	SHAPE
SG	SHEET
SZ	SIZE
PZ	SPECIES
SQ	SPECIFICATION SHEET
SD	SPEED
ST	STYLE
SS	SUBCLASS
SF	SUBFORM
SP	SUBTYPE
SN	SURFACE CONDITION
SY	SYMBOL
SM	SYSTEM
TB	TABLE
TN	TANNAGE
TP	TEMPER
TX	TEXTURE
TK	THICKNESS

REPLY CODE	REPLY (AD08)
TT	TREATMENT
TR	TRIM
TY	TYPE
YN	UNIT
VA	VARIETY
WT	WEIGHT
WD	WIDTH

Table 6 - COLORS

COLORS

REPLY CODE	REPLY (AD06)
AM0000	AMBER
BL0000	BLACK
BU0000	BLUE
BR0000	BROWN
BR0008	BROWN, CHOCOLATE
BR0071	BROWN, GRAY
BR0003	BROWN, LIGHT
MS0013	BUFF
CL0000	CLEAR
GY0000	GRAY
GR0000	GREEN
GR0026	GREEN, GRAY
NA0000	NATURAL
LD0000	OLIVE DRAB
RG0000	ORANGE
RE0000	RED
RE0020	RUBY
SL0000	SILVER
TA0000	TAN
VL0000	VIOLET
WH0000	WHITE
YE0000	YELLOW

Reference Drawing Groups

REFERENCE DRAWING GROUP A Tables 82
REFERENCE DRAWING GROUP A 84
REFERENCE DRAWING GROUP B Tables 85
REFERENCE DRAWING GROUP B 87
REFERENCE DRAWING GROUP C Tables 95
REFERENCE DRAWING GROUP C 98
REFERENCE DRAWING GROUP D Tables 108
REFERENCE DRAWING GROUP D 109
Tables 110
REFERENCE DRAWING GROUP E 112
REFERENCE DRAWING GROUP F Tables 116
REFERENCE DRAWING GROUP F 118
REFERENCE DRAWING GROUP G Tables 122
REFERENCE DRAWING GROUP G 123
REFERENCE DRAWING GROUP H Tables 124
REFERENCE DRAWING GROUP H 125
REFERENCE DRAWING GROUP J Tables 126
REFERENCE DRAWING GROUP J 127
REFERENCE DRAWING GROUP K Tables 128
REFERENCE DRAWING GROUP K 131
REFERENCE DRAWING GROUP L Tables 148
REFERENCE DRAWING GROUP L 149
REFERENCE DRAWING GROUP M Tables 150
REFERENCE DRAWING GROUP M 153
REFERENCE DRAWING GROUP N Tables 161
REFERENCE DRAWING GROUP N 163
REFERENCE DRAWING GROUP P Tables 168
REFERENCE DRAWING GROUP P 169
REFERENCE DRAWING GROUP Q Tables 170
REFERENCE DRAWING GROUP Q 171

REFERENCE DRAWING GROUP A Tables
NOTES AND INSTRUCTIONS

INDEX OF MASTER REQUIREMENT CODES

1. ABBREVIATIONS USED:c - centerlineCBORE - counterboreCSK - countersinkDIA - diameterMAX - maximumMIN - minimumTHD - threadTYP - typical (same dimension applies to obviously similar features shown elsewhere on drawing)

2. NOTES: A. See paragraph 4 of General Information in this FIIG for special instructions concerning linear measurements.B. Angular measurements will be entered to the nearest tenth of a degree.C. A reply must be given for all dimensional MRCs of the style selected in reply to Master Requirement Code STYL.D. The reference drawings contained in Appendix B reflect basic configurations and are not restricted to an exact scale. Unless otherwise noted on the reference drawing, items to be described need not have features in the same size relationship (proportion) to each other as those shown (i.e., lengths, widths, diameters, heights of individual features may be lesser or greater than shown). An item may include mounting and/or conductor attaching hardware not shown in the reference drawing.E. Unless otherwise indicated, mounting and conductor attaching hardware, nuts, flat washers, and lock washers, are included on drawings for reference only. Actual quantity and type of hardware furnished is covered by MRC TMQY in Section III.F. Unless otherwise specified by a dimension or note on the illustration, items may have rounded or squared corners and edges.

Enter the applicable Reply Codes from Tables 1 and 2 below, followed by the numeric value. (e.g., ABKVJAA1.250*; ABKVJLA25.4*; ABKVJAB1.245$$JAC1.255*).

REPLY CODE	REPLY (AA05)
A	INCHES
L	MILLIMETERS

REPLY CODE	REPLY (AC20)
A	NOMINAL
B	MINIMUM
C	MAXIMUM

MRC	Mode Code	Name of Dimension
AARX	J	INSIDE DIAMETER
ABKV	J	OUTSIDE DIAMETER
ABKW	J	OVERALL HEIGHT
AJQL	J	TOP DIAMETER

MRC	Mode Code	Name of Dimension
ALHL	J	SIDE LENGTH
CQBH	J	FIRST END RADIUS
CQLM	J	SECOND END RADIUS
CRWK	J	FIRST SIDE RADIUS

REFERENCE DRAWING GROUP A

INSULATOR, BEAD

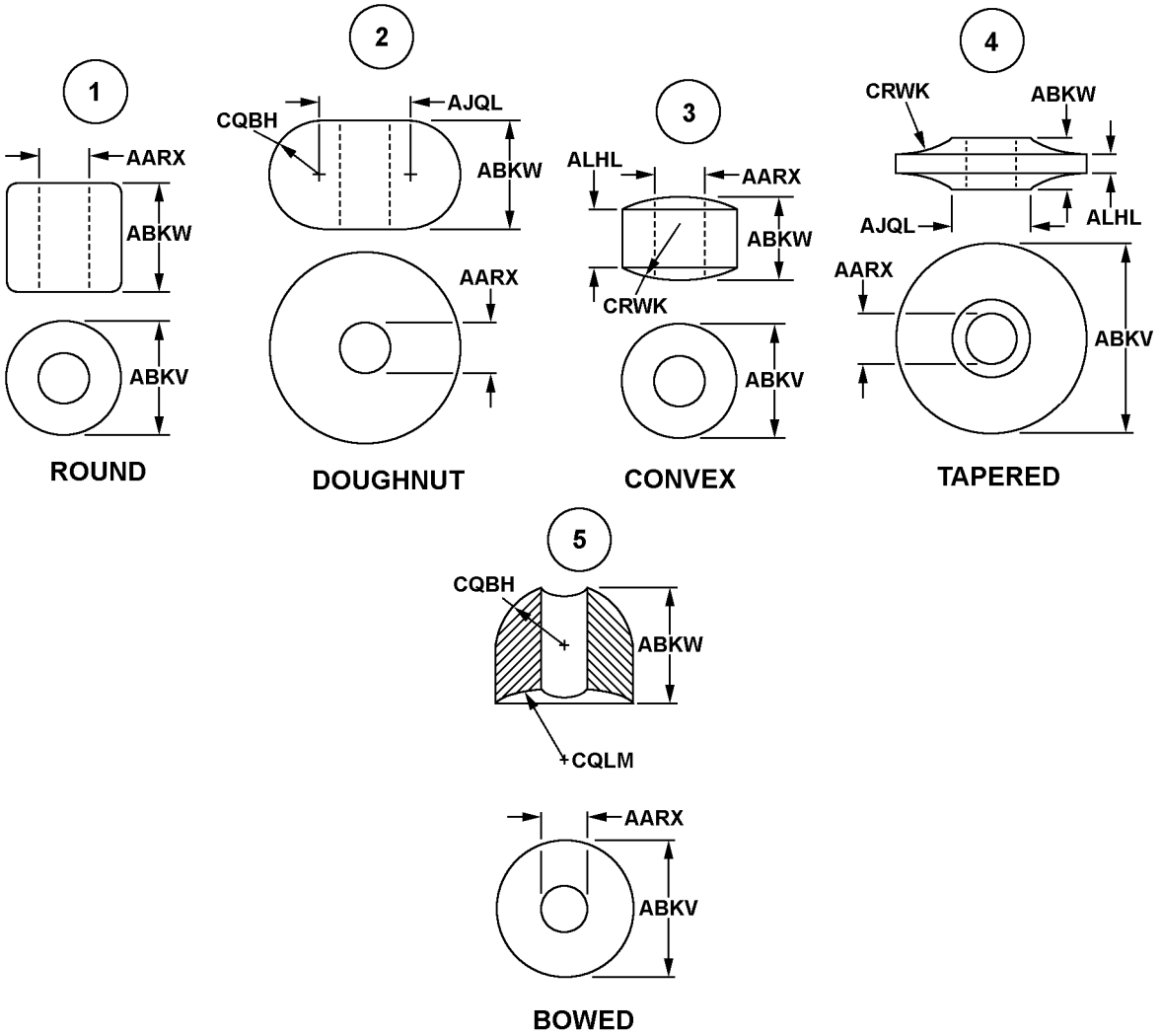

REFERENCE DRAWING GROUP B Tables
INSULATOR, BOWL

INDEX OF MASTER REQUIREMENT CODES

NOTE: IN REFERENCE DRAWING GROUP B, STYLES 2, 4, AND 6, THE OPTIONAL SHAPE CANNOT BE SELECTED IF THE CYLINDRICAL SIDES EXCEED 25 PERCENT OF DIMENSION MRC AYGJ. Enter the applicable Reply Codes from Tables 1 and 2 below, followed by the numeric value. (e.g., ABHPJAA1.250*; ABHPJLA25.4*; ABHPJAB1.245$$JAC1.255*)

REPLY CODE	REPLY (AA05)
A	INCHES
L	MILLIMETERS

REPLY CODE	REPLY (AC20)
A	NOMINAL
B	MINIMUM
C	MAXIMUM

MRC	Mode Code	Name of Dimension
ABGA	J	GROOVE DEPTH
ABHP	J	OVERALL LENGTH
ABKU	J	FLANGE THICKNESS
ABKV	J	OUTSIDE DIAMETER
ABKW	J	OVERALL HEIGHT
ABMK	J	OVERALL WIDTH
ABTB	J	MOUNTING HOLE DIAMETER
ADUW	J	CENTER HOLE LENGTH
ADUX	J	CENTER HOLE WIDTH
AFFL	J	MOUNTING BOLT CIRCLE DIAMETER
AGHG	J	CHAMFER DEPTH
AGPX	J	SHOULDER OUTSIDE DIAMETER
AJQL	J	TOP DIAMETER
AJQM	J	BOWL DIAMETER
AYGJ	J	HEIGHT ABOVE MOUNTING SURFACE
BGJZ	J	BASE INSIDE DIAMETER
BQCT	J	TOP HOLE DIAMETER
BXCZ	J	FIRST COUNTERBORE DIAMETER
CFNT	J	FIRST COUNTERBORE DEPTH

MRC	Mode Code	Name of Dimension
CQBJ	J	TOP THICKNESS
CQBL	J	FIFTH MOUNTING HOLE SPACING
CQBM	J	MOUNTING CLAMP WIDTH
CQBR	J	FIRST RELIEF SLOT LENGTH
CQDD	J	THIRD MOUNTING HOLE SPACING
CQDM	J	SEVENTH MOUNTING HOLE SPACING
CQFZ	J	CENTER STUD HOLE DEPTH
CQHB	J	SHIELD DIAMETER
CQHR	J	MOUNTING CLAMP TONGUE LENGTH
CQKY	J	FIRST MOUNTING HOLE SPACING
CQLF	J	GASKET THICKNESS
CQLJ	J	MAJOR GROOVE DIAMETER
CQPP	J	DISTANCE FROM DOME HOLE CENTER TO DESIGNATED POINT
CQSF	J	CENTER STUD LENGTH
CRCX	J	TERMINAL WIRE HOLE DEPTH
CRDH	J	FIRST RELIEF SLOT DEPTH
CRDS	J	MOUNTING CLAMP STEP HEIGHT
CRDT	J	SHOULDER NOTCH WIDTH
CRFB	J	CENTER TO CENTER DISTANCE BETWEEN DOME HOLES
CRGB	J	FOURTH MOUNTING HOLE SPACING
CRGL	J	MOUNTING CLAMP FLAT LENGTH
CRJK	J	CENTER STUD HOLE DIAMETER
CRJN	J	SECOND MOUNTING HOLE SPACING
CRKQ	J	SHIELD HEIGHT
CRNK	J	MINOR GROOVE DIAMETER
CRRZ	J	TERMINAL WIRE HOLE DIAMETER
CRTT	J	SHOULDER DEPTH
CRXG	J	SIXTH MOUNTING HOLE SPACING

Enter the numeric value. (e.g., AATEB45.0*)

MRC	Mode Code	Name of Dimension
AATE	B	CHAMFER ANGLE IN DEG
ABYZ	B	GROOVE ANGLE IN DEG
ABZP	B	SHOULDER FLAT ANGLE IN DEG

REFERENCE DRAWING GROUP B

INSULATOR, BOWL

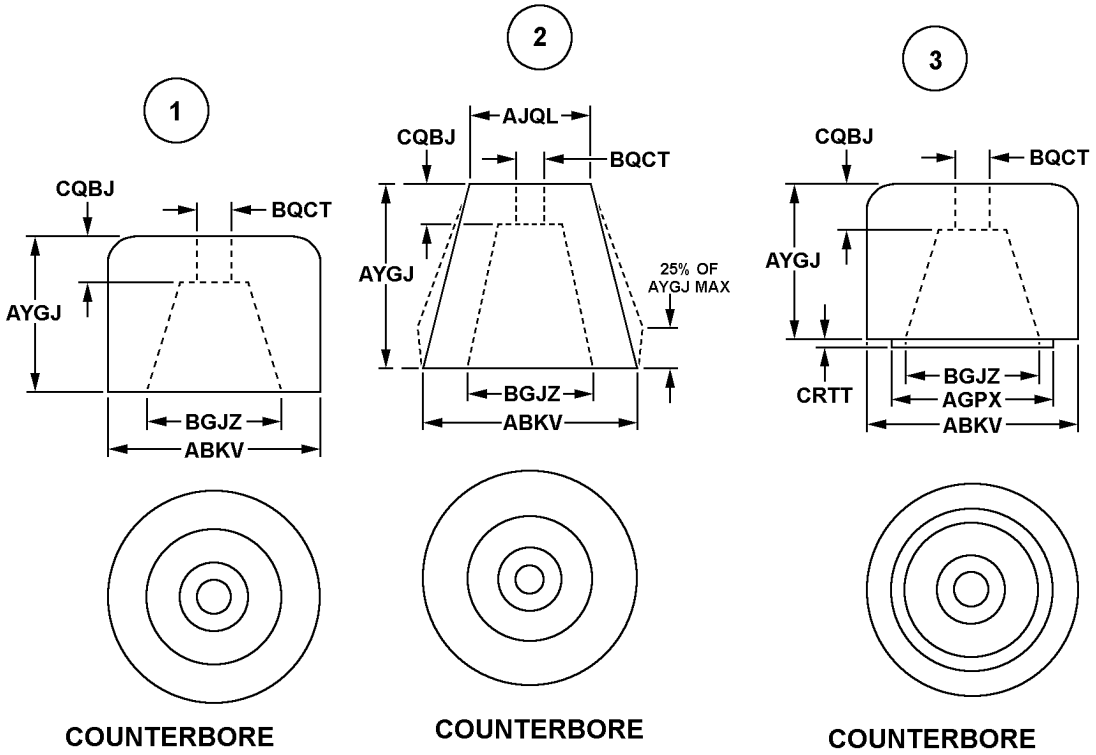

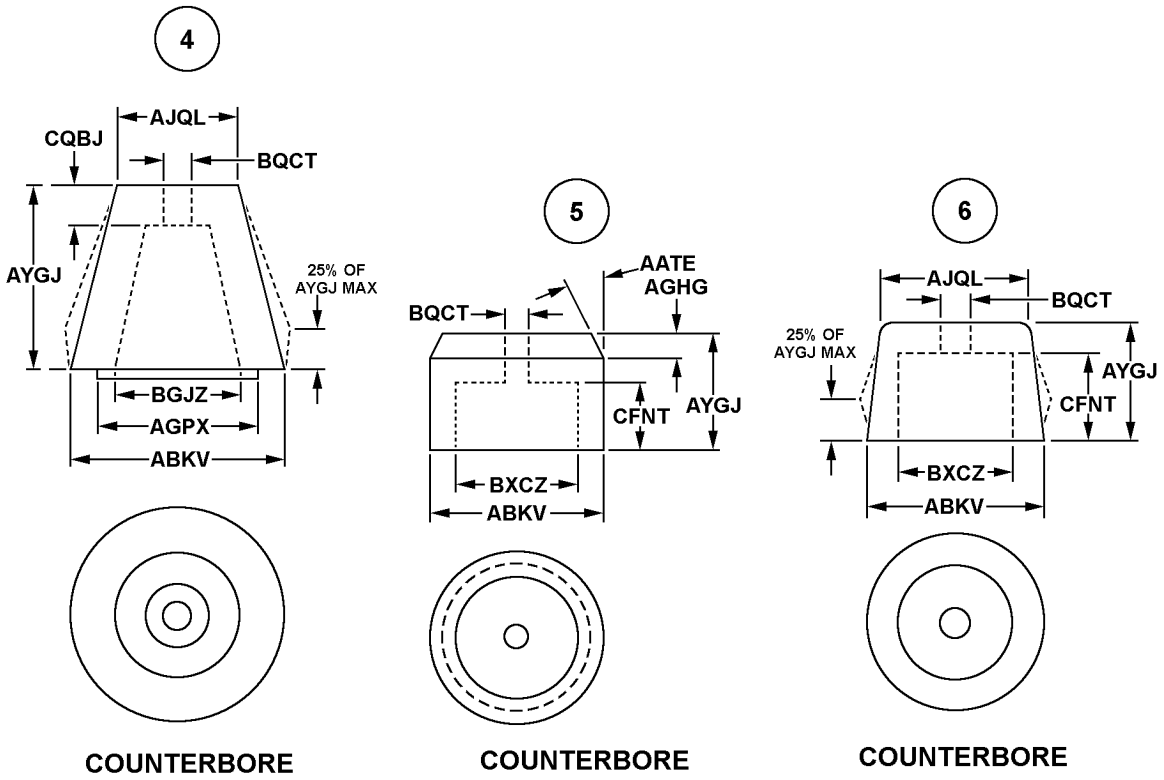
4
AJQL
CQBJ
BQCT
AYGJ
25% OF
AYGJ MAX
BGJZ
AGPX
ABKV
COUNTERBORE
5
AATE
AGHG
BQCT
CFNT
AYGJ
BXCZ
ABKV
COUNTERBORE
6
AJQL
BQCT
25% OF
AYGJ MAX
AYGJ
CFNT
BXCZ
ABKV
COUNTERBORE

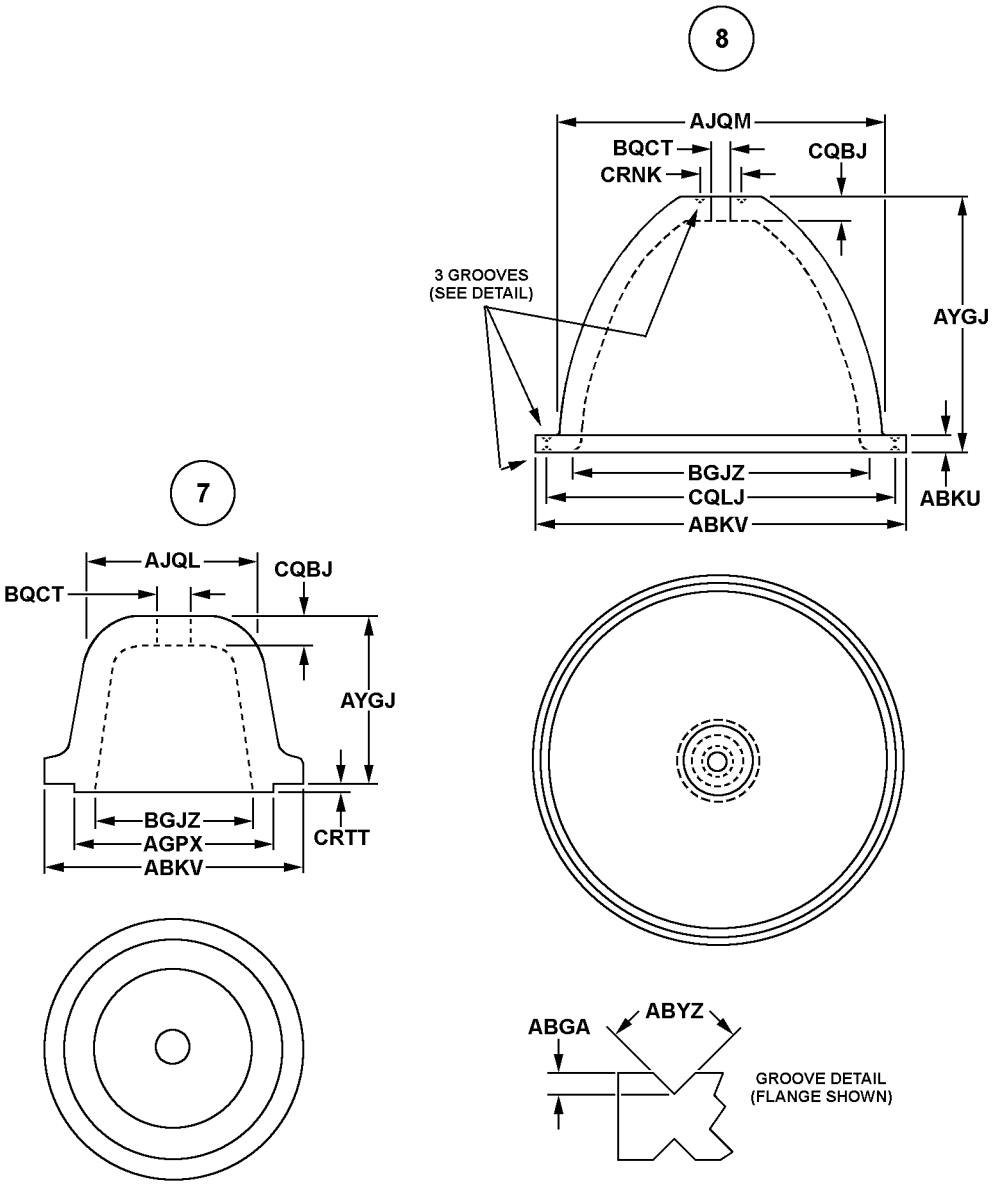

BELL, FLANGED

DOME, FLANGED

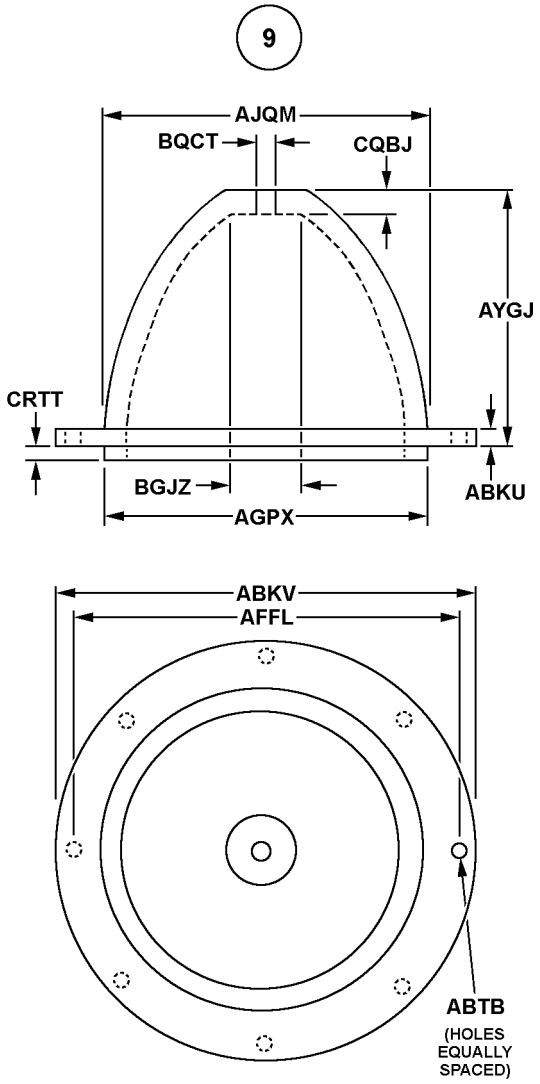

DOME, FLANGED

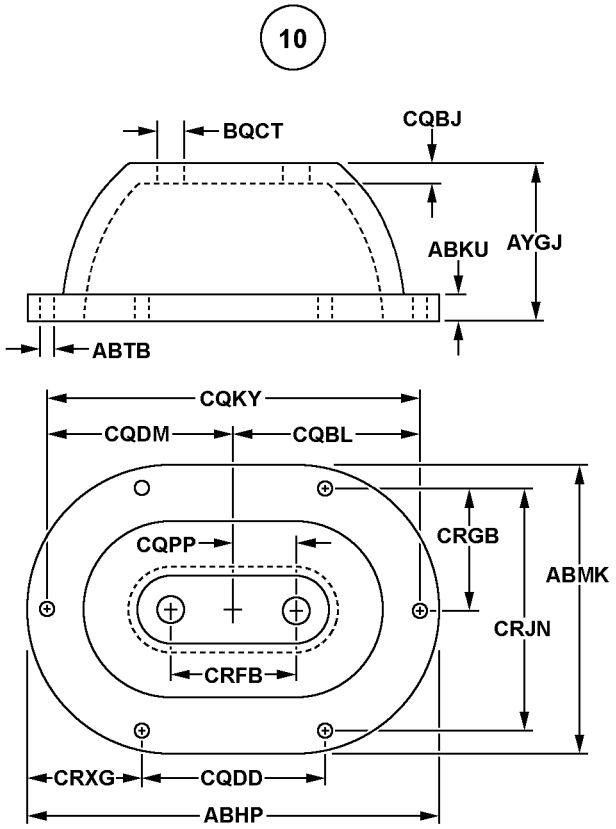

OVAL, FLANGED

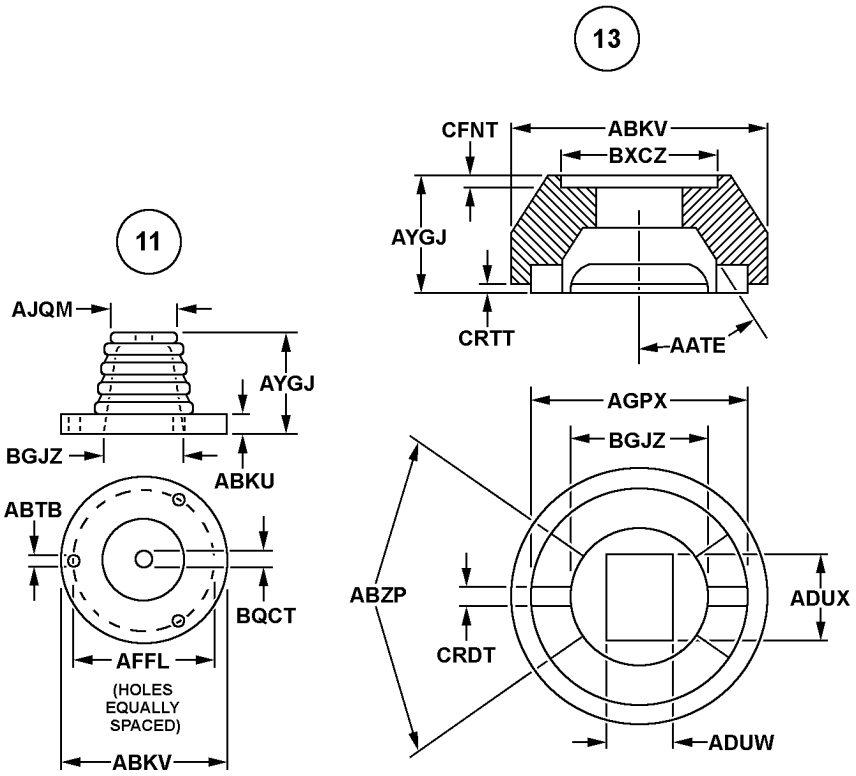

CORRUGATED

TAPERED, COUNTERSINK

17

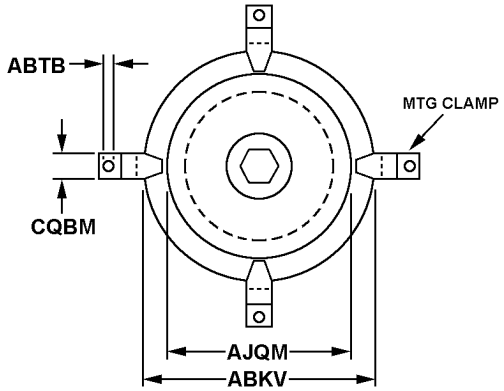

16

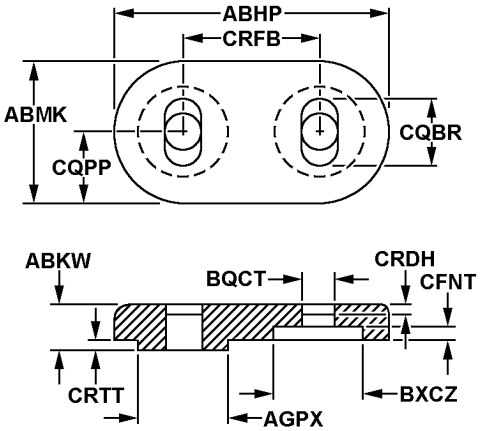

OVAL, COUNTERSINK

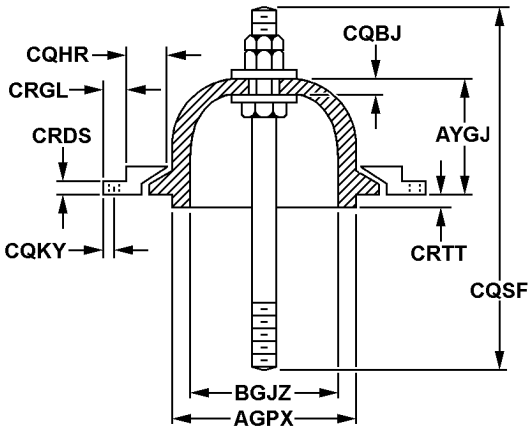

BELL, FLANGED

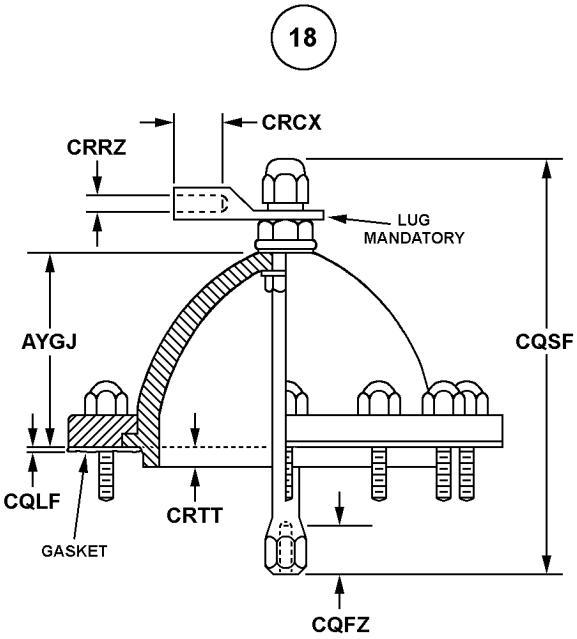

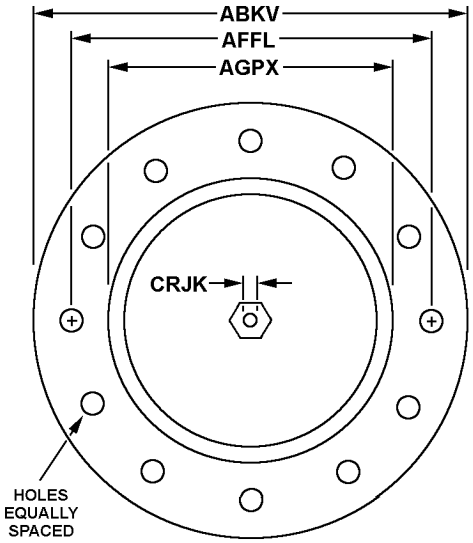

DOME, FLANGED

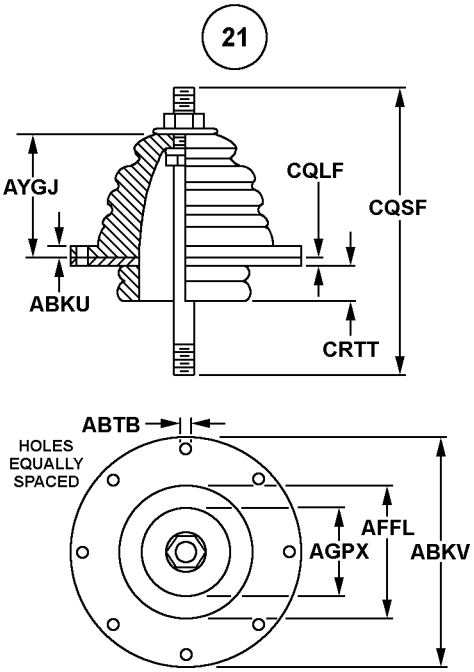

CORRUGATED

23

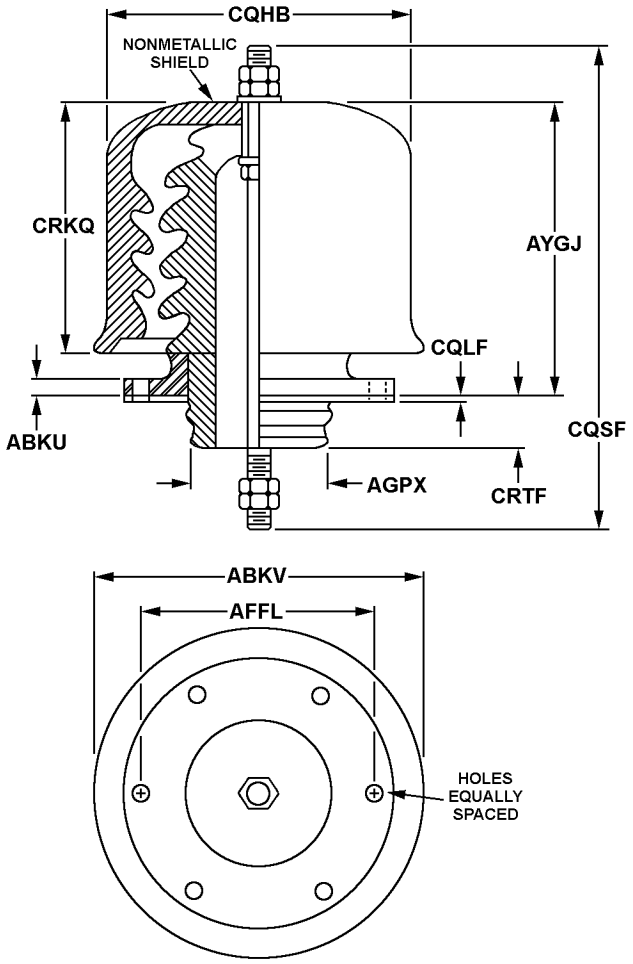

CORRUGATED

REFERENCE DRAWING GROUP C Tables
INSULATOR, BUSHING

INDEX OF MASTER REQUIREMENT CODES

NOTE: IN REFERENCE DRAWING GROUP C, STYLES 5, 6, AND 39, IF THE COUNTERBORE DIAMETERS ARE DIFFERENT, THE SMALLER OF THE TWO DIAMETERS SHALL BE DETERMINED TO BE THE FIRST COUNTERBORE. IF THE COUNTERBORE DIAMETERS ARE THE SAME, THE SMALLER OF THE TWO DEPTHS SHALL BE DETERMINE TO BE THE FIRST COUNTERBORE. Enter the applicable Reply Codes from Tables 1 and 2 below, followed by the numeric value. (e.g., ABKVJAA1.250*; ABKVJLA25.4*; ABKVJAB1.245$$JAC1.255*)

REPLY CODE	REPLY (AA05)
A	INCHES
L	MILLIMETERS

REPLY CODE	REPLY (AC20)
A	NOMINAL
B	MINIMUM
C	MAXIMUM

MRC	Mode Code	Name of Dimension
AAGT	J	WALL THICKNESS
AARX	J	INSIDE DIAMETER
AASY	J	DISTANCE FROM CENTERLINE TO FLAT
AATR	J	SHANK LENGTH
ABGB	J	WIDTH ACROSS CORNERS
ABHP	J	OVERALL LENGTH
ABKU	J	FLANGE THICKNESS
ABKV	J	OUTSIDE DIAMETER
ABKW	J	OVERALL HEIGHT
ABMK	J	OVERALL WIDTH
ABPR	J	FIRST STEP DIAMETER
ABPT	J	SECOND STEP DIAMETER
ABQR	J	COUNTERSINK MAJOR DIAMETER
ABRC	J	FIRST HOLE DIAMETER
ABRD	J	SECOND HOLE DIAMETER
ABTB	J	MOUNTING HOLE DIAMETER
ACVR	J	SHANK WIDTH

MRC	Mode Code	Name of Dimension
ADUW	J	CENTER HOLE LENGTH
ADUX	J	CENTER HOLE WIDTH
AFFL	J	MOUNTING BOLT CIRCLE DIAMETER
AGGZ	J	SHANK OUTSIDE DIAMETER
AGHG	J	CHAMFER DEPTH
AGPX	J	SHOULDER OUTSIDE DIAMETER
AJEK	J	FIRST STEP HEIGHT
AJHV	J	FIRST CORNER RADIUS
AJHW	J	SECOND CORNER RADIUS
AJQL	J	TOP DIAMETER
AJQM	J	BOWL DIAMETER
AQZQ	J	SHANK HEIGHT
ASDB	J	WIDTH ACROSS FLATS
BQCT	J	TOP HOLE DIAMETER
BXCZ	J	FIRST COUNTERBORE DIAMETER
BZLN	J	SECOND COUNTERBORE DIAMETER
CCFJ	J	SECOND COUNTERBORE DEPTH
CFNT	J	FIRST COUNTERBORE DEPTH
CQBH	J	FIRST END RADIUS
CQBR	J	FIRST RELIEF SLOT LENGTH
CQBS	J	FIRST KEY WIDTH
CQDD	J	THIRD MOUNTING HOLE SPACING
CQDN	J	FIRST SLOT WIDTH
CQJD	J	FIRST KEY DEPTH
CQKD	J	DISTANCE FROM FLANGE TO WIRE GROOVE EDGE
CQKY	J	FIRST MOUNTING HOLE SPACING
CQMT	J	SECOND KEY THICKNESS
CQSH	J	FIRST HOLE SPACING
CQWC	J	SECOND STEP HEIGHT
CQZZ	J	DISTANCE FROM OUTSIDE FLATTED PORTION TO OPPOSITE SURFACE
CRBF	J	FIRST KEY THICKNESS
CRDH	J	FIRST RELIEF SLOT DEPTH
CRDM	J	SECOND KEY WIDTH
CRGB	J	FOURTH MOUNTING HOLE SPACING
CRGK	J	SECOND KEY DEPTH
CRJN	J	SECOND MOUNTING HOLE SPACING
CRKY	J	SECOND HOLE SPACING
CRLF	J	FIRST RELIEF SLOT WIDTH
CRNH	J	DISTANCE FROM INSIDE FLATTED PORTION TO OPPOSITE SURFACE
CRYZ	J	FIRST SLOT DEPTH

Enter the numeric value. (e.g., AATEB45.0*)

MRC	Mode Code	Name of Dimension
AATA	B	COUNTERSINK ANGLE IN DEG
AATE	B	CHAMFER ANGLE IN DEG

REFERENCE DRAWING GROUP C

INSULATOR, BUSHING

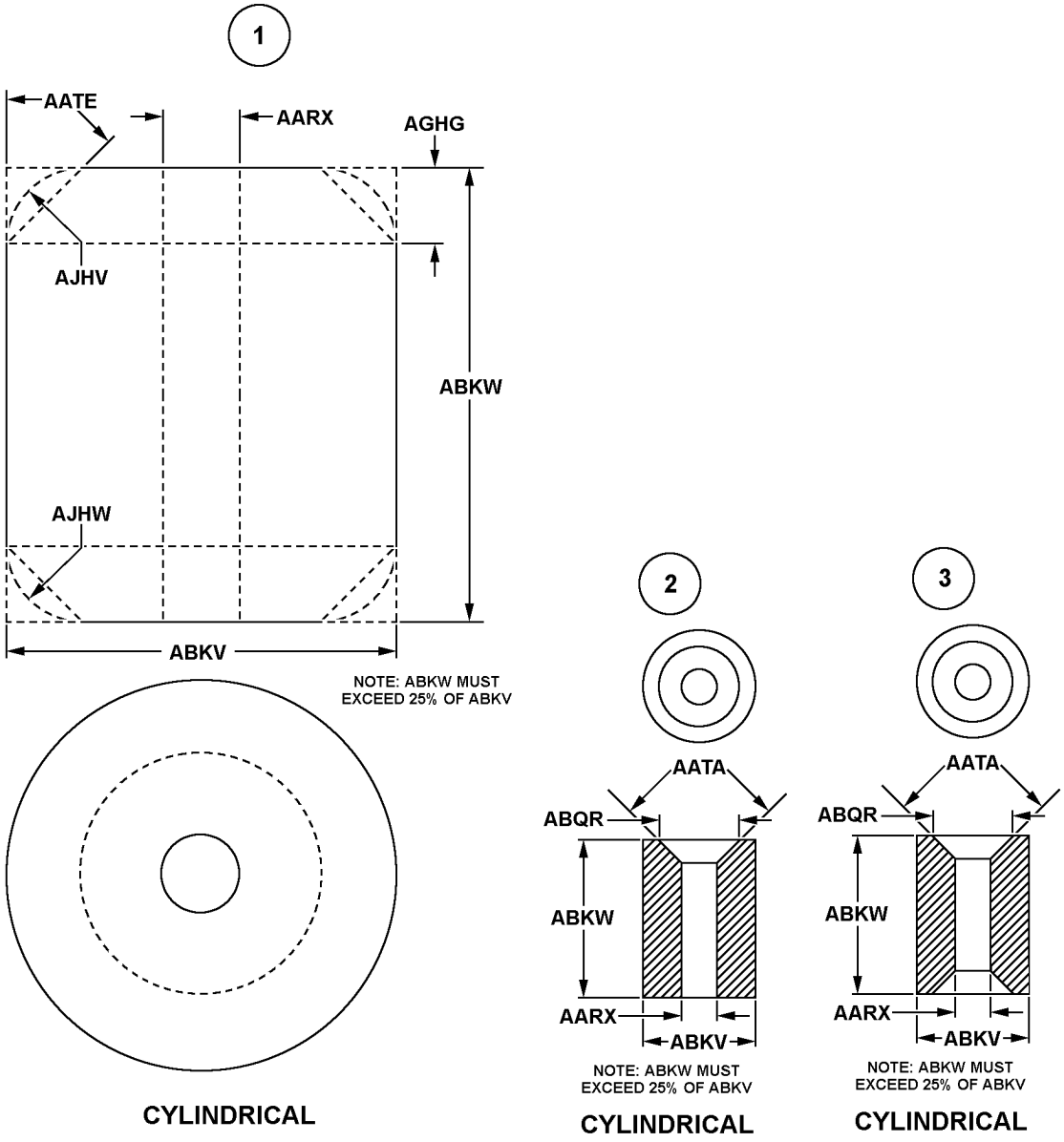

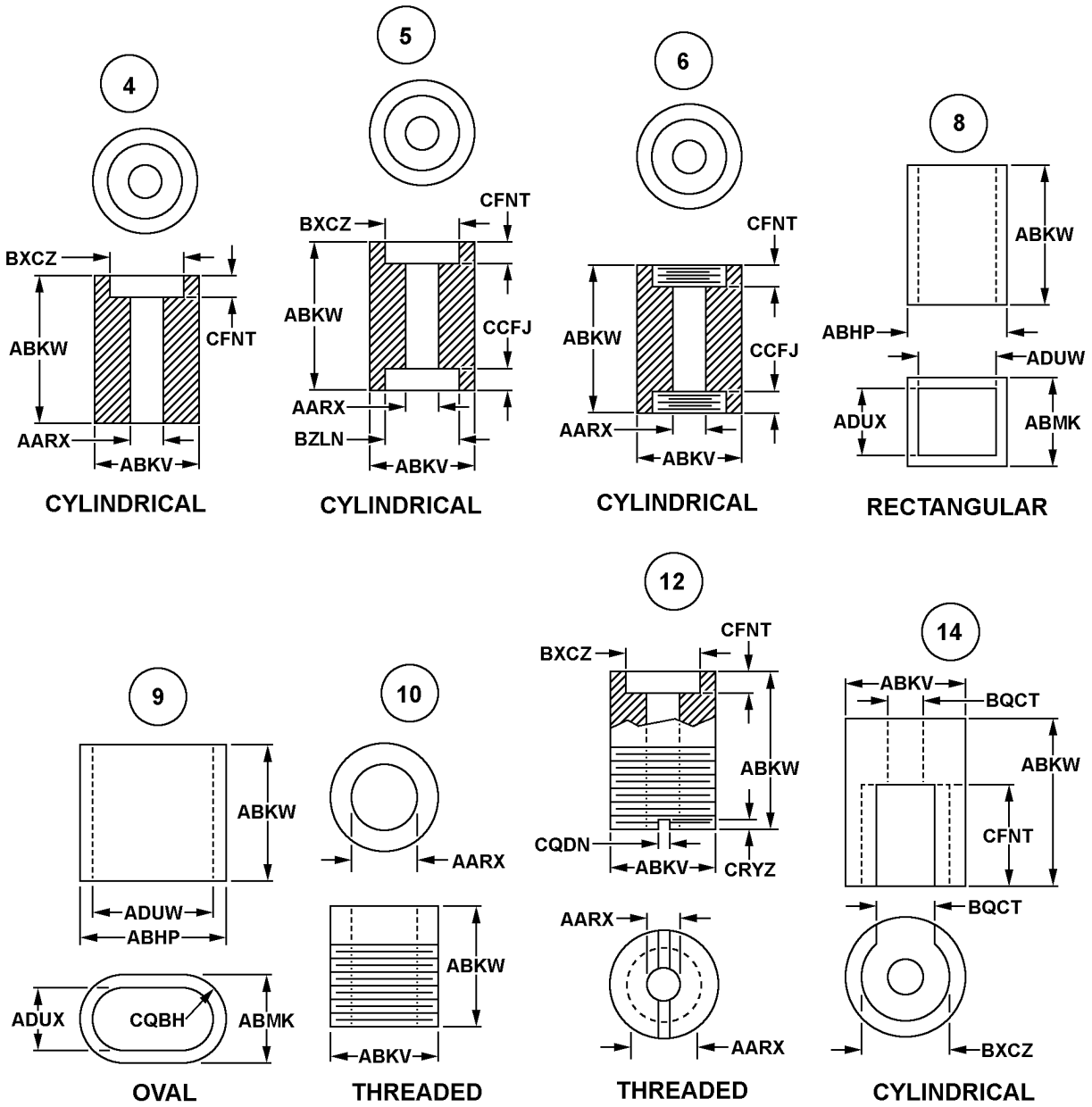
4
BXCZ
ABKW
CFNT
AARX
ABKV
CYLINDRICAL
5
CFNT
BXCZ
ABKW
CCFJ
AARX
BZLN
ABKV
CYLINDRICAL
6
CFNT
ABKW
CCFJ
AARX
ABKV
CYLINDRICAL
8
ABKW
ABHP
ADUW
ADUX
ABMK
RECTANGULAR
9
ABKW
ADUW
ABHP
ADUX
CQBH
ABMK
OVAL
10
AARX
ABKW
ABKV
THREADED
12
CFNT
BXCZ
ABKW
CQDN
ABKV
CRYZ
AARX
AARX
THREADED
14
ABKV
BQCT
ABKW
CFNT
BQCT
BXCZ
CYLINDRICAL

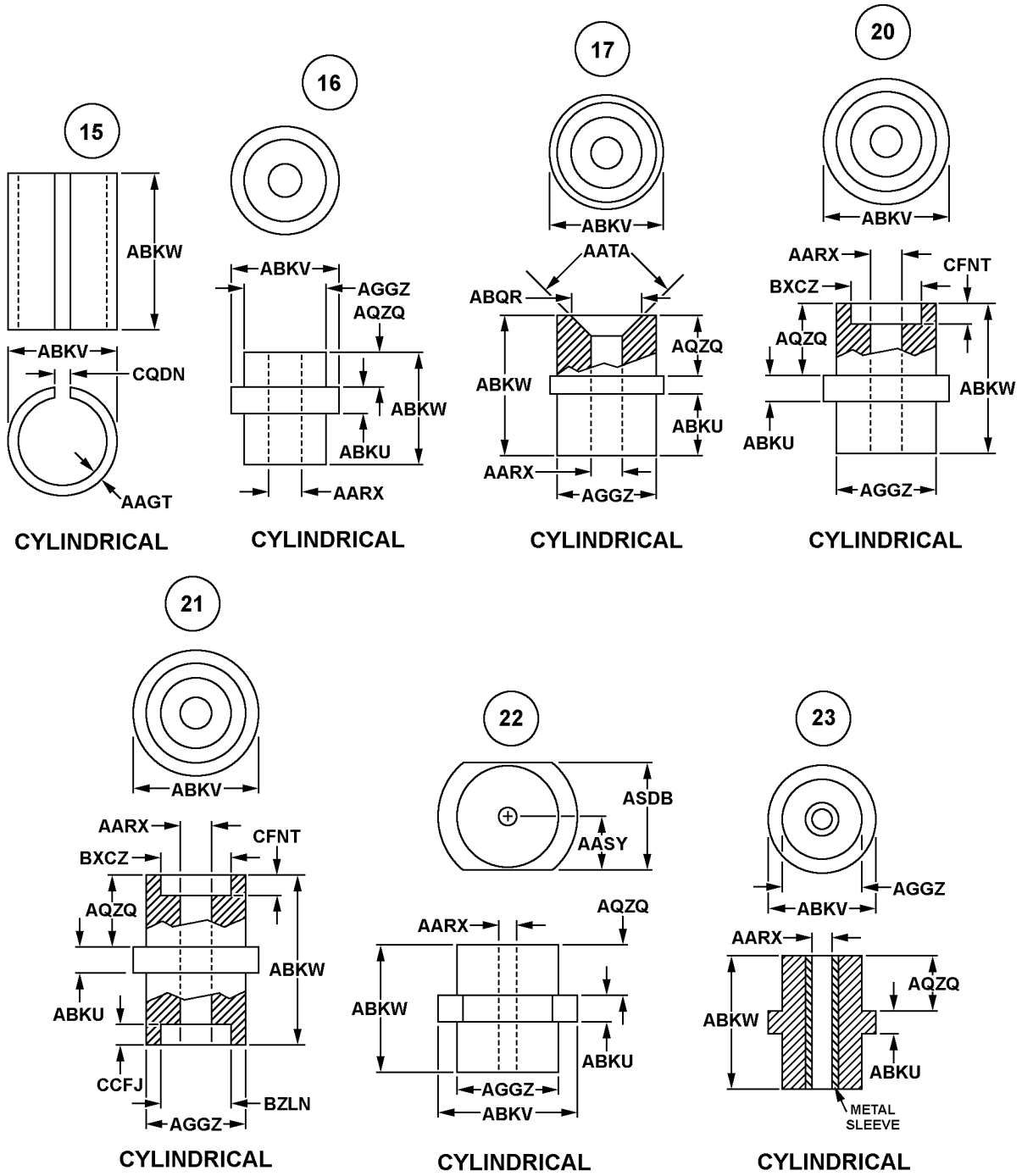
15
ABKW
ABKV
CQDN
AAGT
CYLINDRICAL
16
ABKV
AGGZ
AQZQ
ABKW
ABKU
AARX
CYLINDRICAL
17
ABKV
AATA
ABQR
AQZQ
ABKW
ABKU
AARX
AGGZ
CYLINDRICAL
20
ABKV
AARX
CFNT
BXCZ
AQZQ
ABKW
ABKU
AGGZ
CYLINDRICAL
21
ABKV
AARX
CFNT
BXCZ
AQZQ
ABKW
ABKU
CCFJ
BZLN
AGGZ
CYLINDRICAL
22
ASDB
AASY
AQZQ
AARX
ABKW
ABKU
AGGZ
ABKV
CYLINDRICAL
23
AGGZ
ABKV
AARX
AQZQ
ABKW
ABKU
METAL
SLEEVE
CYLINDRICAL

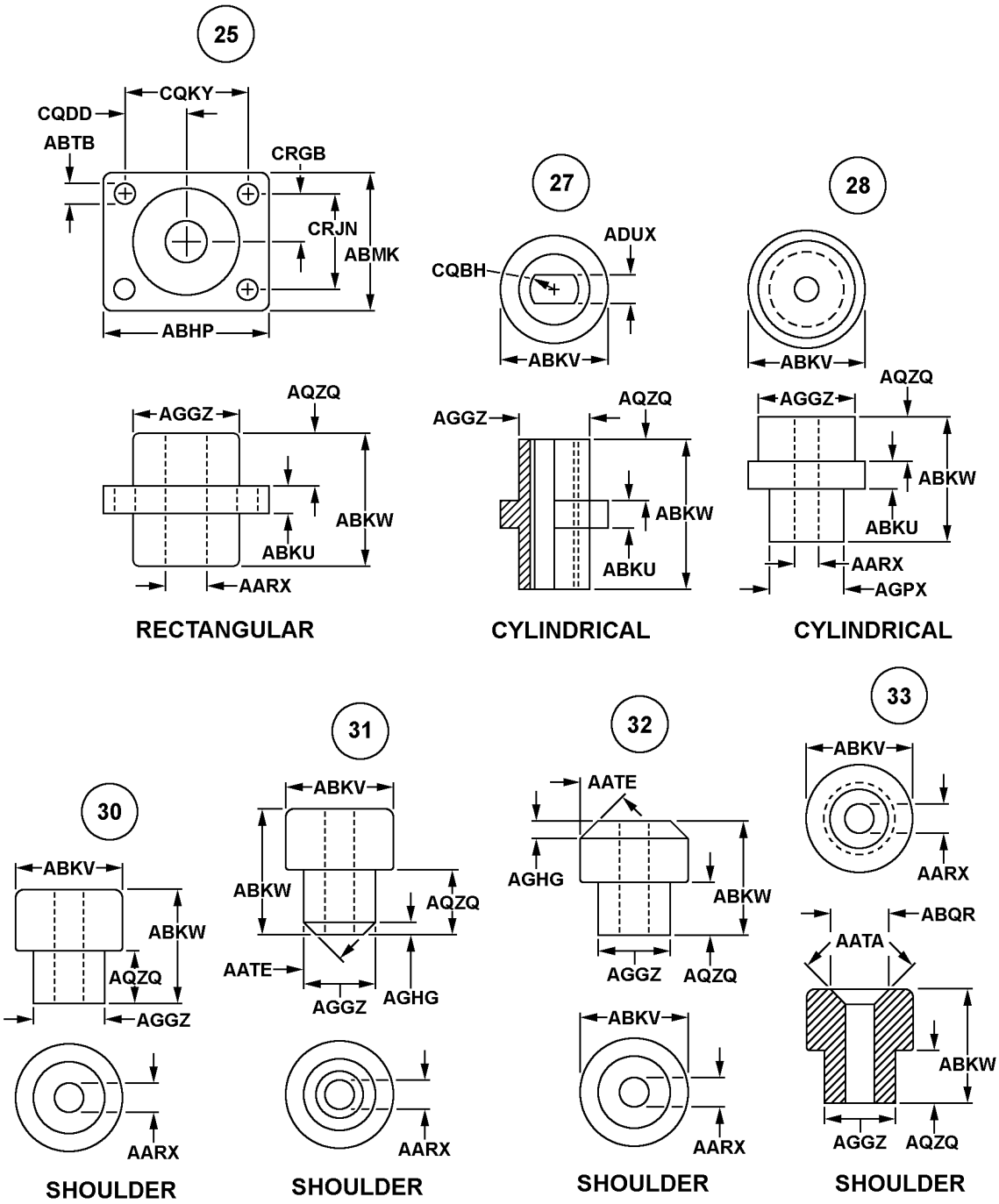
25
CQKY
CQDD
ABTB
CRGB
CRJN
ABMK
ABHP
AGGZ
AQZQ
ABKW
ABKU
AARX
RECTANGULAR
27
ADUX
CQBH
ABKV
AGGZ
AQZQ
ABKW
ABKU
CYLINDRICAL
28
ABKV
AGGZ
AQZQ
ABKW
ABKU
AARX
AGPX
CYLINDRICAL
30
ABKV
ABKW
AQZQ
AGGZ
AARX
SHOULDER
31
ABKV
ABKW
AQZQ
AATE
AGGZ
AGHG
AARX
SHOULDER
32
AATE
AGHG
ABKW
AGGZ
AQZQ
ABKV
AARX
SHOULDER
33
ABKV
AARX
ABQR
AATA
ABKW
AGGZ
AQZQ
SHOULDER

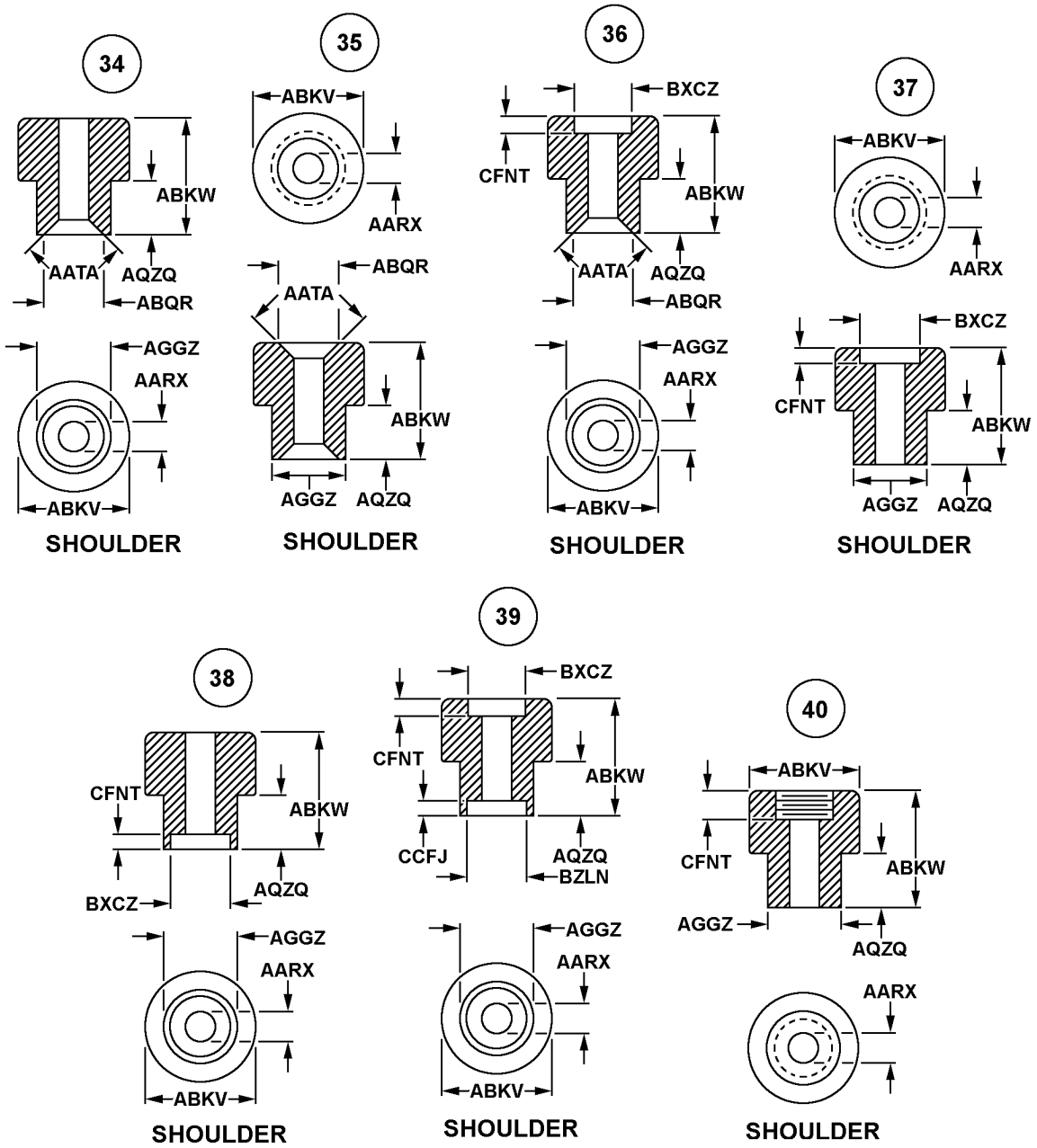
34
ABKW
AATA
AQZQ
ABQR
AGGZ
AARX
ABKV
SHOULDER
35
ABKV
AARX
ABQR
AATA
ABKW
AGGZ
AQZQ
SHOULDER
36
BXCZ
CFNT
ABKW
AATA
AQZQ
ABQR
AGGZ
AARX
ABKV
SHOULDER
37
ABKV
AARX
BXCZ
CFNT
ABKW
AGGZ
AQZQ
SHOULDER
38
CFNT
ABKW
BXCZ
AQZQ
AGGZ
AARX
ABKV
SHOULDER
39
BXCZ
CFNT
ABKW
CCFJ
AQZQ
BZLN
AGGZ
AARX
ABKV
SHOULDER
40
ABKV
CFNT
ABKW
AGGZ
AQZQ
AARX
SHOULDER

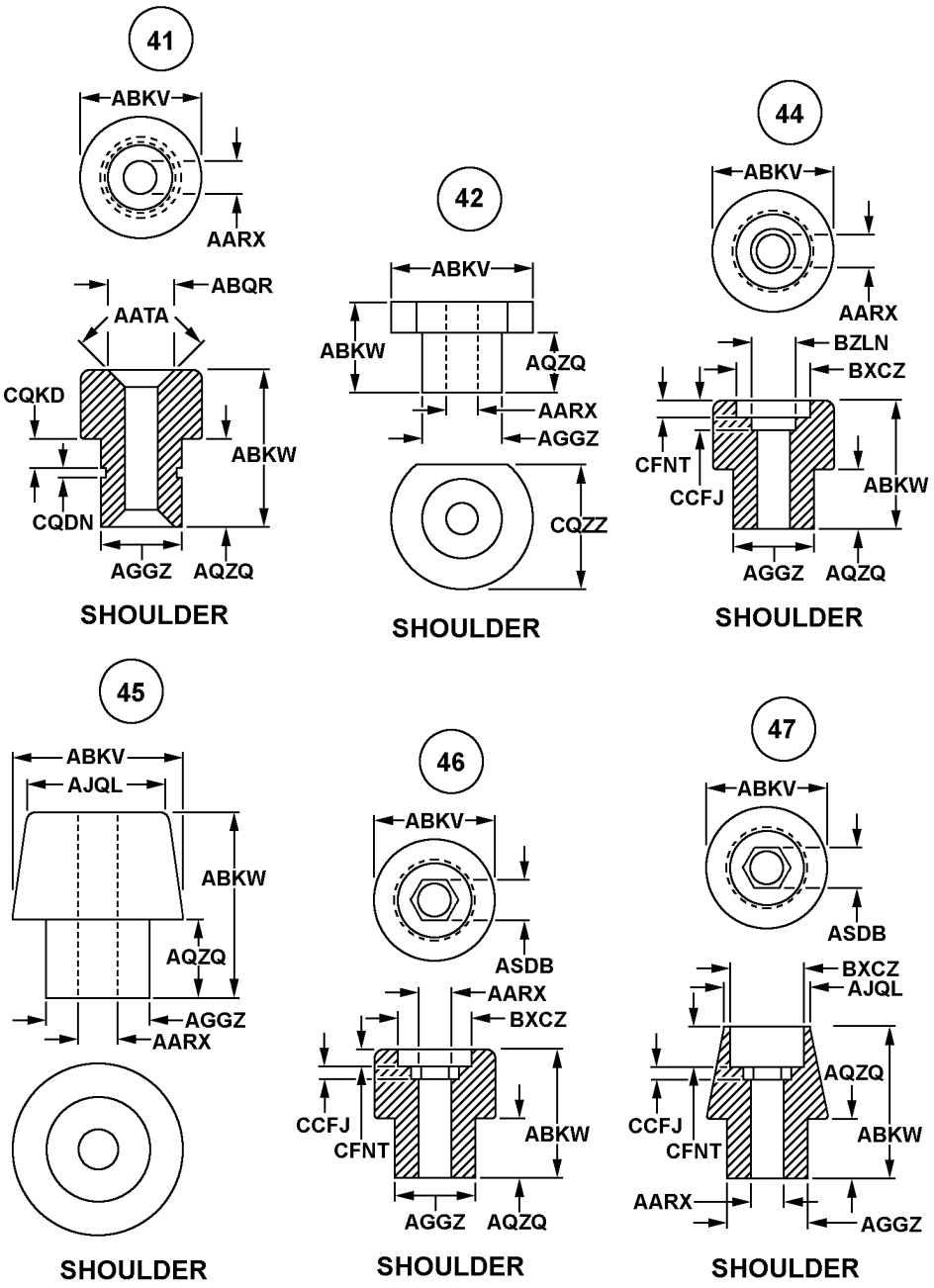
41
ABKV
AARX
ABQR
AATA
CQKD
ABKW
CQDN
AGGZ
AQZQ
SHOULDER
42
ABKV
ABKW
AQZQ
AARX
AGGZ
CQZZ
SHOULDER
44
ABKV
AARX
BZLN
BXCZ
CFNT
CCFJ
ABKW
AGGZ
AQZQ
SHOULDER
45
ABKV
AJQL
ABKW
AQZQ
AGGZ
AARX
SHOULDER
46
ABKV
ASDB
AARX
BXCZ
CCFJ
CFNT
ABKW
AGGZ
AQZQ
SHOULDER
47
ABKV
ASDB
BXCZ
AJQL
AQZQ
CCFJ
CFNT
ABKW
AARX
AGGZ
SHOULDER

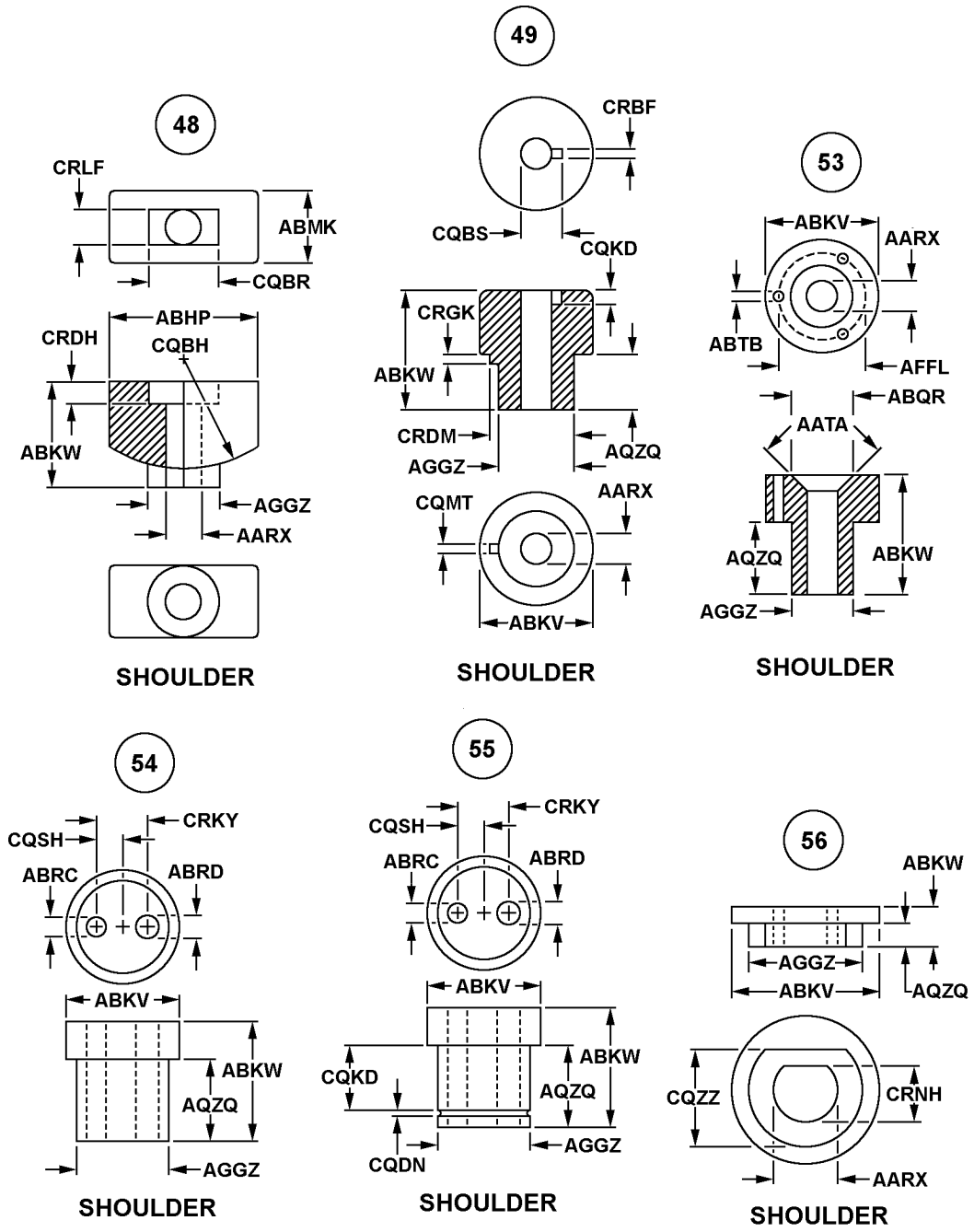
48
CRLF
ABMK
CQBR
ABHP
CRDH
CQBH
ABKW
AGGZ
AARX
SHOULDER
49
CRBF
CQBS
CQKD
CRGK
ABKW
CRDM
AGGZ
AQZQ
CQMT
AARX
ABKV
SHOULDER
53
ABKV
AARX
ABTB
AFFL
ABQR
AATA
AQZQ
ABKW
AGGZ
SHOULDER
54
CQSH
CRKY
ABRC
ABRD
ABKV
ABKW
AQZQ
AGGZ
SHOULDER
55
CQSH
CRKY
ABRC
ABRD
ABKV
CQKD
ABKW
AQZQ
AGGZ
CQDN
SHOULDER
56
ABKW
AGGZ
ABKV
AQZQ
CQZZ
CRNH
AARX
SHOULDER

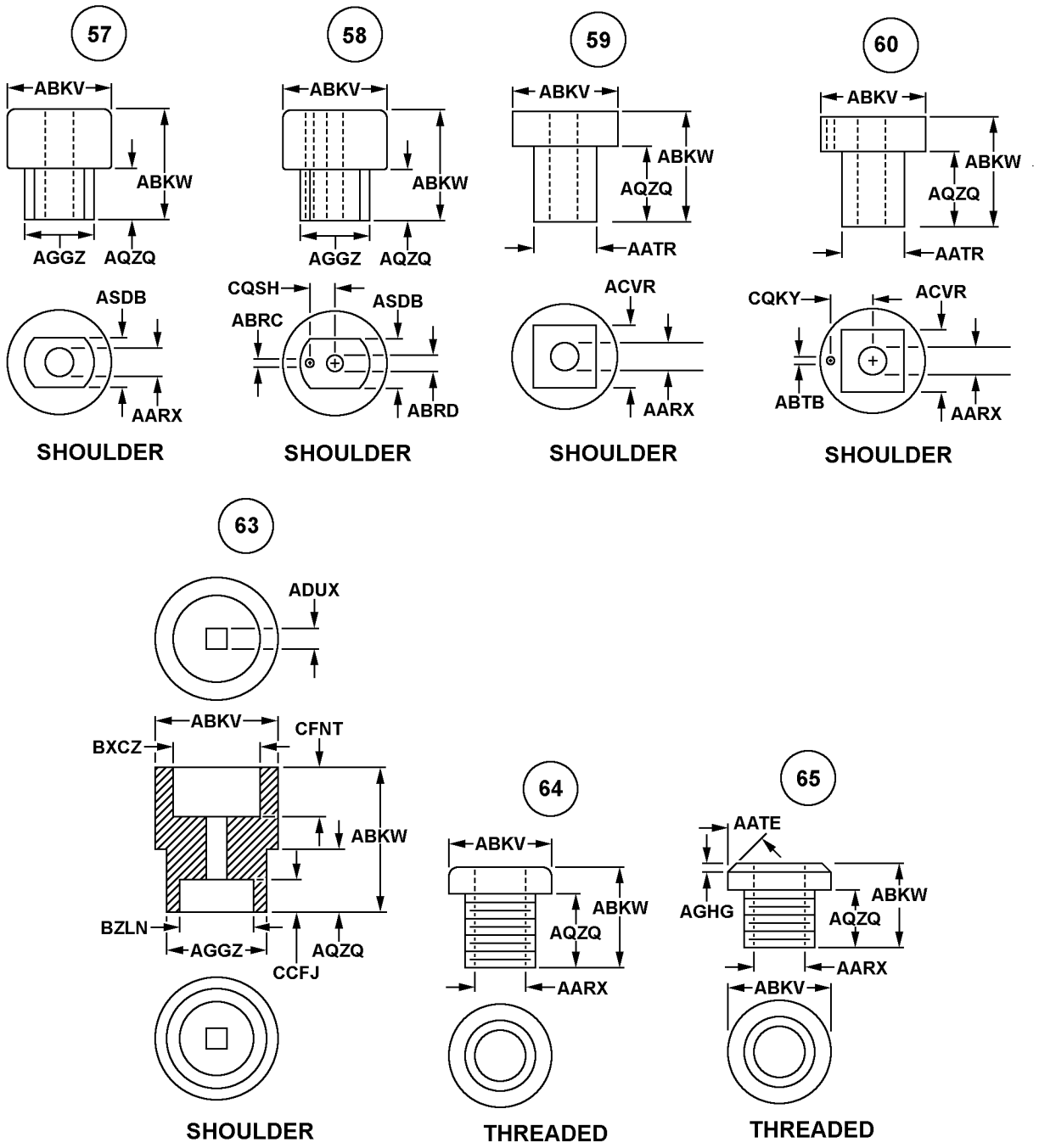
57
ABKV
ABKW
AGGZ
AQZQ
ASDB
AARX
SHOULDER
58
ABKV
ABKW
AGGZ
AQZQ
CQSH
ASDB
ABRC
ABRD
SHOULDER
59
ABKV
ABKW
AQZQ
AATR
ACVR
AARX
SHOULDER
60
ABKV
ABKW
AQZQ
AATR
CQKY
ACVR
ABTB
AARX
SHOULDER
63
ADUX
ABKV
CFNT
BXCZ
ABKW
BZLN
AGGZ
AQZQ
CCFJ
SHOULDER
64
ABKV
ABKW
AQZQ
AARX
THREADED
65
AATE
AGHG
ABKW
AQZQ
AARX
ABKV
THREADED

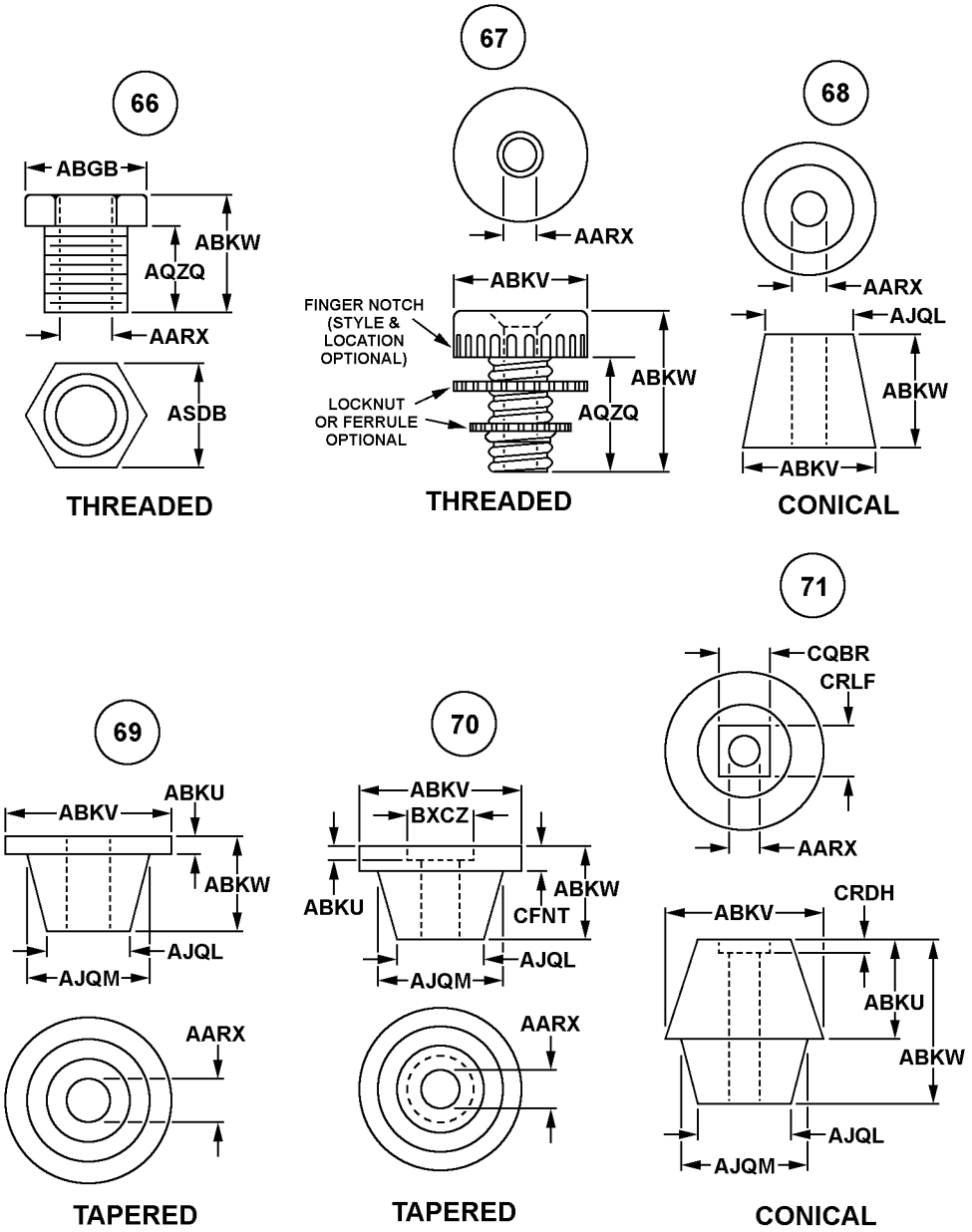
66
ABGB
ABKW
AQZQ
AARX
ASDB
THREADED
67
AARX
ABKV
FINGER NOTCH
(STYLE &
LOCATION
OPTIONAL)
ABKW
LOCKNUT
OR FERRULE
OPTIONAL
AQZQ
THREADED
68
AARX
AJQL
ABKW
ABKV
CONICAL
69
ABKV
ABKU
ABKW
AJQL
AJQM
AARX
TAPERED
70
ABKV
BXCZ
ABKU
ABKW
CFNT
AJQL
AJQM
AARX
TAPERED
71
CQBR
CRLF
AARX
ABKV
CRDH
ABKU
ABKW
AJQL
AJQM
CONICAL

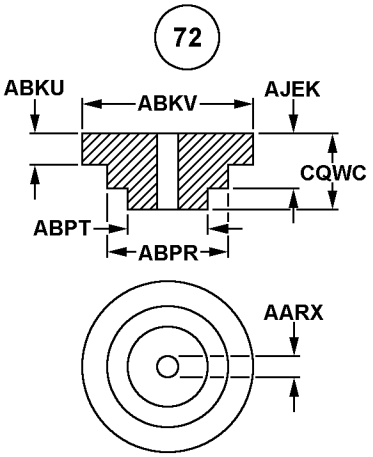

STEPPED, ROUND

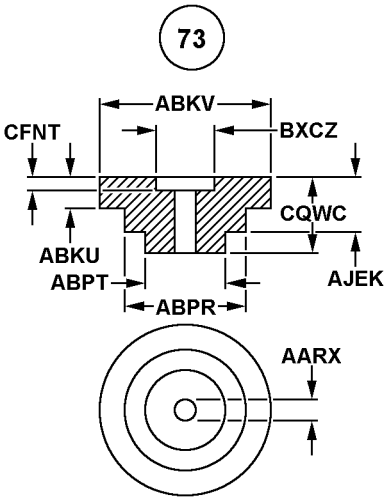

STEPPED, ROUND

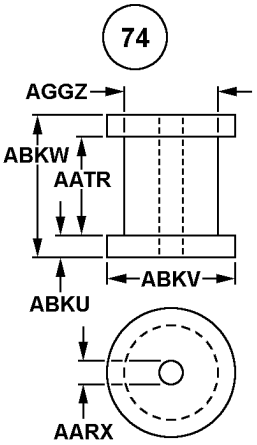

SPOOL

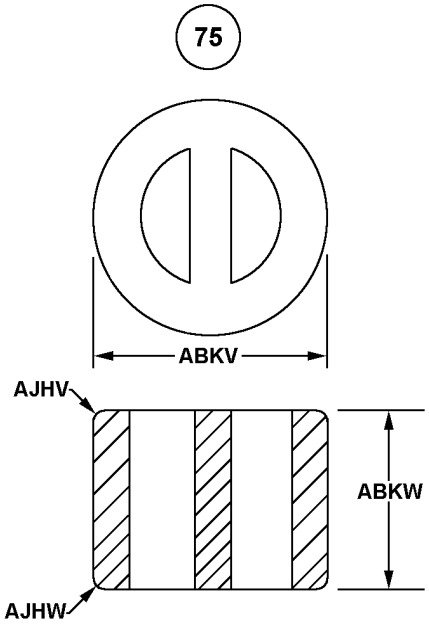

CYLINDRICAL

REFERENCE DRAWING GROUP D Tables
INSULATOR, CLEAT

INDEX OF MASTER REQUIREMENT CODES

Enter the applicable Reply Codes from the Table 1 and 2 below, followed by the numeric value. (e.g., ABHPJAA1.250*; ABHPJLA25.4*; ABHPJAB1.245$$JAC1.255*)

REPLY CODE	REPLY (AA05)
A	INCHES
L	MILLIMETERS

REPLY CODE	REPLY (AC20)
A	NOMINAL
B	MINIMUM
C	MAXIMUM

MRC	Mode Code	Name of Dimension
ABHP	J	OVERALL LENGTH
ABMK	J	OVERALL WIDTH
ABTB	J	MOUNTING HOLE DIAMETER
CQBX	J	SECOND DISTANCE FROM CONDUCTOR SLOT TO OPPOSITE SURFACE
CQGG	J	FIRST DISTANCE BETWEEN CONDUCTOR GROOVES
CQKY	J	FIRST MOUNTING HOLE SPACING
CQLL	J	SECOND DISTANCE BETWEEN CONDUCTOR GROOVES
CRJC	J	FIRST DISTANCE FROM CONDUCTOR GROOVE TO INSULATOR END
CRLT	J	CONDUCTOR SEPARATION DISTANCE
CRQT	J	DISTANCE BETWEEN CONDUCTOR GROOVE AND MOUNTING HOLE
CRWN	J	FIRST DISTANCE FROM CONDUCTOR SLOT TO OPPOSITE SURFACE

REFERENCE DRAWING GROUP D

INSULATOR, CLEAT

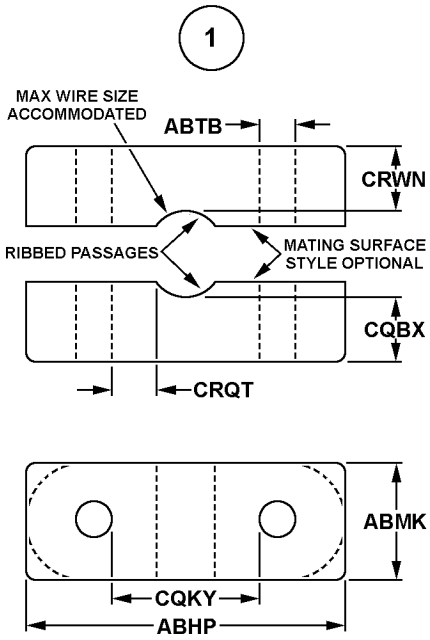

RECTANGULAR

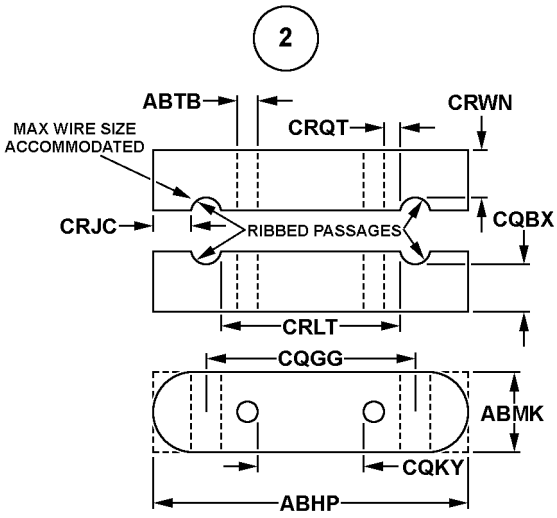

RECTANGULAR

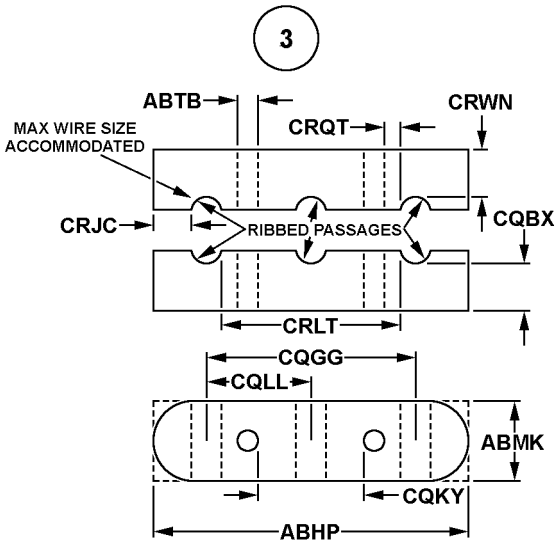

RECTANGULAR

Tables
INSULATOR, DISK

INDEX OF MASTER REQUIREMENT CODES

Enter the applicable Reply Codes from Tables 1 and 2 below, followed by the numeric value. (e.g., ABKVJAA1.250*; ABKVJLA25.4*; ABKVJAB1.245$$JAC1.255*)

REPLY CODE	REPLY (AA05)
A	INCHES
L	MILLIMETERS

REPLY CODE	REPLY (AC20)
A	NOMINAL
B	MINIMUM
C	MAXIMUM

MRC	Mode Code	Name of Dimension
AASY	J	DISTANCE FROM CENTERLINE TO FLAT
ABKV	J	OUTSIDE DIAMETER
ABKW	J	OVERALL HEIGHT
ABPR	J	FIRST STEP DIAMETER
ABRC	J	FIRST HOLE DIAMETER
ABRD	J	SECOND HOLE DIAMETER
ABTB	J	MOUNTING HOLE DIAMETER
AFFL	J	MOUNTING BOLT CIRCLE DIAMETER
AGML	J	THIRD HOLE DIAMETER
AGMM	J	FOURTH HOLE DIAMETER
AGPX	J	SHOULDER OUTSIDE DIAMETER
AJEK	J	FIRST STEP HEIGHT
ASDB	J	WIDTH ACROSS FLATS
BXCZ	J	FIRST COUNTERBORE DIAMETER
BZLN	J	SECOND COUNTERBORE DIAMETER
CCFJ	J	SECOND COUNTERBORE DEPTH
CFNT	J	FIRST COUNTERBORE DEPTH
CQDL	J	FOURTH HOLE SPACING
CQDN	J	FIRST SLOT WIDTH
CQSH	J	FIRST HOLE SPACING
CQZZ	J	DISTANCE FROM OUTSIDE FLATTED PORTION TO OPPOSITE SURFACE
CRKY	J	SECOND HOLE SPACING

MRC	Mode Code	Name of Dimension
CRTB	J	THIRD HOLE SPACING
CRTT	J	SHOULDER DEPTH
CRYZ	J	FIRST SLOT DEPTH

Enter the numeric value. (e.g., ACDKB45.0*)

MRC	Mode Code	Name of Dimension
ACDK	B	FIRST ANGULAR SPACING IN DEG

NOTE: ITEMS CONFORMING TO STYLE 22 WILL BE RECORDED AS EITHER TYPE 1A, 1B, 4A, OR 4B ITEM IDENTIFICATION AS APPROPRIATE, EXCEPT WHEN A REFERENCE NUMBER WITH RNCC 1 IS TO BE RECORDED AGAINST THE ITEM, IN WHICH CASE THE TYPE OF ITEM IDENTIFICATION WILL BE CHANGED TO 1 OR 4 AS APPROPRIATE.

REFERENCE DRAWING GROUP E

INSULATOR, DISK

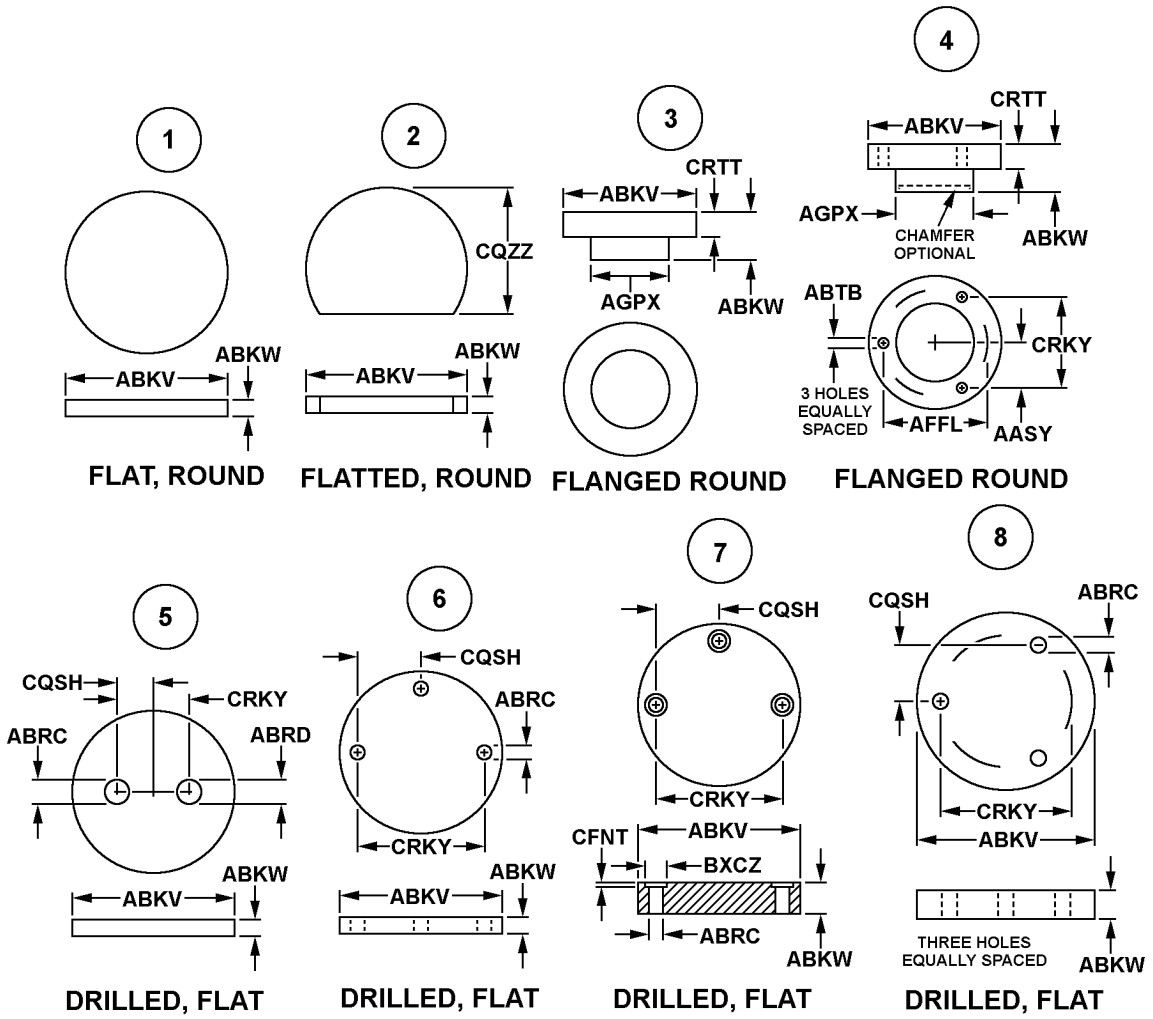

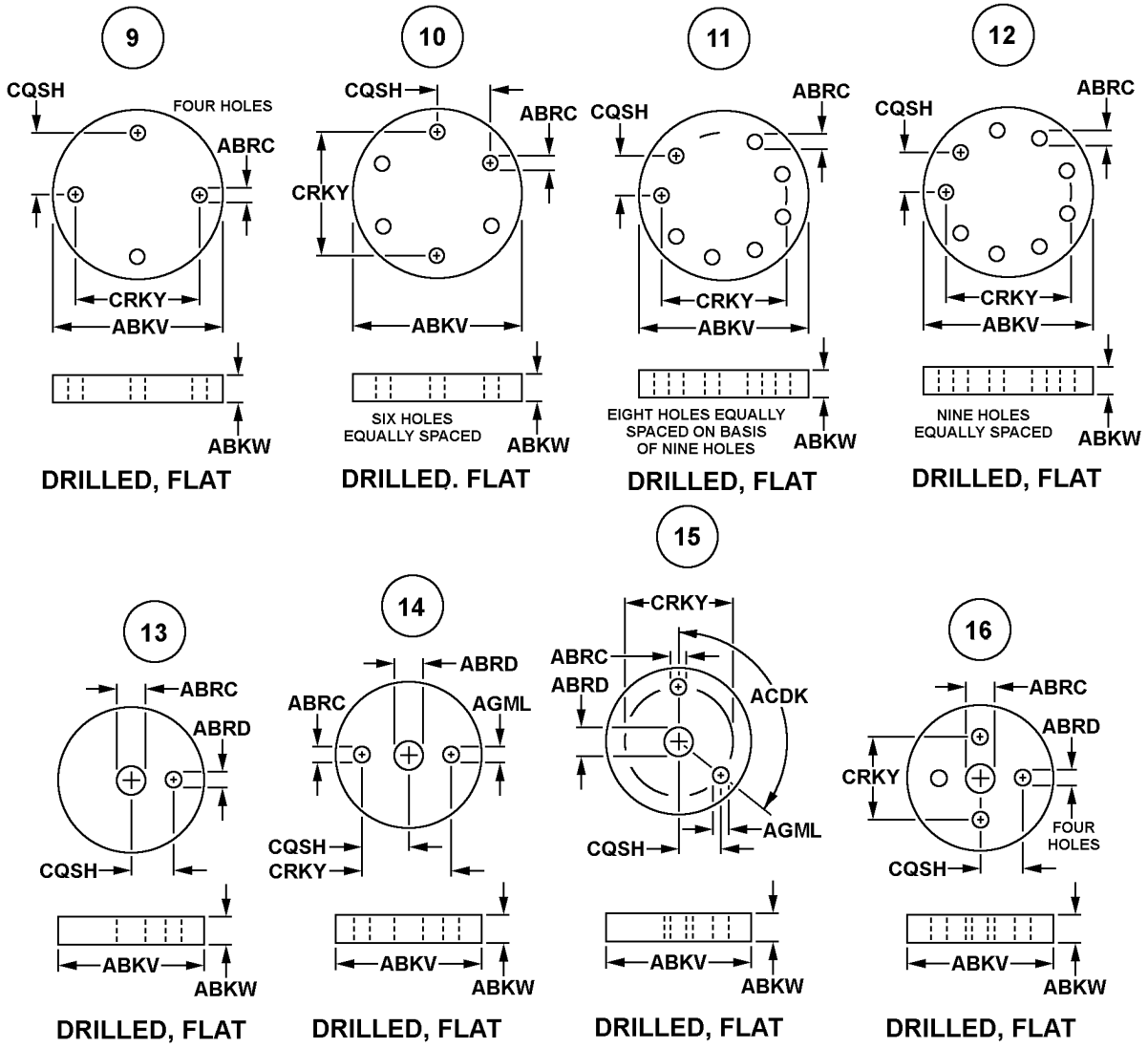
9
CQSH
FOUR HOLES
ABRC
CRKY
ABKV
ABKW
DRILLED, FLAT
10
CQSH
ABRC
CRKY
ABKV
SIX HOLES
EQUALLY SPACED
ABKW
DRILLED. FLAT
11
CQSH
ABRC
CRKY
ABKV
EIGHT HOLES EQUALLY
SPACED ON BASIS
OF NINE HOLES
ABKW
DRILLED, FLAT
12
CQSH
ABRC
CRKY
ABKV
NINE HOLES
EQUALLY SPACED
ABKW
DRILLED, FLAT
13
ABRC
ABRD
CQSH
ABKV
ABKW
DRILLED, FLAT
14
ABRD
ABRC
AGML
CQSH
CRKY
ABKV
ABKW
DRILLED, FLAT
15
CRKY
ABRC
ABRD
ACDK
AGML
CQSH
ABKV
ABKW
DRILLED, FLAT
16
ABRC
ABRD
CRKY
FOUR
HOLES
CQSH
ABKV
ABKW
DRILLED, FLAT

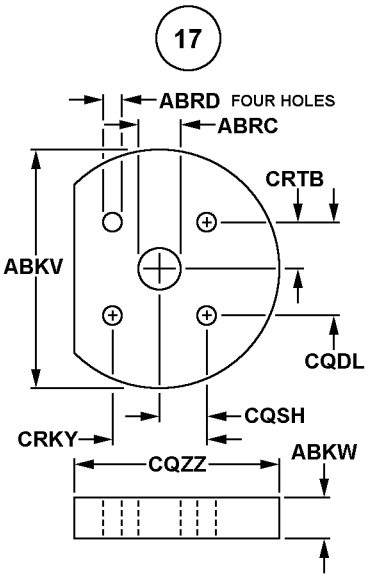

DRILLED, FLATTED

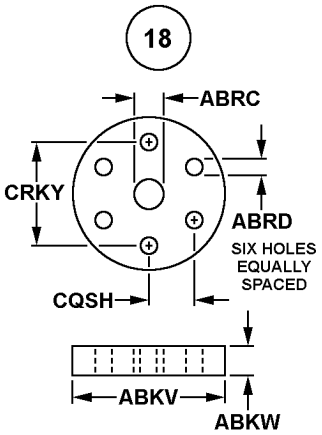

DRILLED, FLAT

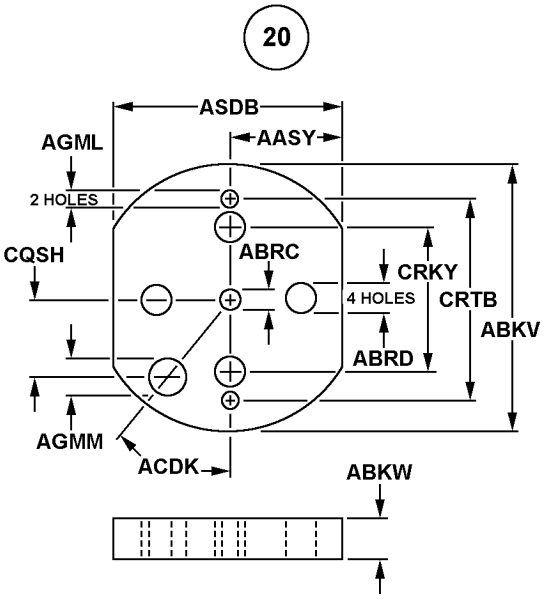

DRILLED, FLATTED

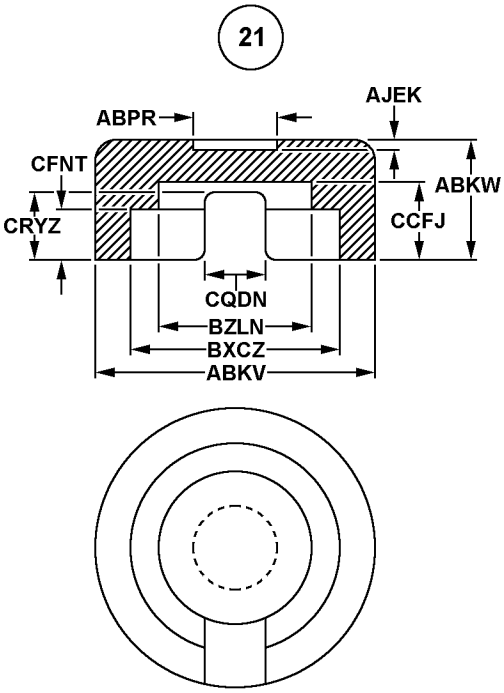

ROUND, SLOTTED

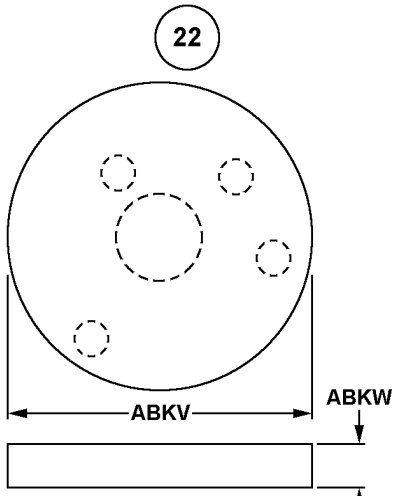

NOTE: STYLE 22 IS TO BE USED FOR ITEMS HAVING HOLES OF ONE OR MORE DIAMETER(S) AND THE HOLE SPACING CANNOT BE SPECIFIED WITH LOGICAL CONSISTENCY. DO NOT USE IF A MORE REPRESENTATIVE DRAWING IS AVAILABLE.

FLAT, ROUND

REFERENCE DRAWING GROUP F Tables
INSULATOR, FEEDTHRU

INDEX OF MASTER REQUIREMENT CODES

Enter the applicable Reply Codes from the Tables 1 and 2 below, followed by the numeric value. (e.g., ABKVJAA1.250*; ABKVJLA25.4*; ABKVJAB1.245$$JAC1.255*)

REPLY CODE	REPLY (AA05)
A	INCHES
L	MILLIMETERS

REPLY CODE	REPLY (AC20)
A	NOMINAL
B	MINIMUM
C	MAXIMUM

MRC	Mode Code	Name of Dimension
ABKH	J	BUSHING DIAMETER
ABKU	J	FLANGE THICKNESS
ABKV	J	OUTSIDE DIAMETER
ABTB	J	MOUNTING HOLE DIAMETER
AFFL	J	MOUNTING BOLT CIRCLE DIAMETER
AGEU	J	BASE DIAMETER
AGGZ	J	SHANK OUTSIDE DIAMETER
AGPX	J	SHOULDER OUTSIDE DIAMETER
AJQL	J	TOP DIAMETER
AJQM	J	BOWL DIAMETER
AQZQ	J	SHANK HEIGHT
AYGJ	J	HEIGHT ABOVE MOUNTING SURFACE
BXCZ	J	FIRST COUNTERBORE DIAMETER
CFNT	J	FIRST COUNTERBORE DEPTH
CQBR	J	FIRST RELIEF SLOT LENGTH
CQCG	J	DISTANCE FROM CENTERLINE OF HOLE TO STUD END
CQLF	J	GASKET THICKNESS
CQSF	J	CENTER STUD LENGTH
CRDH	J	FIRST RELIEF SLOT DEPTH
CRJK	J	CENTER STUD HOLE DIAMETER
CRLF	J	FIRST RELIEF SLOT WIDTH
CRTT	J	SHOULDER DEPTH

REFERENCE DRAWING GROUP F

INSULATOR, FEEDTHRU

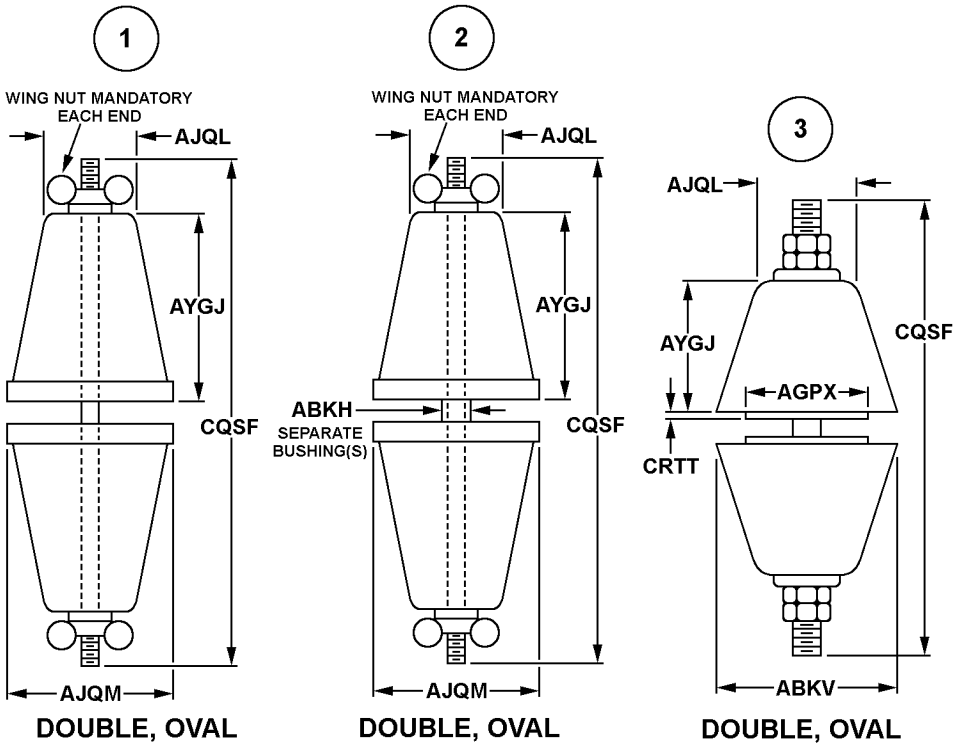

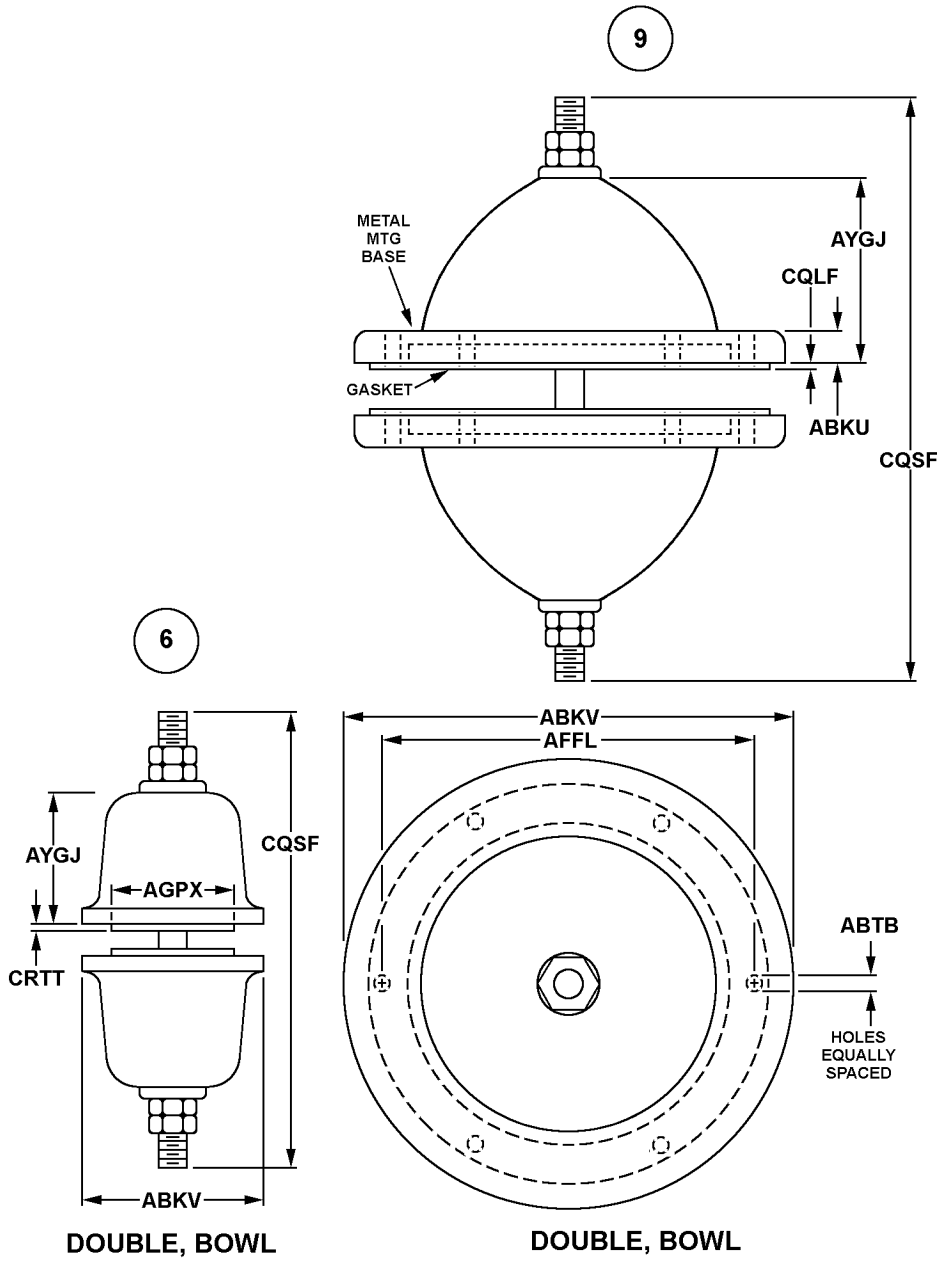
9
METAL
MTG
BASE
AYGJ
CQLF
GASKET
ABKU
CQSF
6
AYGJ
CQSF
AGPX
CRTT
ABKV
ABKV
AFFL
ABTB
HOLES
EQUALLY
SPACED
DOUBLE, BOWL
DOUBLE, BOWL

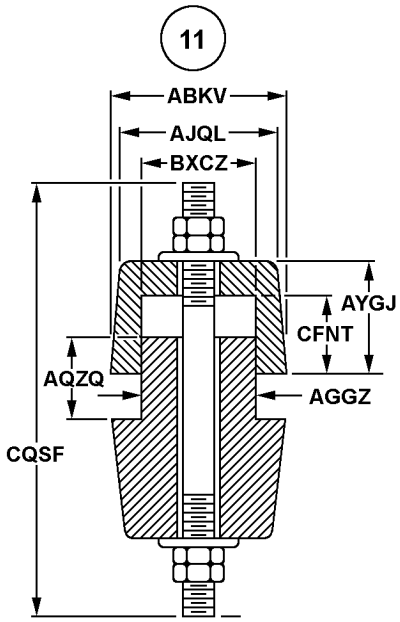

BUSHING

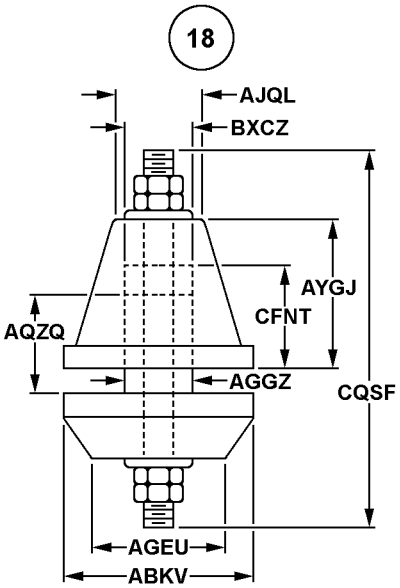

DOUBLE, BOWL

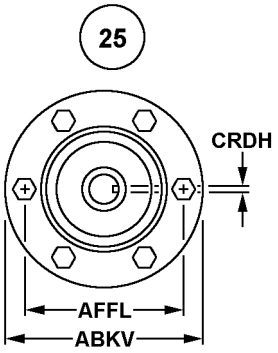

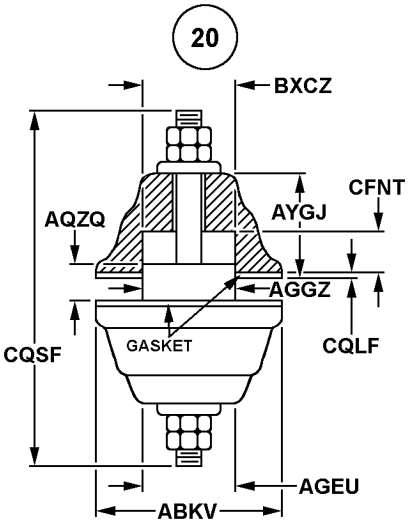

BUSHING

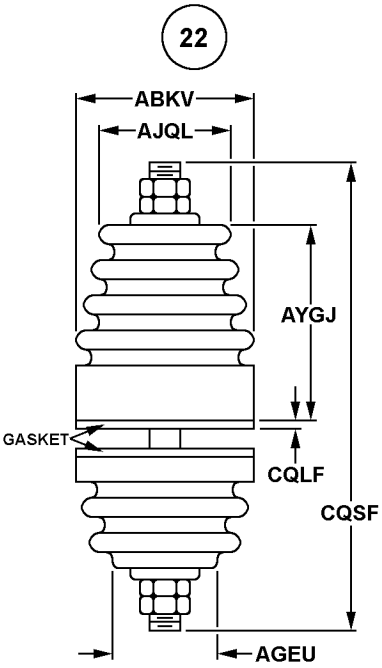

CORRUGATED

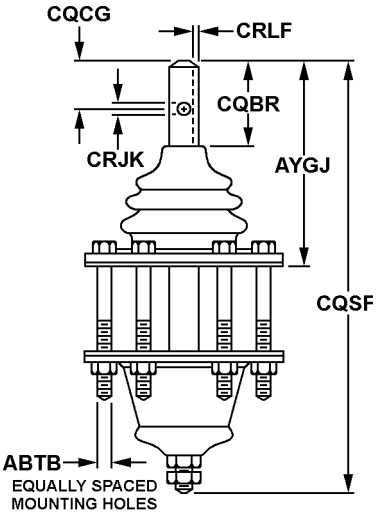

CONICAL, CORRUGATED

REFERENCE DRAWING GROUP G Tables
INSULATOR, KNOB

INDEX OF MASTER REQUIREMENT CODES

Enter the applicable Reply Codes from the Tables 1 and 2 below, followed by the numeric value. (e.g., ABKVJAA1.250*; ABKVJLA25.4*; ABKVJAB1.245$$JAC1.255*)

REPLY CODE	REPLY (AA05)
A	INCHES
L	MILLIMETERS

REPLY CODE	REPLY (AC20)
A	NOMINAL
B	MINIMUM
C	MAXIMUM

MRC	Mode Code	Name of Dimension
ABKV	J	OUTSIDE DIAMETER
ABTB	J	MOUNTING HOLE DIAMETER
ALHL	J	SIDE LENGTH
CQBX	J	SECOND DISTANCE FROM CONDUCTOR SLOT TO OPPOSITE SURFACE
CQDN	J	FIRST SLOT WIDTH
CRQT	J	DISTANCE BETWEEN CONDUCTOR GROOVE AND MOUNTING HOLE
CRWN	J	FIRST DISTANCE FROM CONDUCTOR SLOT TO OPPOSITE SURFACE
CRYZ	J	FIRST SLOT DEPTH

REFERENCE DRAWING GROUP G

INSULATOR, KNOB

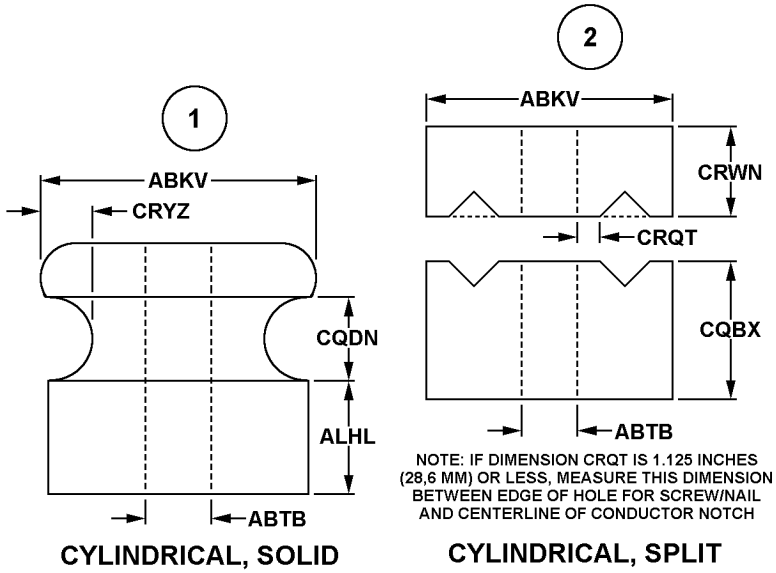

REFERENCE DRAWING GROUP H Tables
INSULATOR, PIN

INDEX OF MASTER REQUIREMENT CODES

Enter the applicable Reply Codes from the Tables 1 and 2 below, followed by the numeric value. (e.g., ABKVJAA1.250*; ABKVJLA25.4*; ABKVJAB1.245$$JAC1.255*)

REPLY CODE	REPLY (AA05)
A	INCHES
L	MILLIMETERS

REPLY CODE	REPLY (AC20)
A	NOMINAL
B	MINIMUM
C	MAXIMUM

MRC	Mode Code	Name of Dimension
ABKV	J	OUTSIDE DIAMETER
ABKW	J	OVERALL HEIGHT
ACXU	J	PINHOLE DIAMETER
ANTS	J	RADIAL GROOVE RADIUS
CQBT	J	PIN HOLE DEPTH
CQDG	J	SKIRT LENGTH
CQLL	J	SECOND DISTANCE BETWEEN CONDUCTOR GROOVES
CRFW	J	FIRST RADIAL GROOVE WIDTH
CRLT	J	CONDUCTOR SEPARATION DISTANCE
CRWC	J	TOP WIRE GROOVE RADIUS
CSBB	J	RADIAL GROOVE DIAMETER
CSCM	J	SECOND RADIAL GROOVE WIDTH

REFERENCE DRAWING GROUP H

INSULATOR, PIN

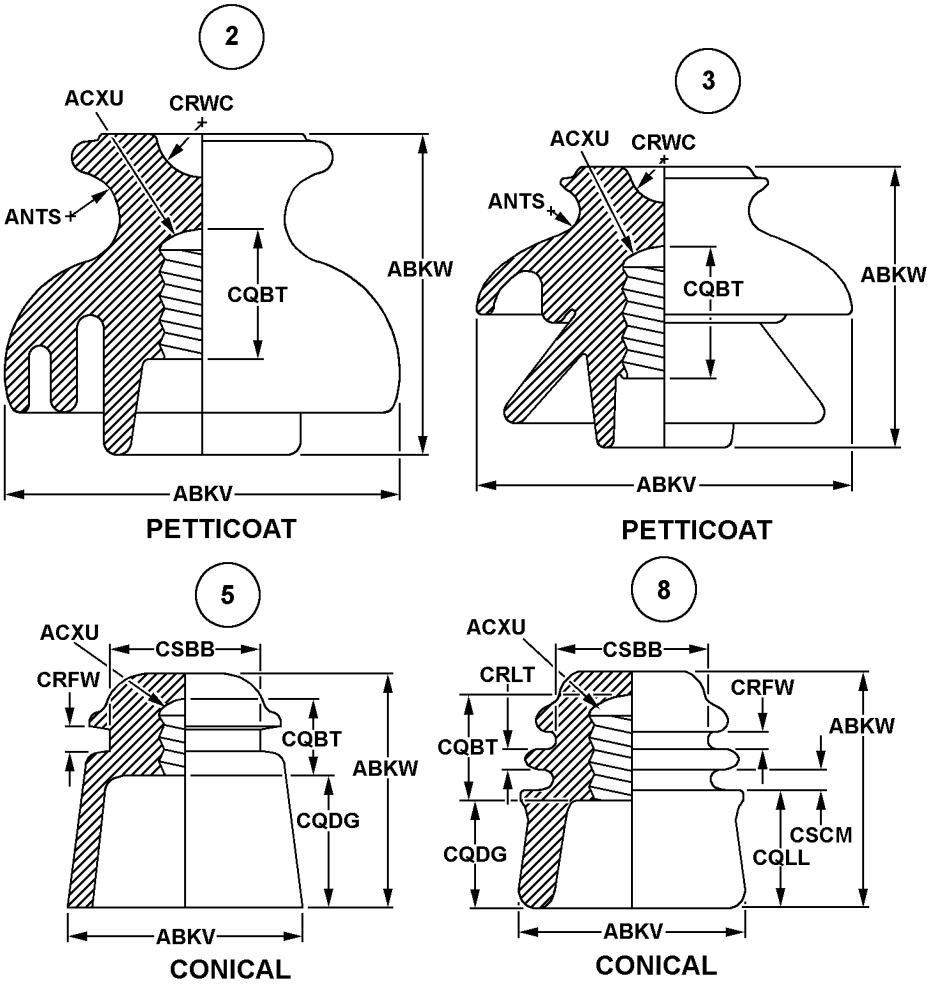

REFERENCE DRAWING GROUP J Tables
INSULATOR, PINCAP

INDEX OF MASTER REQUIREMENT CODES

Enter the applicable Reply Codes from the Tables 1 and 2 below, followed by the numeric value. (e.g., ABKVJAA1.250*; ABKVJLA25.4*; ABKVJAB1.245$$JAC1.255*)

REPLY CODE	REPLY (AA05)
A	INCHES
L	MILLIMETERS

REPLY CODE	REPLY (AC20)
A	NOMINAL
B	MINIMUM
C	MAXIMUM

MRC	Mode Code	Name of Dimension
ABKV	J	OUTSIDE DIAMETER
ABKW	J	OVERALL HEIGHT
ABTB	J	MOUNTING HOLE DIAMETER
AFFL	J	MOUNTING BOLT CIRCLE DIAMETER
AGEU	J	BASE DIAMETER
AJQL	J	TOP DIAMETER
CRFB	J	CENTER TO CENTER DISTANCE BETWEEN DOME HOLES

REFERENCE DRAWING GROUP J

INSULATOR, PINCAP

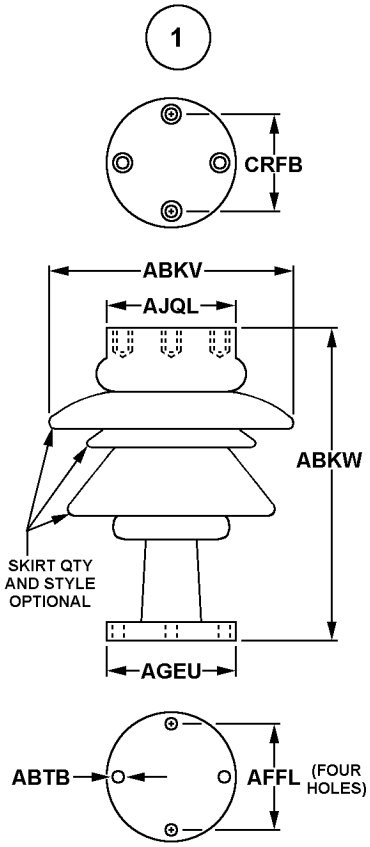

MUSHROOM

REFERENCE DRAWING GROUP K Tables
INSULATOR, PLATE; INSULATOR, SPACER

INDEX OF MASTER REQUIREMENT CODES

Enter the applicable Reply Codes from Tables 1 and 2 below, followed by the numeric value. (e.g., ABHPJAA1.250*; ABHPJLA25.4*; ABHPJAB1.245$$JAC1.255*)

REPLY CODE	REPLY (AA05)
A	INCHES
L	MILLIMETERS

REPLY CODE	REPLY (AC20)
A	NOMINAL
B	MINIMUM
C	MAXIMUM

MRC	Mode Code	Name of Dimension
ABHP	J	OVERALL LENGTH
ABKW	J	OVERALL HEIGHT
ABMK	J	OVERALL WIDTH
ABPS	J	FIRST STEP LENGTH
ABPU	J	SECOND STEP LENGTH
ABQR	J	COUNTERSINK MAJOR DIAMETER
ABRC	J	FIRST HOLE DIAMETER
ABRD	J	SECOND HOLE DIAMETER
ADUW	J	CENTER HOLE LENGTH
ADUX	J	CENTER HOLE WIDTH
AGHG	J	CHAMFER DEPTH
AGML	J	THIRD HOLE DIAMETER
AGMM	J	FOURTH HOLE DIAMETER
AHHG	J	DISTANCE BETWEEN LEGS
AHLF	J	SECOND LEG WIDTH
AHQN	J	FIRST LEG WIDTH
AHSJ	J	LEG LENGTH
AJEK	J	FIRST STEP HEIGHT
AJHV	J	FIRST CORNER RADIUS
ALHL	J	SIDE LENGTH
BXCZ	J	FIRST COUNTERBORE DIAMETER
CFNT	J	FIRST COUNTERBORE DEPTH

MRC	Mode Code	Name of Dimension
CQBH	J	FIRST END RADIUS
CQBW	J	SEVENTH HOLE SPACING
CQBZ	J	SECOND SLOT DEPTH
CQDH	J	SECOND SIDE RADIUS
CQDL	J	FOURTH HOLE SPACING
CQDN	J	FIRST SLOT WIDTH
CQFP	J	TENTH HOLE SPACING
CQGL	J	FIRST HOLE LENGTH
CQHX	J	FIRST CENTER DISTANCE
CQLM	J	SECOND END RADIUS
CQSH	J	FIRST HOLE SPACING
CQWC	J	SECOND STEP HEIGHT
CRKC	J	CORNER CUT LENGTH
CRKH	J	THIRD STEP HEIGHT
CRKY	J	SECOND HOLE SPACING
CRPR	J	SECOND CENTER DISTANCE
CRRS	J	SECOND HOLE WIDTH
CRTB	J	THIRD HOLE SPACING
CRTH	J	EIGHTH HOLE SPACING
CRTT	J	SHOULDER DEPTH
CRWK	J	FIRST SIDE RADIUS
CRYN	J	FIFTH HOLE SPACING
CRYZ	J	FIRST SLOT DEPTH
CSBM	J	SECOND HOLE LENGTH
CSBN	J	CORNER CUT WIDTH
CSCT	J	FIRST HOLE WIDTH
CSDB	J	SECOND SLOT WIDTH
CSDD	J	SIXTH HOLE SPACING
CSDM	J	NINTH HOLE SPACING

Enter the numeric value. (e.g., AATEB45.0*)

MRC	Mode Code	Name of Dimension
AATA	B	COUNTERSINK ANGLE IN DEG
AATE	B	CHAMFER ANGLE IN DEG
ACDK	B	FIRST ANGULAR SPACING IN DEG
ACDL	B	SECOND ANGULAR SPACING IN DEG
ACDM	B	THIRD ANGULAR SPACING IN DEG
ACEV	B	PLATE ANGLE IN DEG

NOTE: Style 1 is to be used for items having holes of one or more diameter(s) and/or the hole spacing cannot be specified with logical consistency. Do not use if a more representative drawing is available. Items conforming to this style will be recorded as either type 1a, 1b, 4a, or 4b item identification as appropriate, except when a reference number with RNCC 1 is to be recorded against the item, in which case the type of item identification will be changed to 1 or 4 as appropriate.

Items conforming to styles 95, 96, 97, 98, 99, 100 and 101 will be recorded as either 1a, 1b, 4a, or 4b item identification as appropriate, except when a reference number with RNCC 1 is to be recorded against the item, in which case the type of item identification will be changed to 1 or 4 as appropriate. These styles will be used for items having holes of one or more diameter(s) and the hole spacing cannot be specified with logical consistency. Do not use if a more representative drawing is available.

REFERENCE DRAWING GROUP K

INSULATOR, PLATE; INSULATOR, SPACER

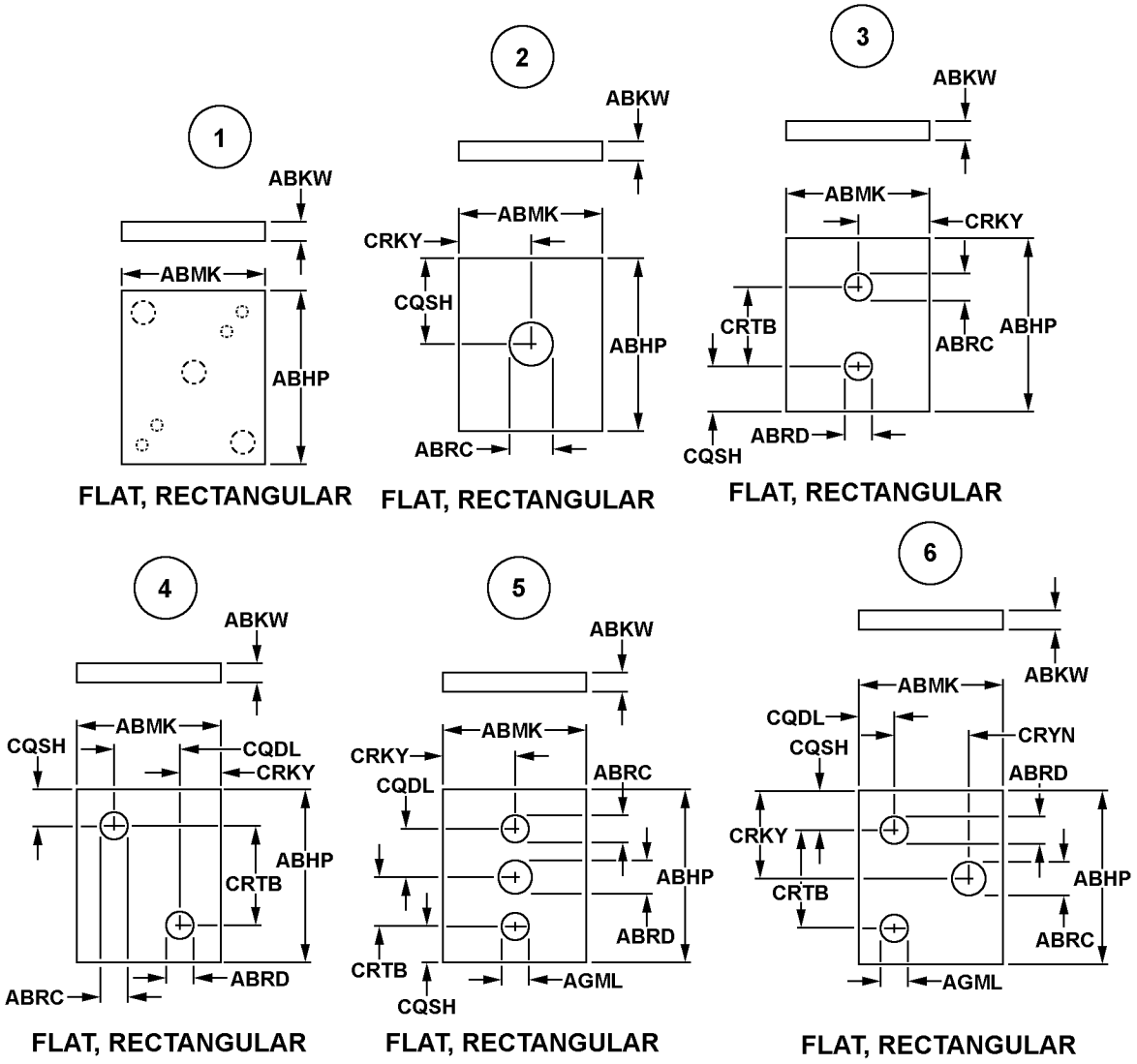

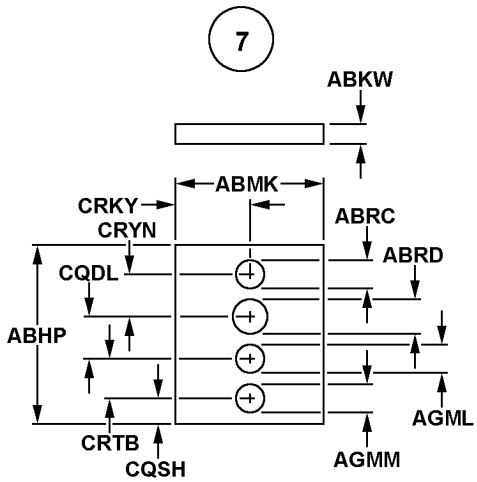

FLAT, RECTANGULAR

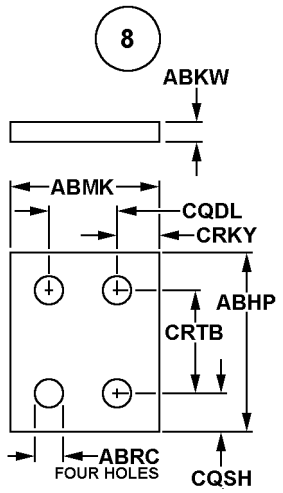

FLAT, RECTANGULAR

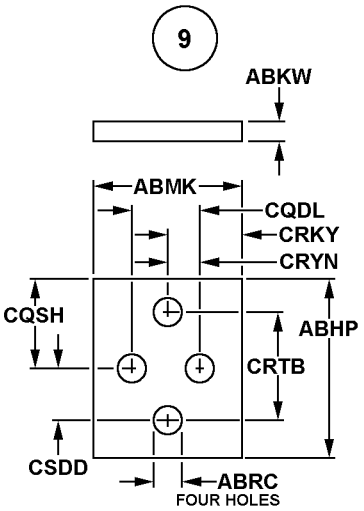

FLAT, RECTANGULAR

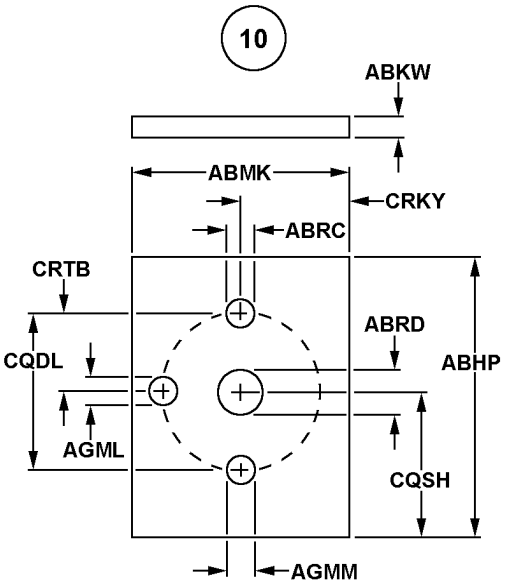

FLAT, RECTANGULAR

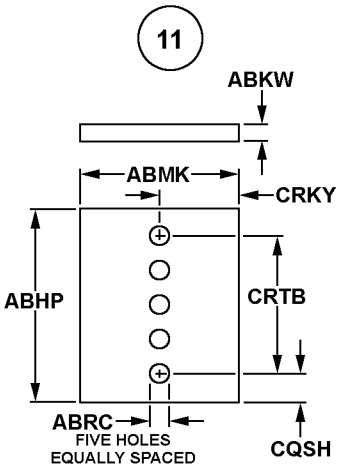

FLAT, RECTANGULAR

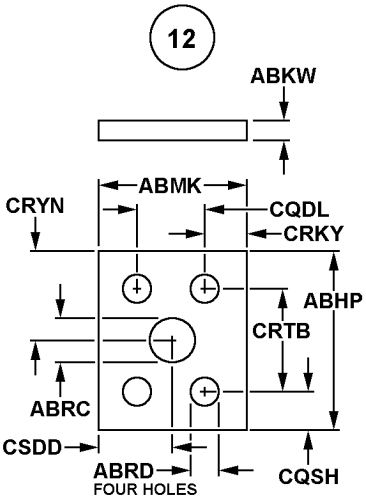

DRILLED, FLAT

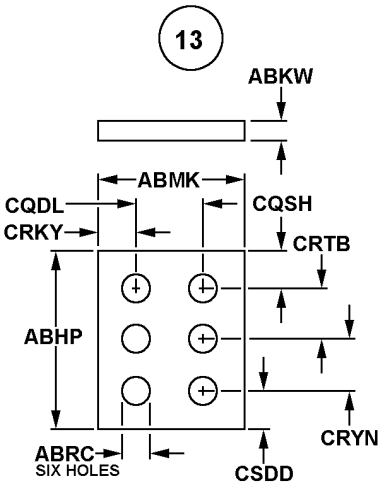

FLAT, RECTANGULAR

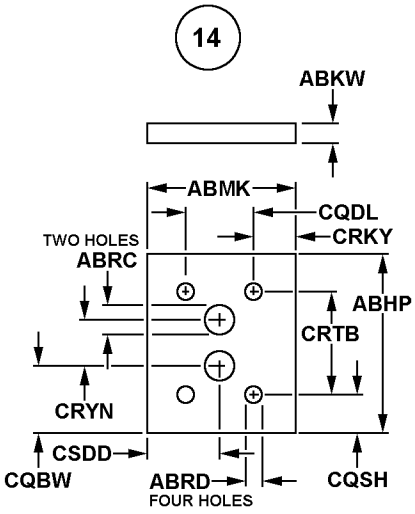

FLAT, RECTANGULAR

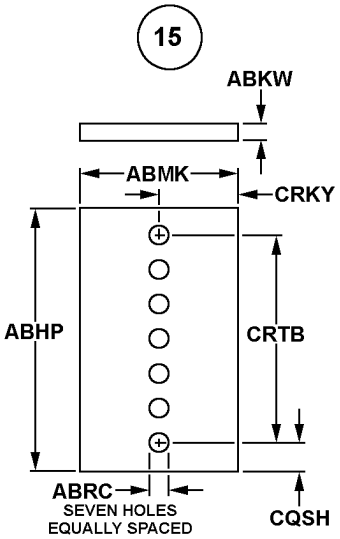

FLAT, RECTANGULAR

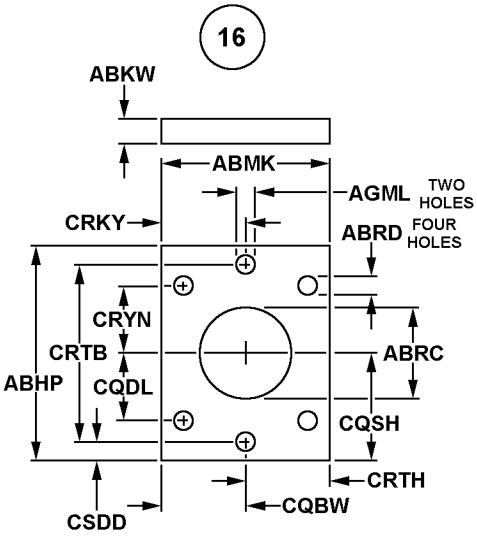

FLAT, RECTANGULAR

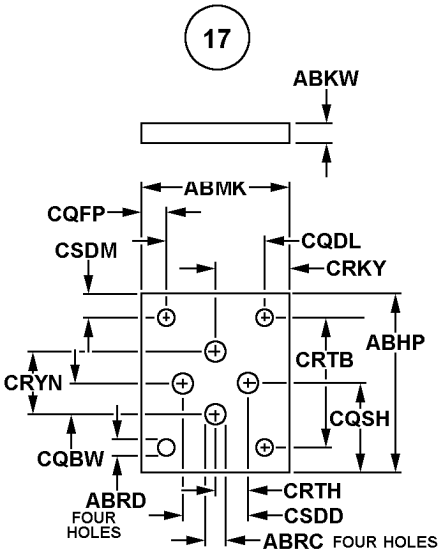

FLAT, RECTANGULAR

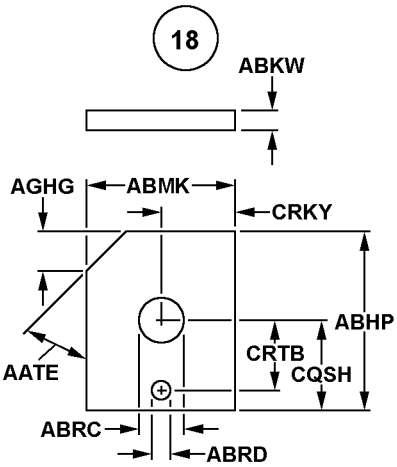

FLAT, IRREGULAR

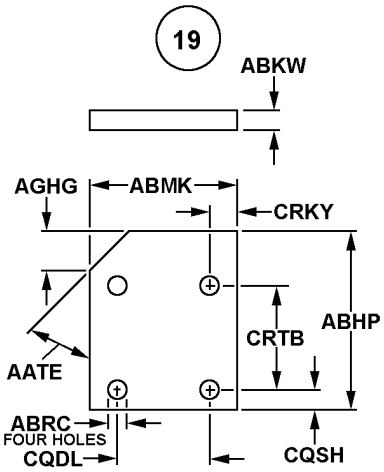

FLAT, IRREGULAR

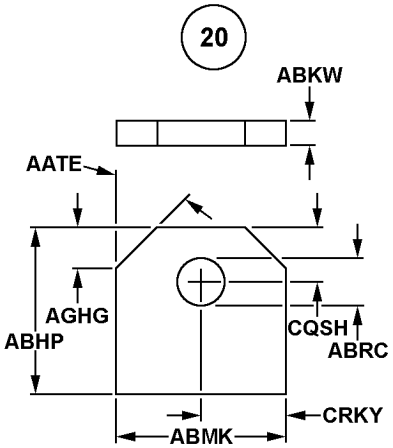

FLAT, IRREGULAR

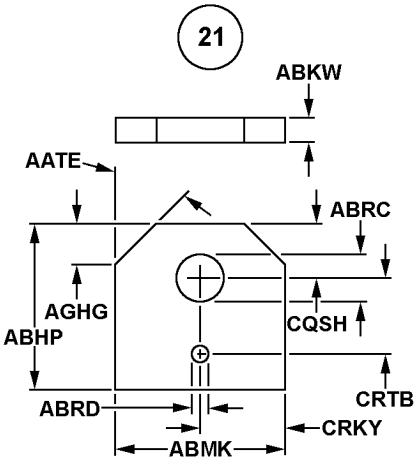

FLAT, IRREGULAR

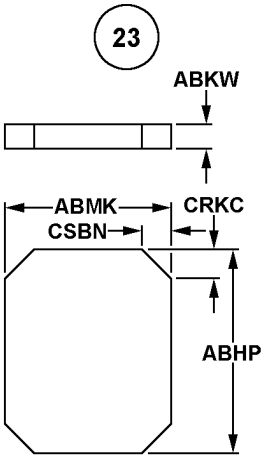

FLAT, IRREGULAR

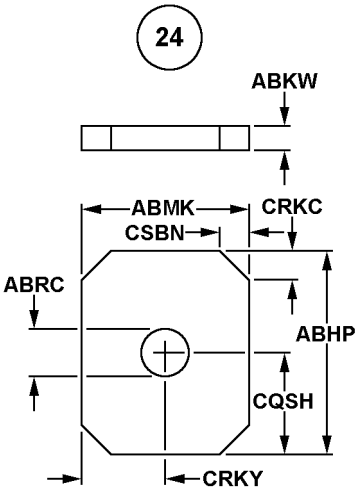

FLAT, IRREGULAR

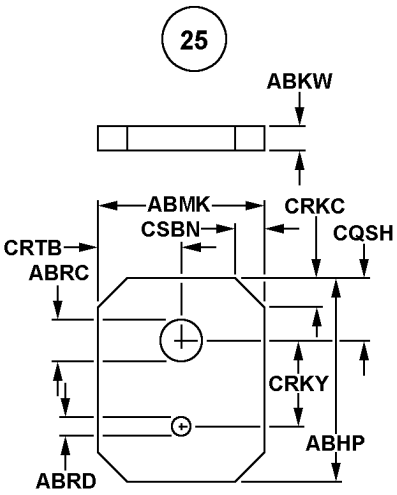

FLAT, IRREGULAR

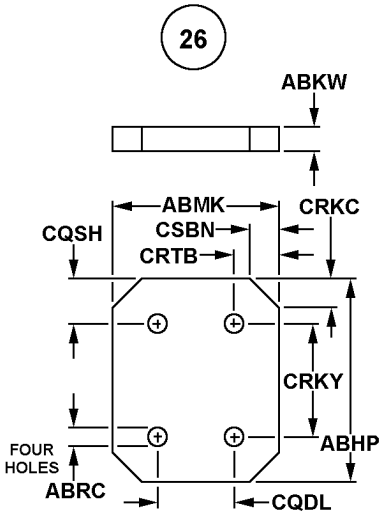

FLAT, IRREGULAR

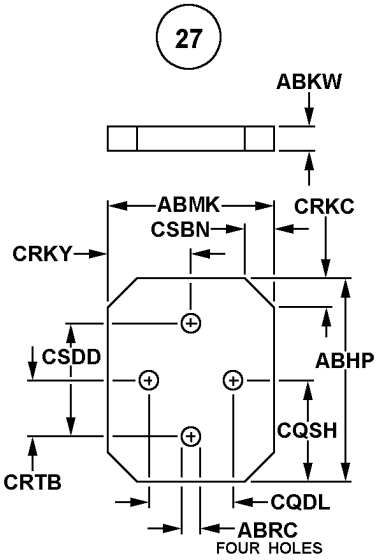

FLAT, IRREGULAR

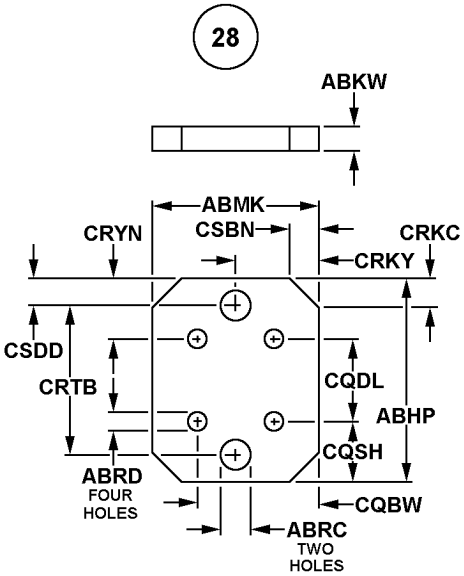

FLAT, IRREGULAR

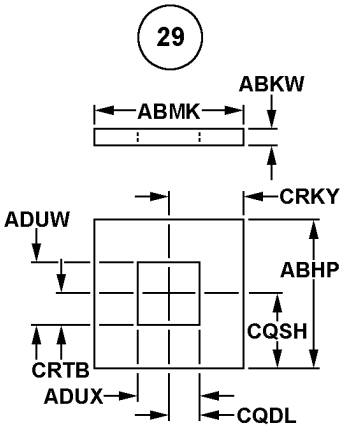

FLAT, SQUARE

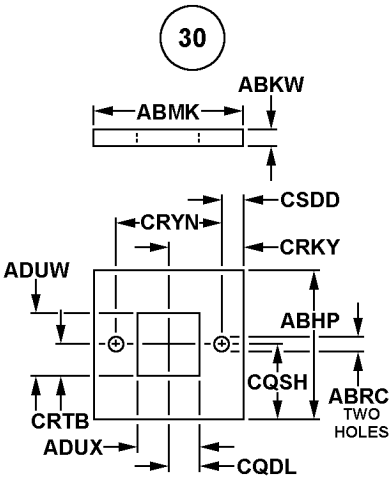

FLAT, SQUARE

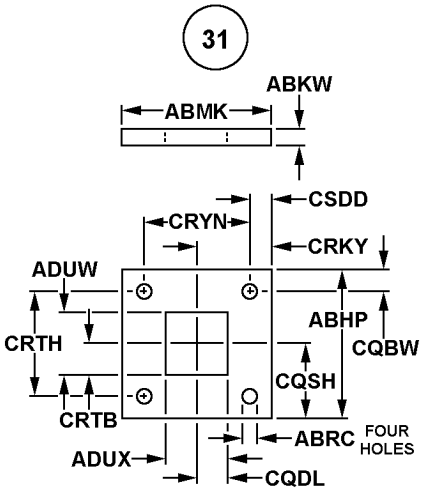

FLAT, SQUARE

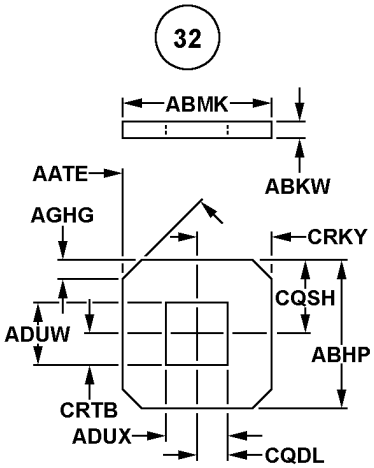

FLAT, IRREGLAR

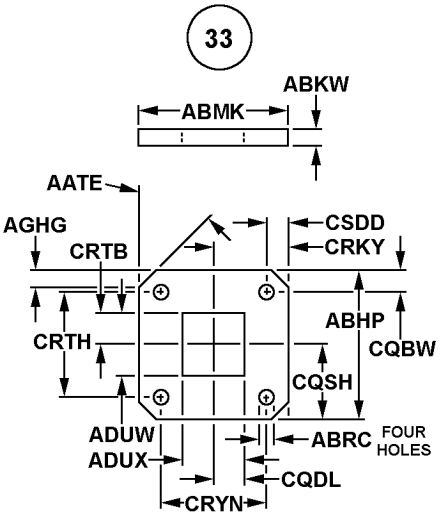

FLAT, IRREGULAR

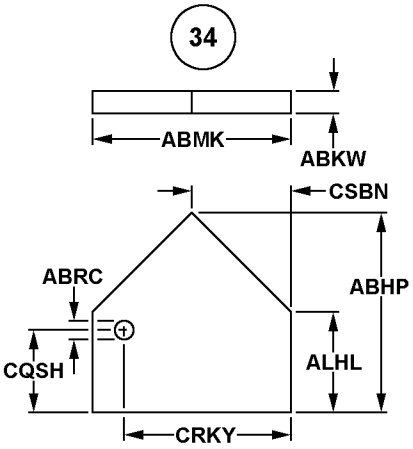

FLAT, POLYGON

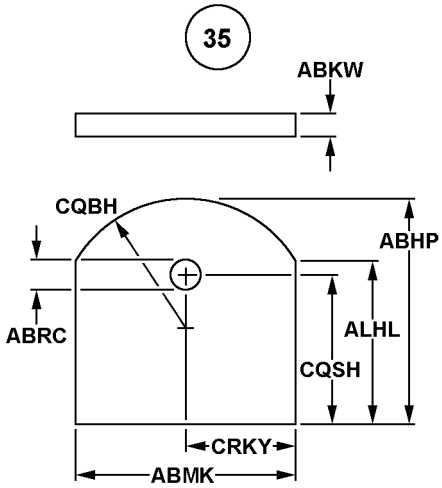

FLAT, IRREGULAR

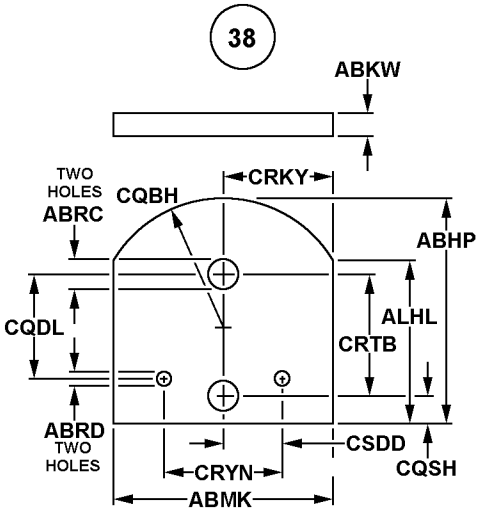

FLAT, IRREGULAR

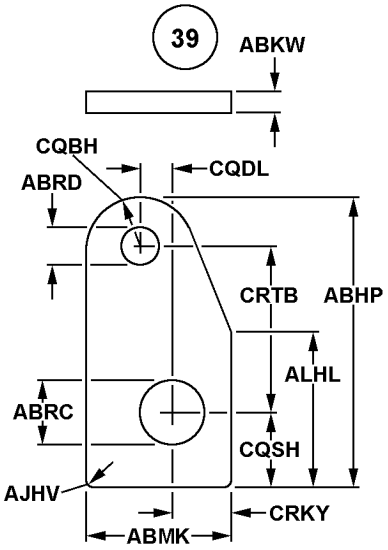

FLAT, IRREGULAR

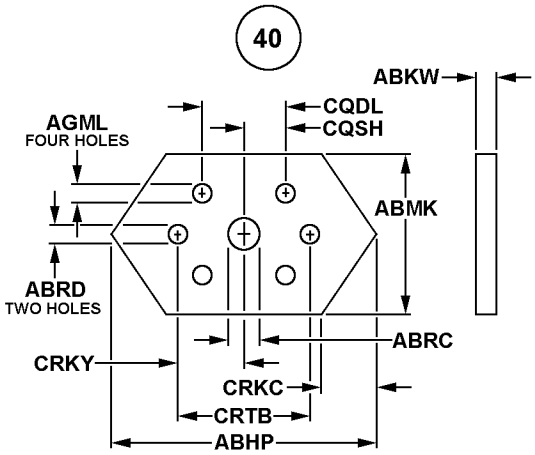

FLAT, HEXAGONAL

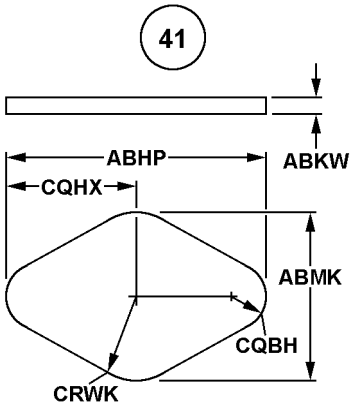

FLAT, DIAMOND

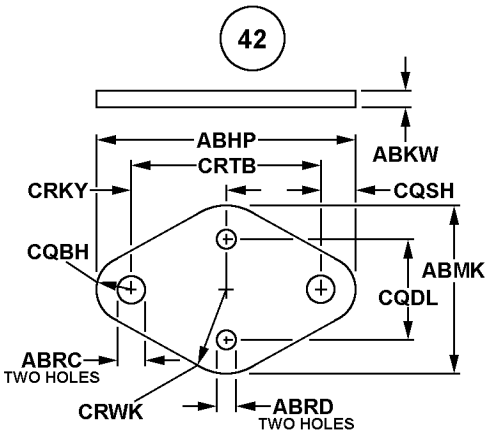

FLAT, DIAMOND

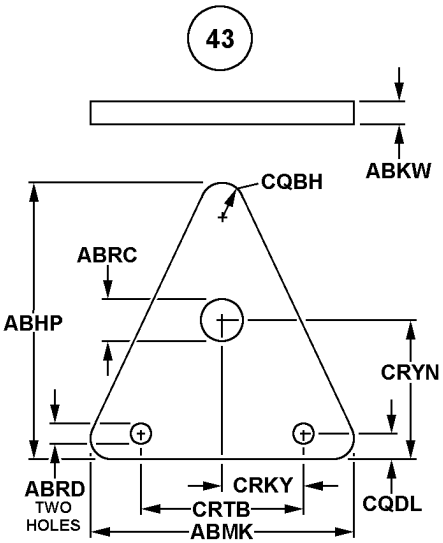

FLAT, TRIANGULAR

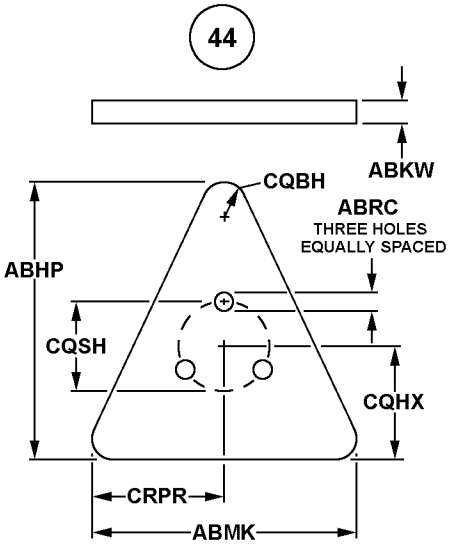

FLAT, TRIANGULAR

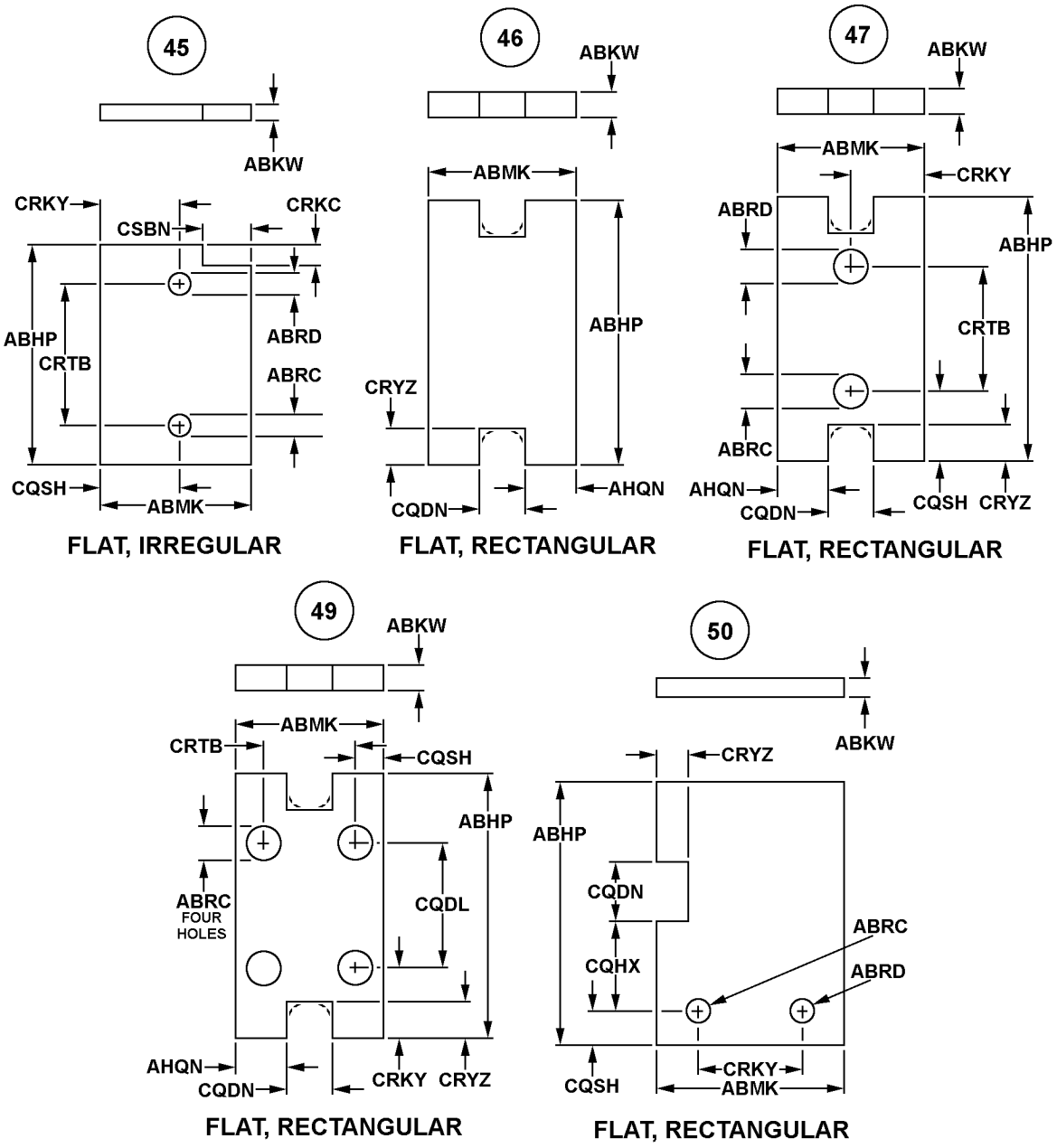
45
ABKW
CRKY
CSBN
CRKC
ABHP
CRTB
ABRD
ABRC
CQSH
ABMK
FLAT, IRREGULAR
46
ABKW
ABMK
ABHP
CRYZ
CQDN
AHQN
FLAT, RECTANGULAR
47
ABKW
ABMK
CRKY
ABRD
ABHP
CRTB
ABRC
AHQN
CQDN
CQSH
CRYZ
FLAT, RECTANGULAR
49
ABKW
ABMK
CRTB
CQSH
ABHP
ABRC
FOUR
HOLES
CQDL
AHQN
CQDN
CRKY
CRYZ
FLAT, RECTANGULAR
50
ABKW
CRYZ
ABHP
CQDN
ABRC
CQHX
ABRD
CQSH
CRKY
ABMK
FLAT, RECTANGULAR

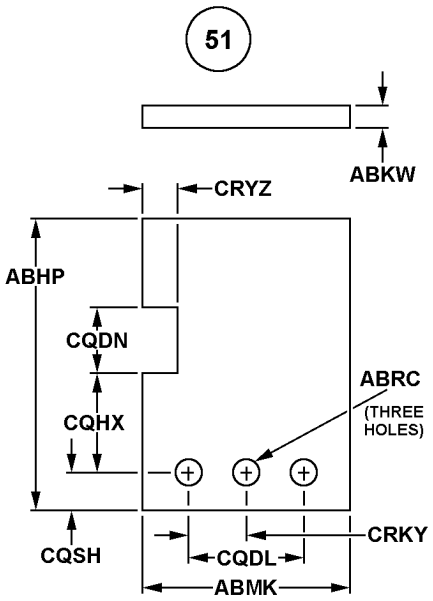

FLAT, RECTANGULAR

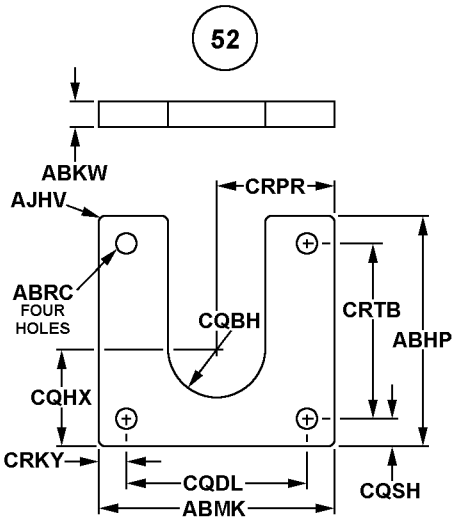

FLAT, "U" SHAPED

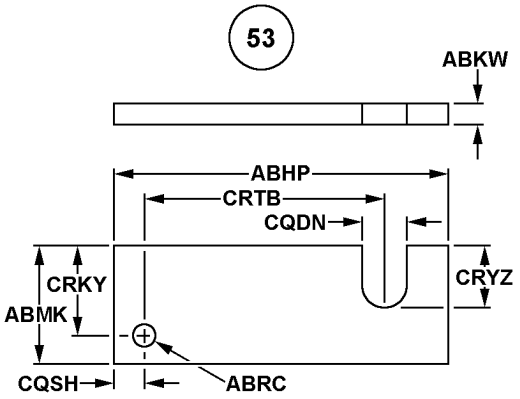

FLAT, RECTANGULAR

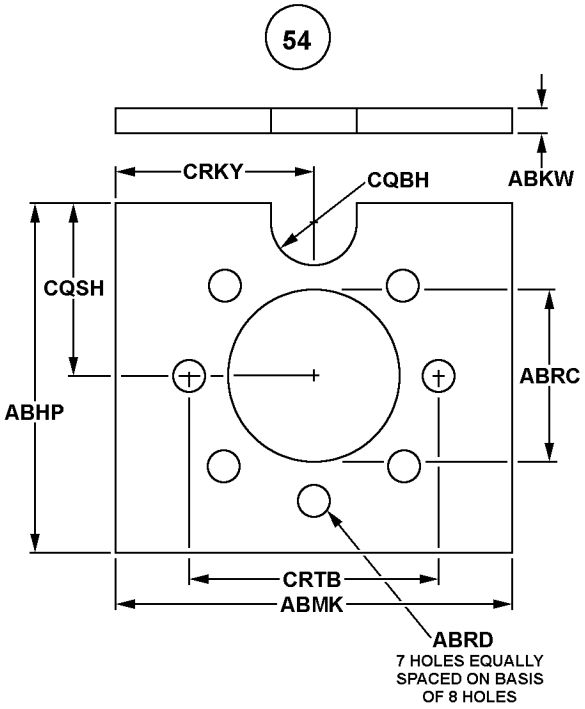

FLAT, SQUARE

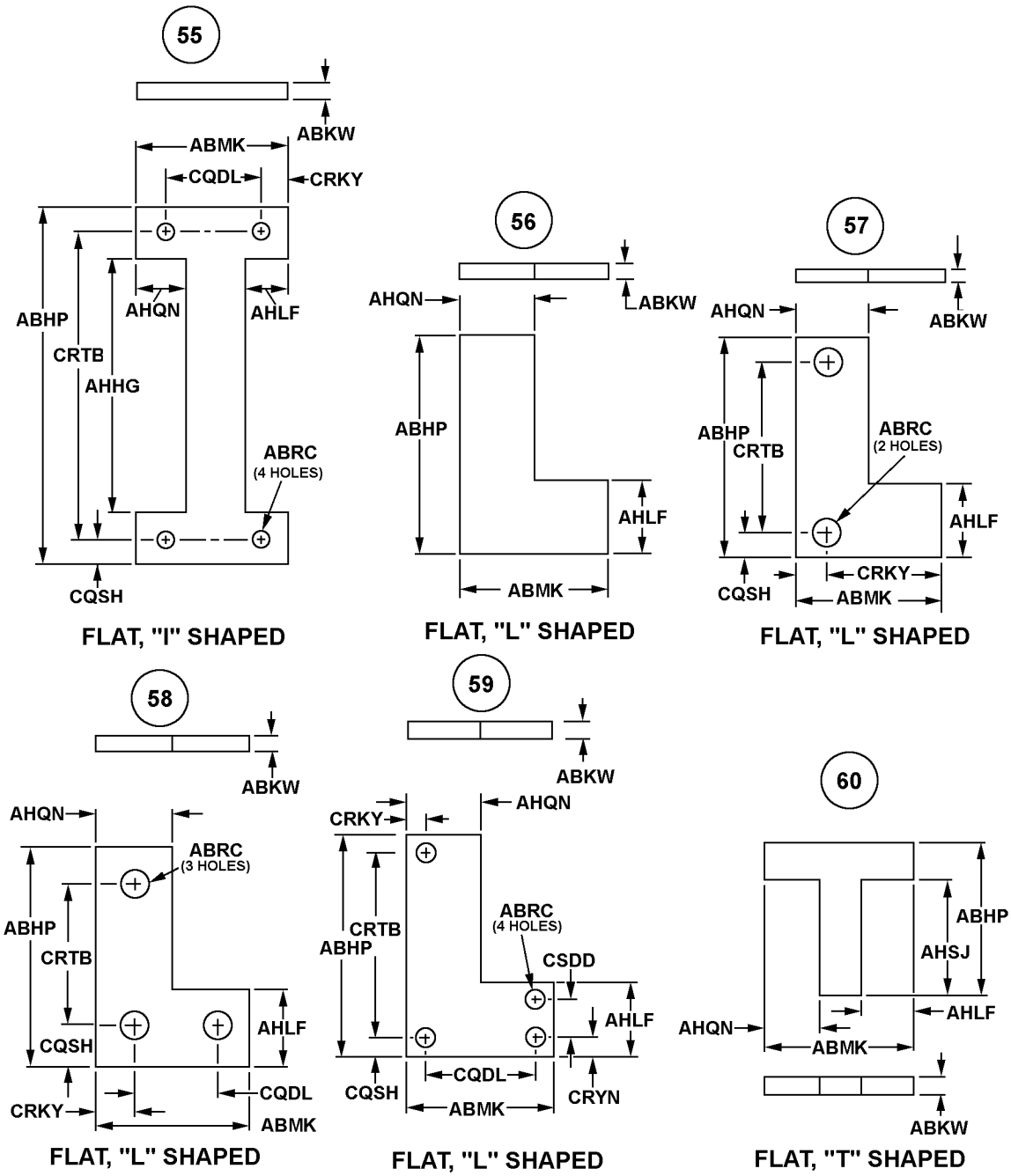
55
ABKW
ABMK
CQDL
CRKY
ABHP
AHQN
AHLF
CRTB
AHHG
ABRC
(4 HOLES)
CQSH
FLAT, "I" SHAPED
56
AHQN
ABKW
ABHP
AHLF
ABMK
FLAT, "L" SHAPED
57
AHQN
ABKW
ABHP
CRTB
ABRC
(2 HOLES)
AHLF
CRKY
CQSH
ABMK
FLAT, "L" SHAPED
58
ABKW
AHQN
ABRC
(3 HOLES)
ABHP
CRTB
AHLF
CQSH
CQDL
CRKY
ABMK
FLAT, "L" SHAPED
59
ABKW
CRKY
AHQN
CRTB
ABHP
ABRC
(4 HOLES)
CSDD
AHLF
CQDL
CQSH
ABMK
CRYN
FLAT, "L" SHAPED
60
ABHP
AHSJ
AHLF
AHQN
ABMK
ABKW
FLAT, "T" SHAPED

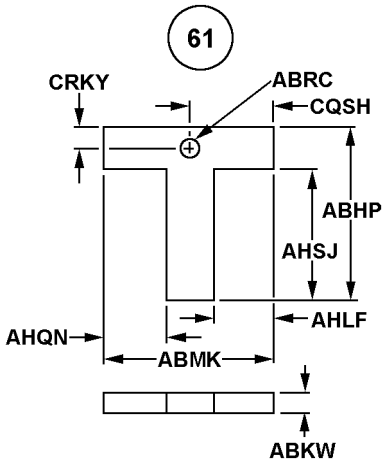

FLAT, "T" SHAPED

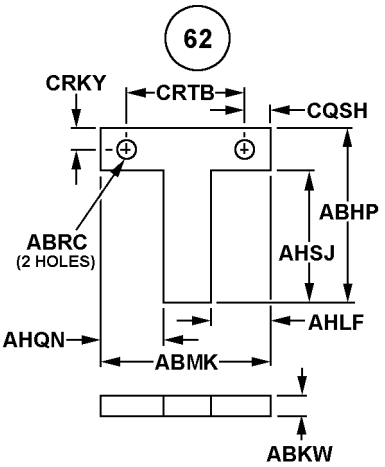

FLAT, "T" SHAPED

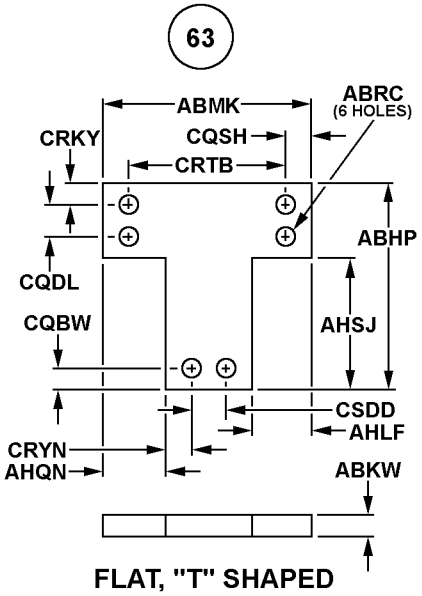

FLAT, "T" SHAPED

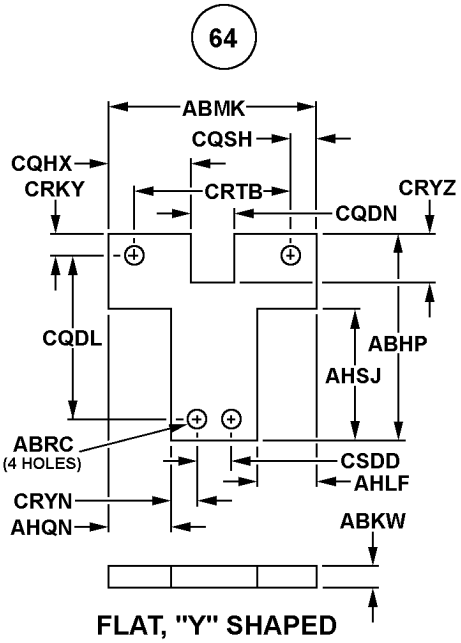

FLAT, "Y" SHAPED

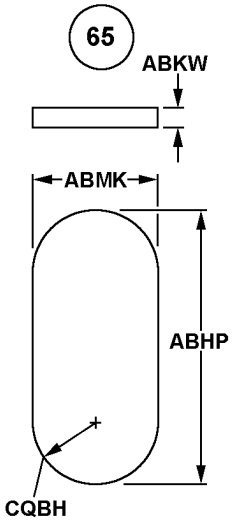

RECTANGULAR, ROUNDED ENDS

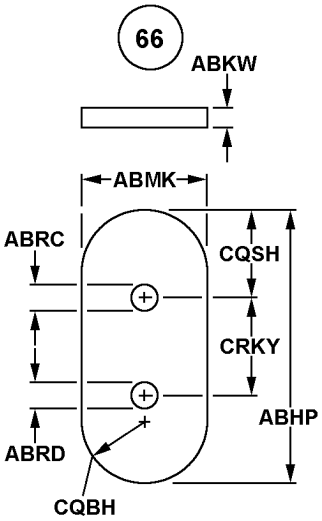

RECTANGULAR, ROUNDED ENDS

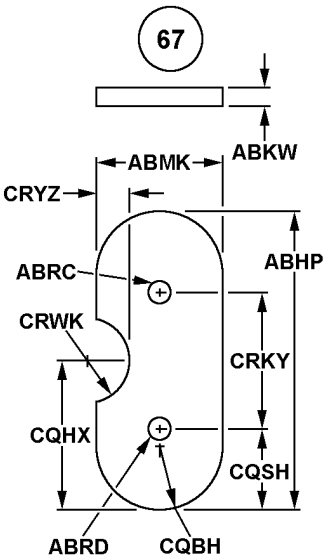

RECTANGULAR, ROUNDED ENDS

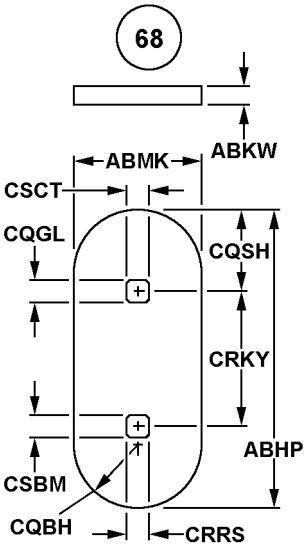

RECTANGULAR, ROUNDED ENDS

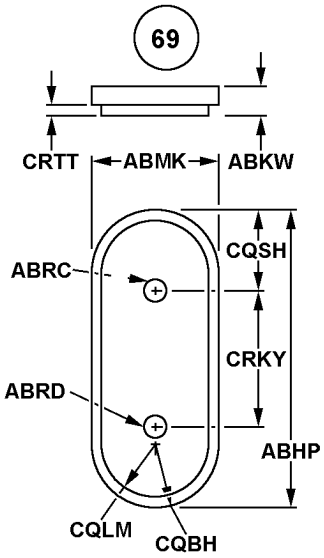

RECTANGULAR, ROUNDED ENDS

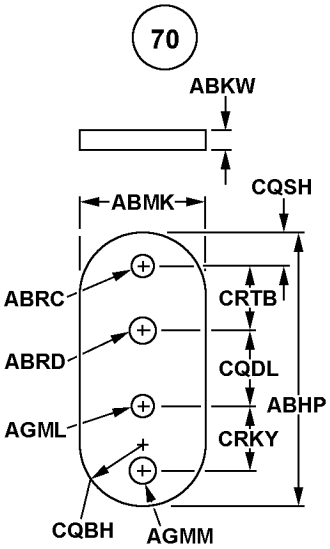

RECTANGULAR, ROUNDED ENDS

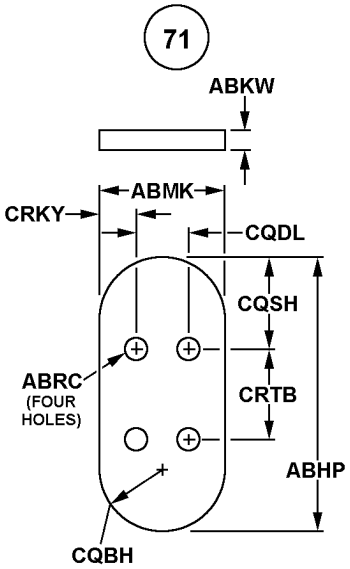

RECTANGULAR, ROUNDED ENDS

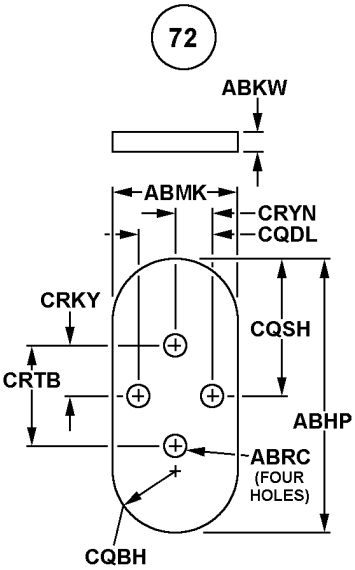

RECTANGULAR, ROUNDED ENDS

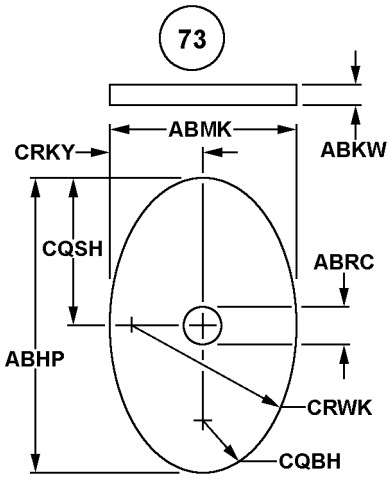

FLAT, OVAL

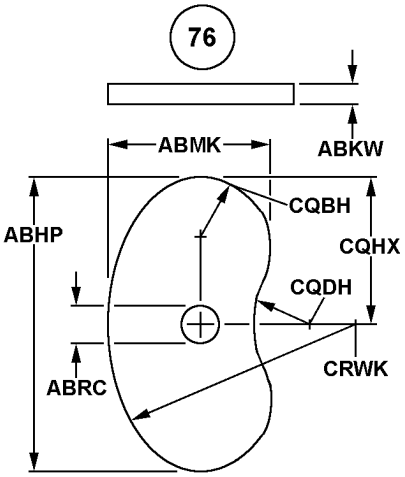

CURVED, ROUNDED ENDS

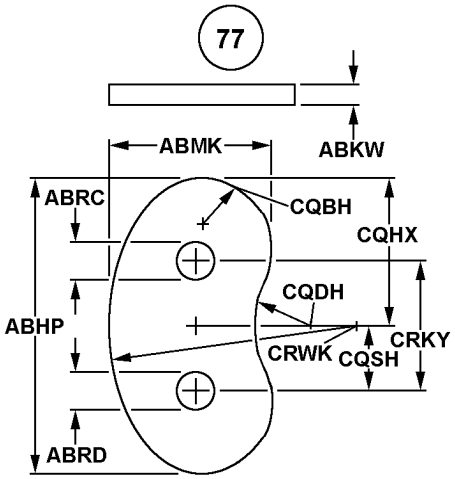

CURVED, ROUNDED ENDS

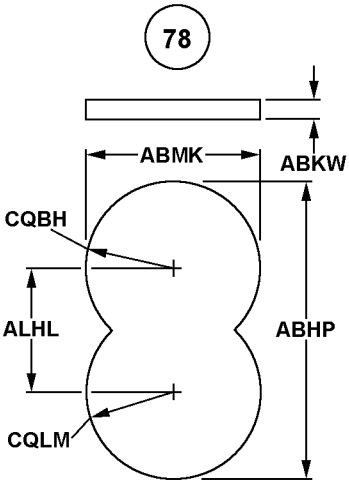

FLAT, FIGURE "8"

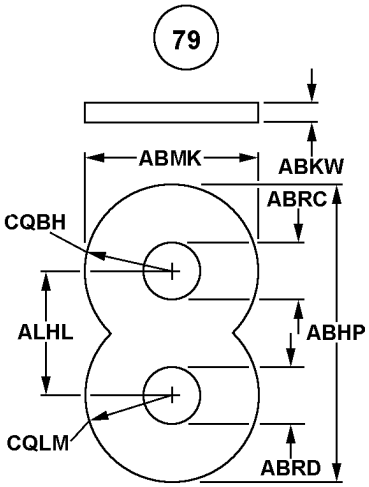

FLAT, FIGURE "8"

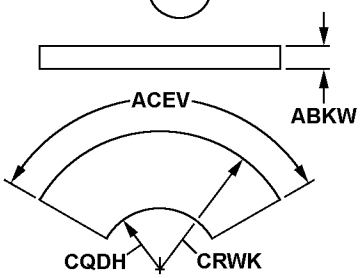

FLAT, CURVED

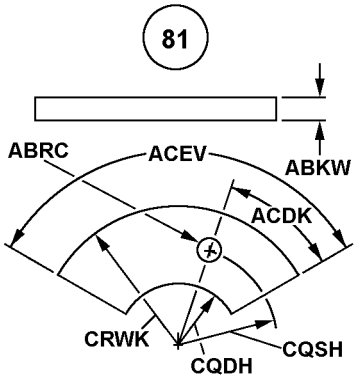

FLAT, CURVED

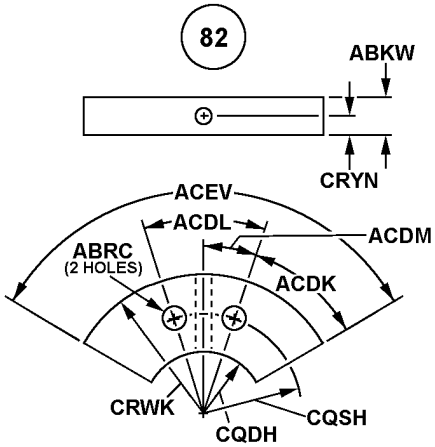

FLAT, CURVED

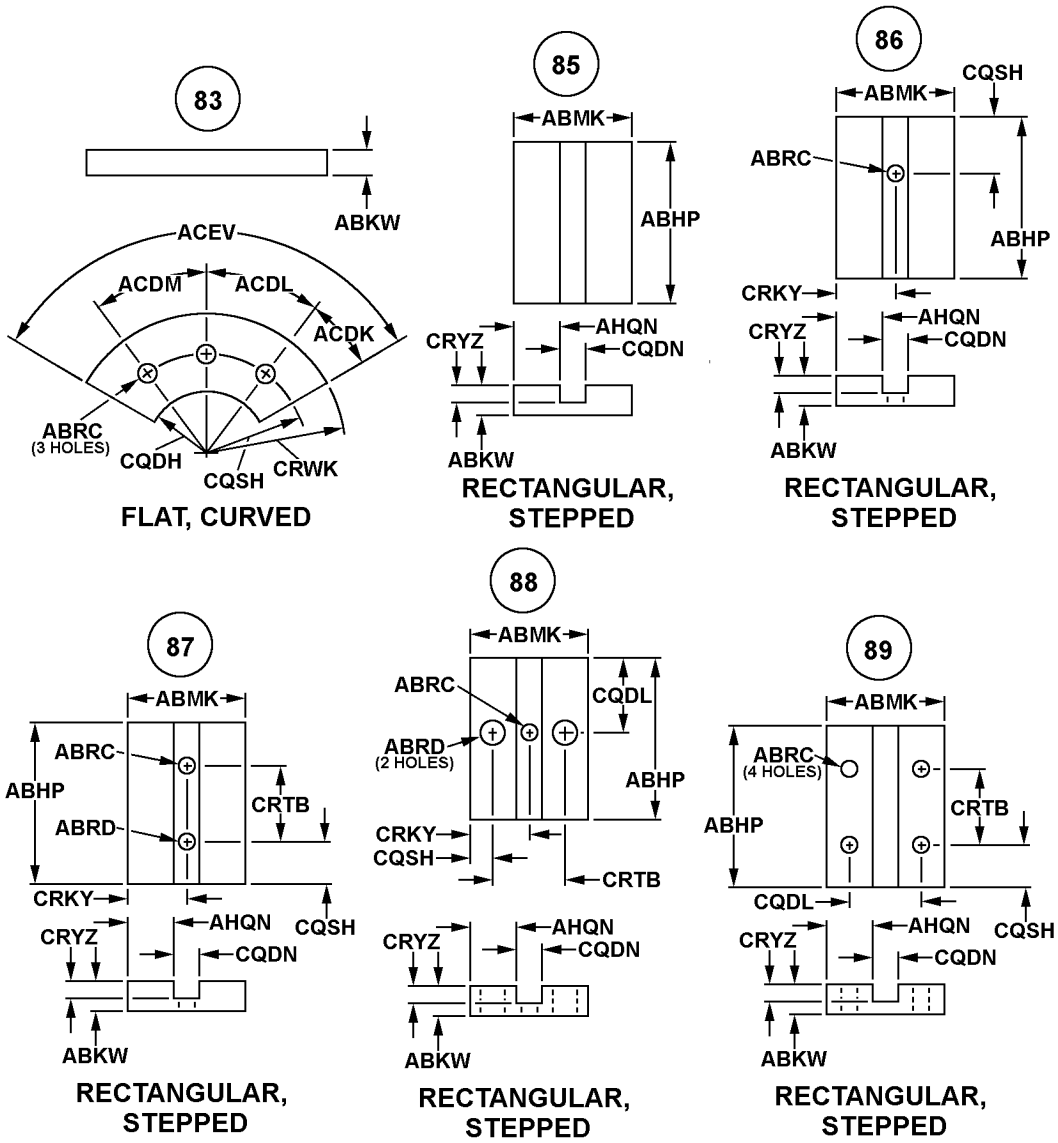
83
ABKW
ACEV
ACDM
ACDL
ACDK
ABRC
(3 HOLES)
CQDH
CQSH
CRWK
FLAT, CURVED
85
ABMK
ABHP
CRYZ
AHQN
CQDN
ABKW
RECTANGULAR,
STEPPED
86
CQSH
ABMK
ABRC
ABHP
CRKY
CRYZ
AHQN
CQDN
ABKW
RECTANGULAR,
STEPPED
87
ABMK
ABRC
ABHP
ABRD
CRTB
CRKY
CQSH
CRYZ
AHQN
CQDN
ABKW
RECTANGULAR,
STEPPED
88
ABMK
ABRC
CQDL
ABRD
(2 HOLES)
ABHP
CRKY
CQSH
CRTB
CRYZ
AHQN
CQDN
ABKW
RECTANGULAR,
STEPPED
89
ABMK
ABRC
(4 HOLES)
ABHP
CRTB
CQDL
CRYZ
AHQN
CQSH
CQDN
ABKW
RECTANGULAR,
STEPPED

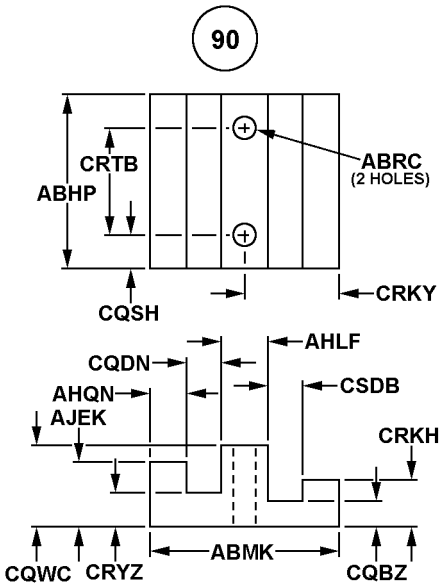

RECTANGULAR, STEPPED

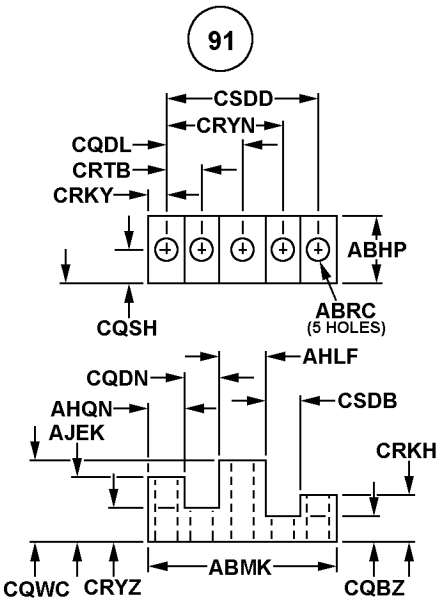

RECTANGULAR, STEPPED

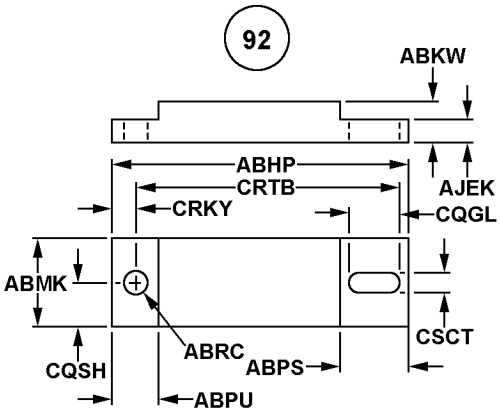

RECTANGULAR, STEPPED

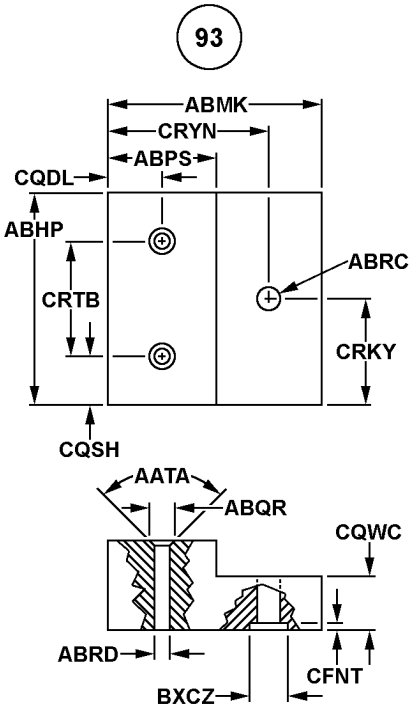

RECTANGULAR, STEPPED

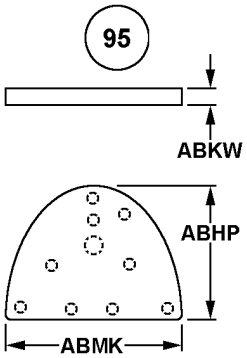

FLAT, IRREGULAR

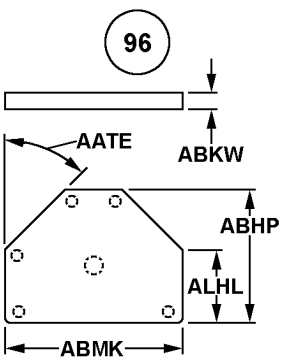

FLAT, IRREGULAR

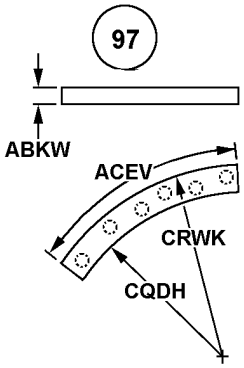

FLAT, CURVED

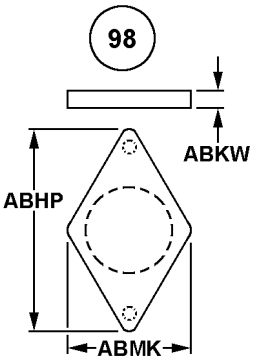

FLAT, DIAMOND

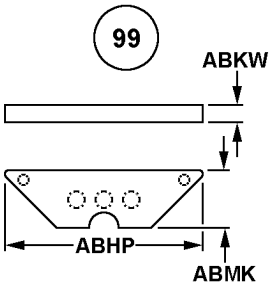

FLAT, TRAPEZOIDAL

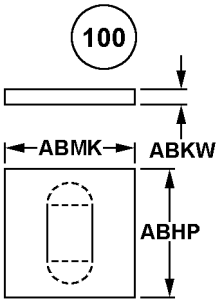

FLAT, SQUARE

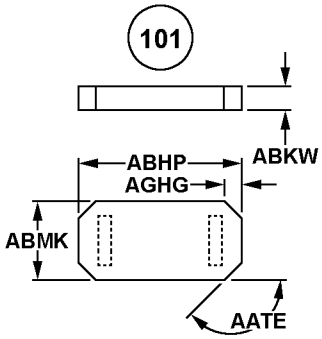

FLAT, RECTANGULAR,
FOUR LARGE CHAMFERS

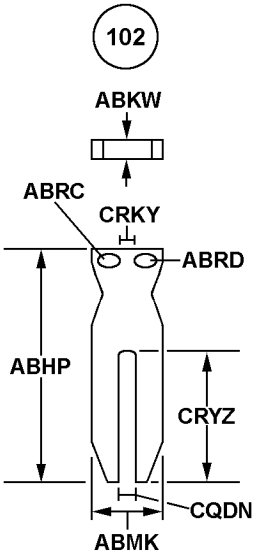

FLAT, IRREGULAR

REFERENCE DRAWING GROUP L Tables
INSULATOR, SPREADER

INDEX OF MASTER REQUIREMENT CODES

Enter the applicable Reply Codes from Tables 1 and 2 below, followed by the numeric value. (e.g., ABKVJAA1.250*; ABKVJLA25.4*; ABKVJAB1.245$$JAC1.255*)

REPLY CODE	REPLY (AA05)
A	INCHES
L	MILLIMETERS

REPLY CODE	REPLY (AC20)
A	NOMINAL
B	MINIMUM
C	MAXIMUM

MRC	Mode Code	Name of Dimension
ABHP	J	OVERALL LENGTH
ABKV	J	OUTSIDE DIAMETER
ABKW	J	OVERALL HEIGHT
ABMK	J	OVERALL WIDTH
CQBH	J	FIRST END RADIUS
CRLT	J	CONDUCTOR SEPARATION DISTANCE
CRZZ	J	WIRE HOLE DIAMETER
CSBD	J	FIRST DISTANCE FROM CONDUCTOR HOLE TO INSULATOR END

REFERENCE DRAWING GROUP L

INSULATOR, SPREADER

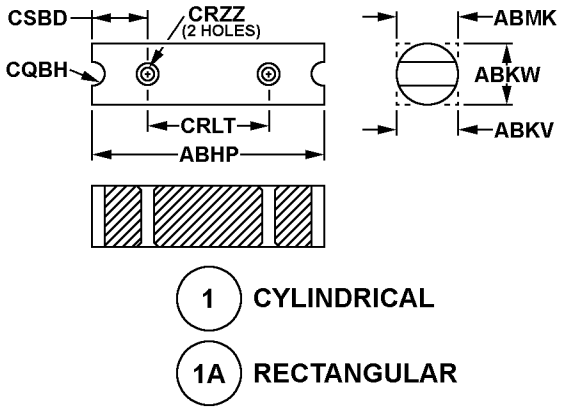

REFERENCE DRAWING GROUP M Tables
INSULATOR, STANDOFF

INDEX OF MASTER REQUIREMENT CODES

Enter the applicable Reply Code from Tables 1 and 2 below, followed by the numeric value. (e.g., ABKVJAA1.250*; ABKVJLA25.4*; ABKVJAB1.245$$JAC1.255*)

REPLY CODE	REPLY (AA05)
A	INCHES
L	MILLIMETERS

REPLY CODE	REPLY (AC20)
A	NOMINAL
B	MINIMUM
C	MAXIMUM

MRC	Mode Code	Name of Dimension
AATR	J	SHANK LENGTH
ABGB	J	WIDTH ACROSS CORNERS
ABHP	J	OVERALL LENGTH
ABKU	J	FLANGE THICKNESS
ABKV	J	OUTSIDE DIAMETER
ABKW	J	OVERALL HEIGHT
ABMK	J	OVERALL WIDTH
ABPS	J	FIRST STEP LENGTH
ABPU	J	SECOND STEP LENGTH
ABQR	J	COUNTERSINK MAJOR DIAMETER
ABRC	J	FIRST HOLE DIAMETER
ABRD	J	SECOND HOLE DIAMETER
ABTB	J	MOUNTING HOLE DIAMETER
ADEM	J	WASHER THICKNESS
ADUW	J	CENTER HOLE LENGTH
ADUX	J	CENTER HOLE WIDTH
AFFL	J	MOUNTING BOLT CIRCLE DIAMETER
AGEU	J	BASE DIAMETER
AGGZ	J	SHANK OUTSIDE DIAMETER
AHSJ	J	LEG LENGTH
AJCZ	J	BASE HEIGHT
AJHW	J	SECOND CORNER RADIUS

MRC	Mode Code	Name of Dimension
AJQL	J	TOP DIAMETER
AJWR	J	SHOULDER LENGTH
ASDB	J	WIDTH ACROSS FLATS
AYGJ	J	HEIGHT ABOVE MOUNTING SURFACE
BGJZ	J	BASE INSIDE DIAMETER
BQCT	J	TOP HOLE DIAMETER
BTPG	J	BOWL DEPTH
BXCZ	J	FIRST COUNTERBORE DIAMETER
CFNT	J	FIRST COUNTERBORE DEPTH
CQBH	J	FIRST END RADIUS
CQCL	J	INSERT FLANGE THICKNESS
CQDD	J	THIRD MOUNTING HOLE SPACING
CQDL	J	FOURTH HOLE SPACING
CQDN	J	FIRST SLOT WIDTH
CQFS	J	FIRST CAP HEIGHT
CQHX	J	FIRST CENTER DISTANCE
CQKY	J	FIRST MOUNTING HOLE SPACING
CQLF	J	GASKET THICKNESS
CQSH	J	FIRST HOLE SPACING
CRGB	J	FOURTH MOUNTING HOLE SPACING
CRJL	J	SECOND CAP HEIGHT
CRJN	J	SECOND MOUNTING HOLE SPACING
CRKC	J	CORNER CUT LENGTH
CRKY	J	SECOND HOLE SPACING
CRLT	J	CONDUCTOR SEPARATION DISTANCE
CRPR	J	SECOND CENTER DISTANCE
CRTB	J	THIRD HOLE SPACING
CRXQ	J	NONTURN FEATURE HOLE DEPTH
CRYZ	J	FIRST SLOT DEPTH
CRZZ	J	WIRE HOLE DIAMETER
CSBD	J	FIRST DISTANCE FROM CONDUCTOR HOLE TO INSULATOR END
CSBN	J	CORNER CUT WIDTH
CSBZ	J	TOP HOLE DEPTH
CSDJ	J	SECOND WIRE HOLE DIAMETER

Enter the numeric value. (e.g., ACDKB45.0*)

MRC	Mode Code	Name of Dimension
AATA	B	COUNTERSINK ANGLE IN DEG
ACDK	B	FIRST ANGULAR SPACING IN DEG

NOTE: IN REFERENCE DRAWING GROUP M, STYLES 14 AND 15 THE OPTIONAL SHAPE CANNOT BE SELECTED IF THE CYLINDRICAL SIDES EXCEED 25 PERCENT OF DIMENSIONAL MRC ABKW.

REFERENCE DRAWING GROUP M

INSULATOR, STANDOFF

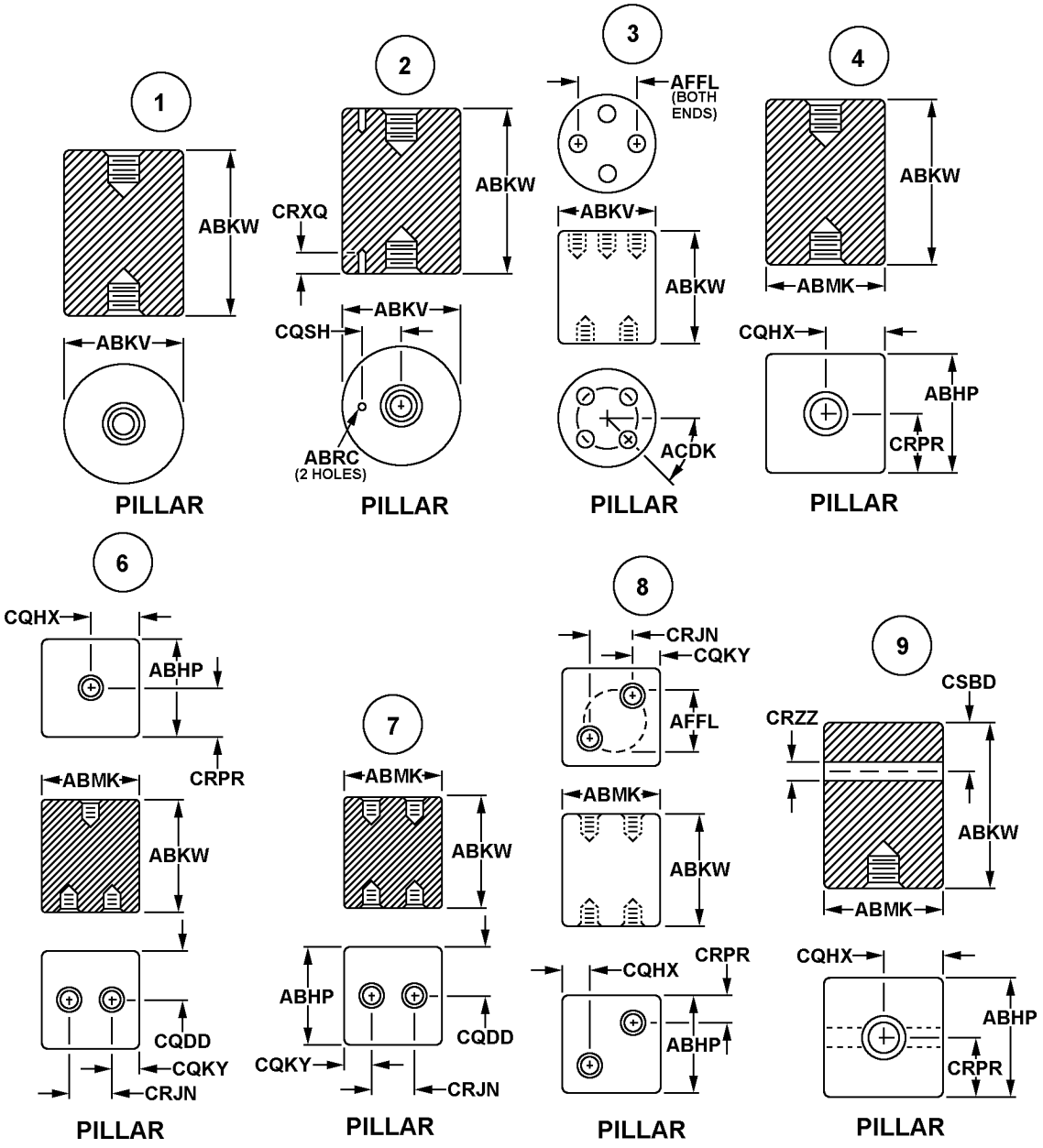

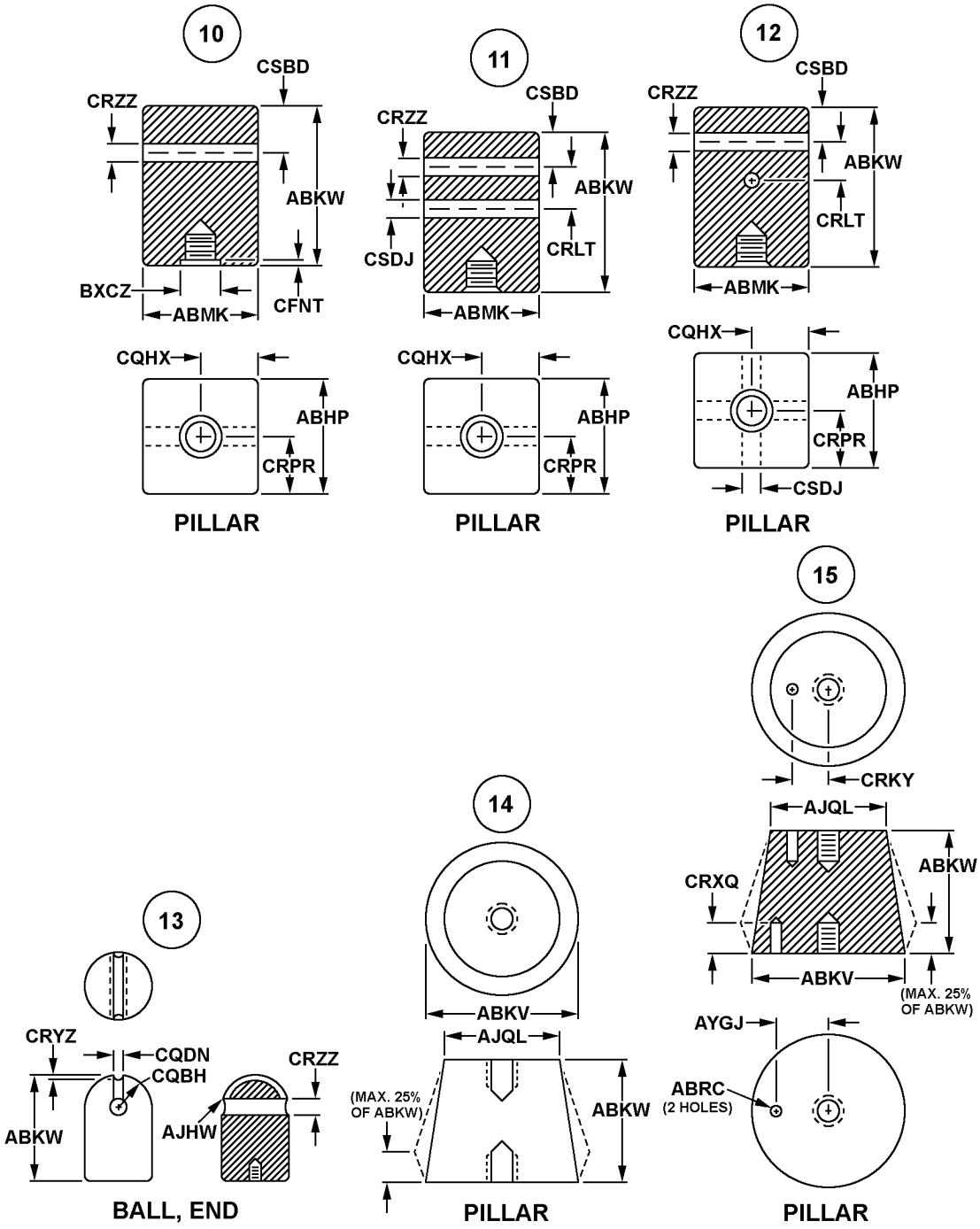
10
CSBD
CRZZ
ABKW
BXCZ
ABMK
CFNT
CQHX
ABHP
CRPR
PILLAR
11
CSBD
CRZZ
ABKW
CSDJ
CRLT
ABMK
CQHX
ABHP
CRPR
PILLAR
12
CSBD
CRZZ
ABKW
CRLT
ABMK
CQHX
ABHP
CRPR
CSDJ
PILLAR
13
CRYZ
CQDN
CQBH
ABKW
AJHW
CRZZ
BALL, END
14
ABKV
AJQL
(MAX. 25%
OF ABKW)
ABKW
PILLAR
15
CRKY
AJQL
CRXQ
ABKW
ABKV
(MAX. 25%
OF ABKW)
AYGJ
ABRC
(2 HOLES)
PILLAR

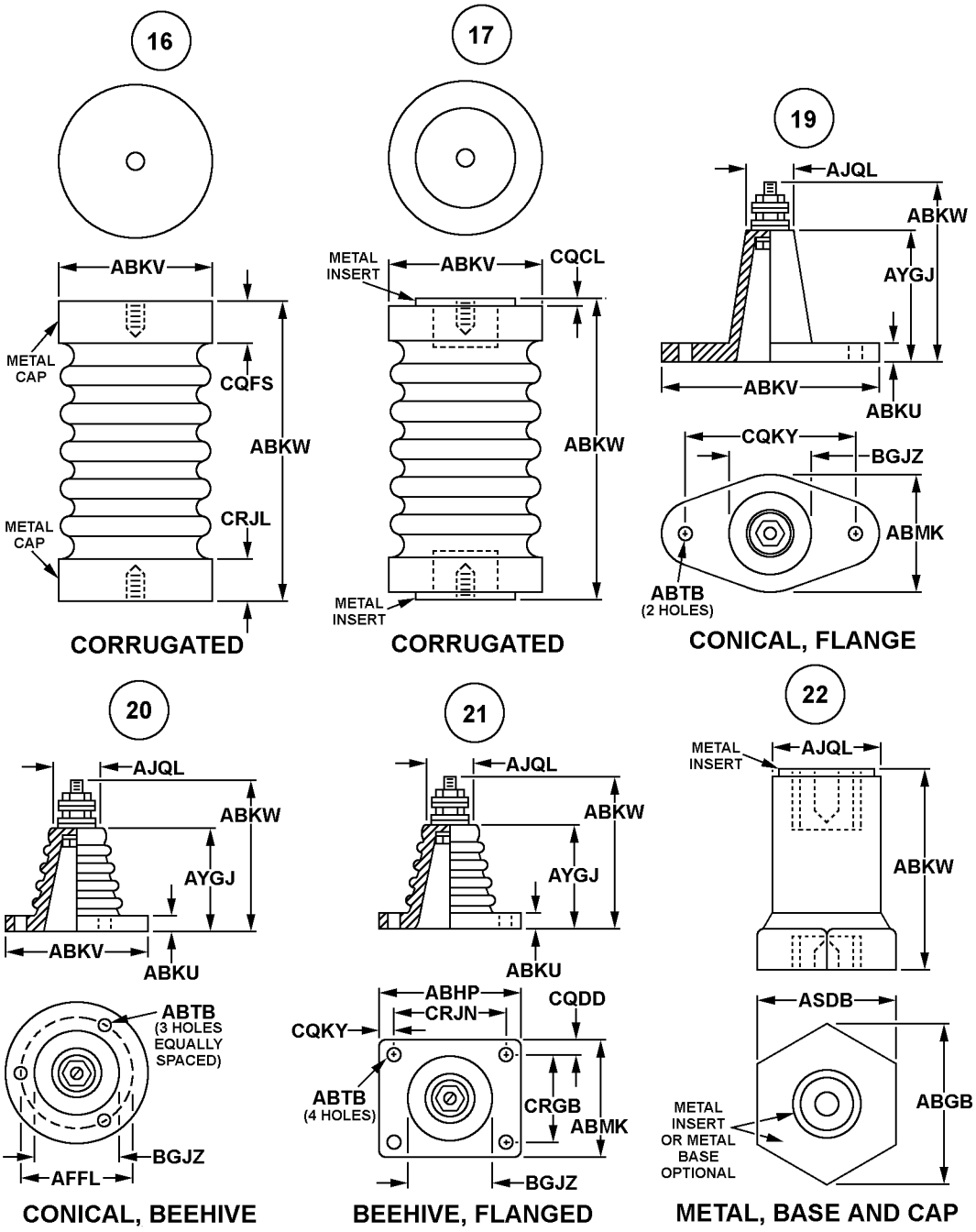
16
ABKV
METAL CAP
CQFS
ABKW
CRJL
METAL CAP
CORRUGATED
17
METAL INSERT
ABKV
CQCL
ABKW
METAL INSERT
CORRUGATED
19
AJQL
ABKW
AYGJ
ABKV
ABKU
CQKY
BGJZ
ABMK
ABTB (2 HOLES)
CONICAL, FLANGE
20
AJQL
ABKW
AYGJ
ABKV
ABKU
ABTB (3 HOLES EQUALLY SPACED)
BGJZ
AFFL
CONICAL, BEEHIVE
21
AJQL
ABKW
AYGJ
ABKU
ABHP
CRJN
CQDD
CQKY
ABTB (4 HOLES)
CRGB
ABMK
BGJZ
BEEHIVE, FLANGED
22
METAL INSERT
AJQL
ABKW
ASDB
ABGB
METAL INSERT OR METAL BASE OPTIONAL
METAL, BASE AND CAP

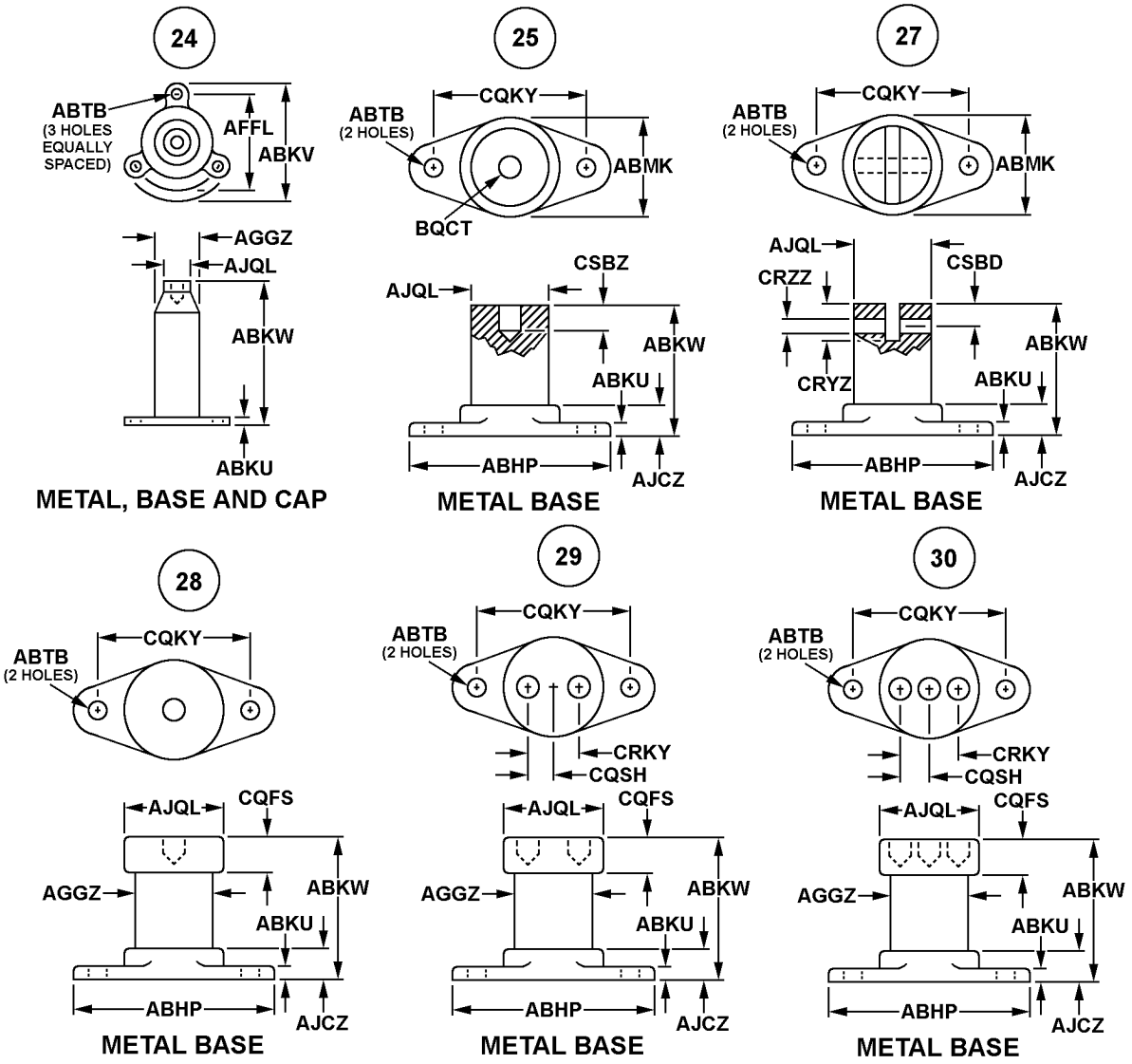
24
ABTB
(3 HOLES EQUALLY SPACED)
AFFL
ABKV
AGGZ
AJQL
ABKW
ABKU
METAL, BASE AND CAP
25
CQKY
ABTB
(2 HOLES)
ABMK
BQCT
CSBZ
AJQL
ABKW
ABKU
ABHP
AJCZ
METAL BASE
27
CQKY
ABTB
(2 HOLES)
ABMK
AJQL
CSBD
CRZZ
CRYZ
ABKW
ABKU
ABHP
AJCZ
METAL BASE
28
CQKY
ABTB
(2 HOLES)
AJQL
CQFS
AGGZ
ABKW
ABKU
ABHP
AJCZ
METAL BASE
29
CQKY
ABTB
(2 HOLES)
CRKY
CQSH
AJQL
CQFS
AGGZ
ABKW
ABKU
ABHP
AJCZ
METAL BASE
30
CQKY
ABTB
(2 HOLES)
CRKY
CQSH
AJQL
CQFS
AGGZ
ABKW
ABKU
ABHP
AJCZ
METAL BASE

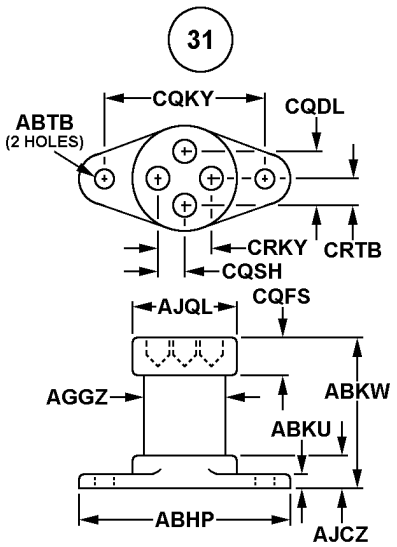

METAL BASE

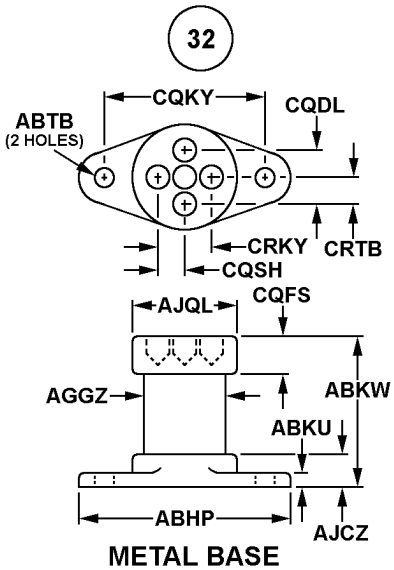

METAL BASE

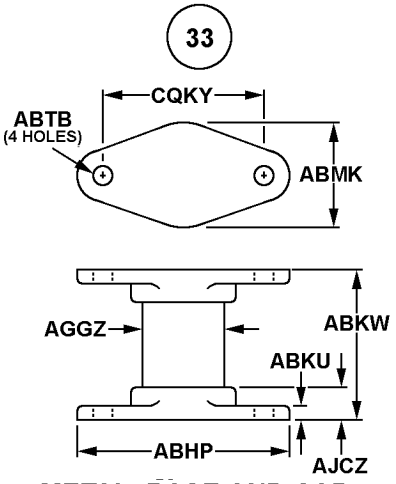

METAL, BASE AND CAP

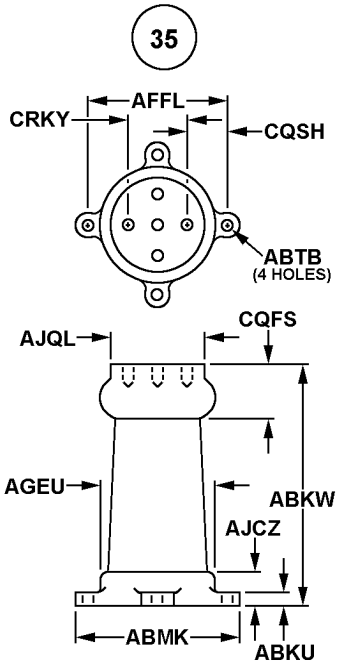

METAL BASE

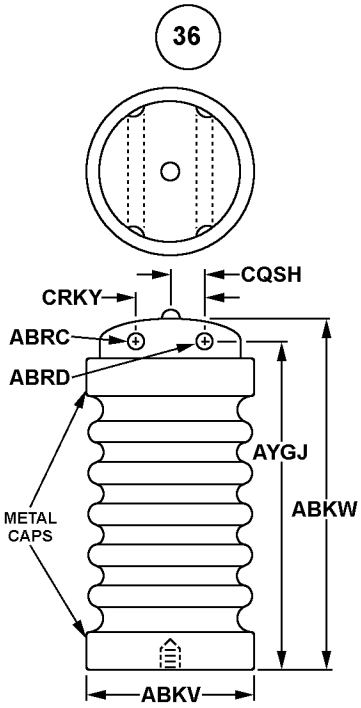

CORRUGATED, PEDESTAL

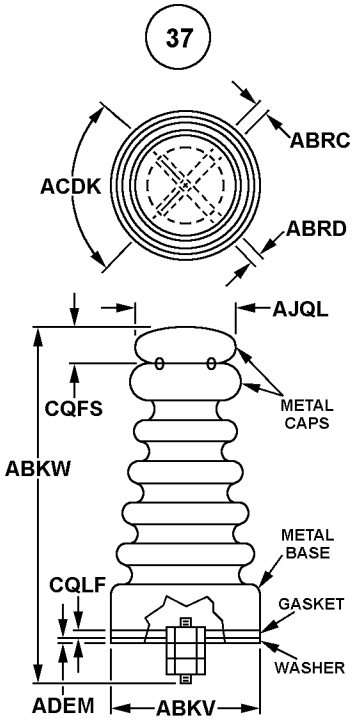

CONICAL, PEDESTAL

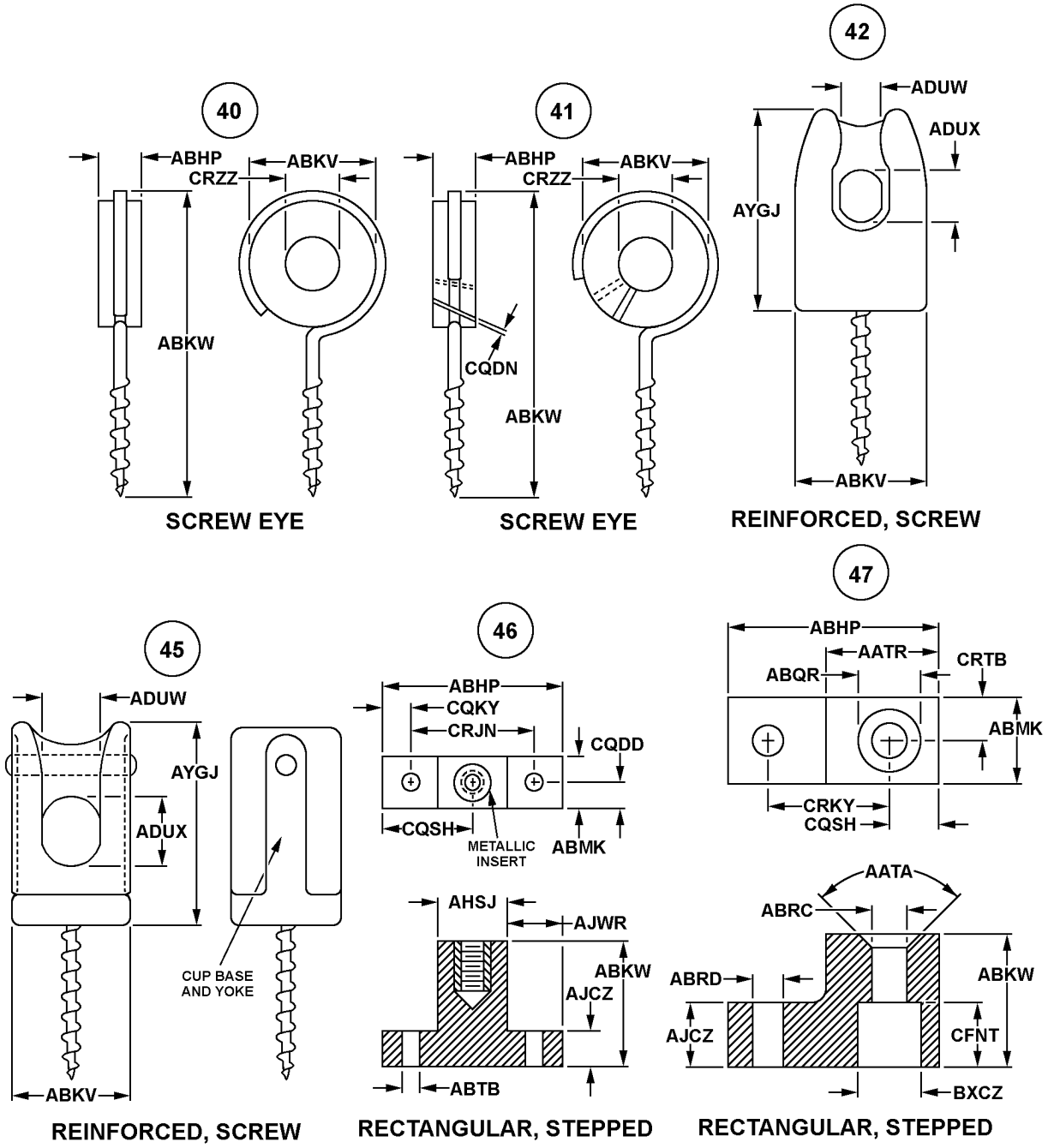
40
ABHP
CRZZ
ABKV
ABKW
SCREW EYE
41
ABHP
CRZZ
ABKV
CQDN
ABKW
SCREW EYE
42
ADUW
ADUX
AYGJ
ABKV
REINFORCED, SCREW
45
ADUW
AYGJ
ADUX
CUP BASE
AND YOKE
ABKV
REINFORCED, SCREW
46
ABHP
CQKY
CRJN
CQDD
CQSH
METALLIC
INSERT
ABMK
AHSJ
AJWR
ABKW
AJCZ
ABTB
RECTANGULAR, STEPPED
47
ABHP
AATR
ABQR
CRTB
ABMK
CRKY
CQSH
AATA
ABRC
ABRD
ABKW
AJCZ
CFNT
BXCZ
RECTANGULAR, STEPPED

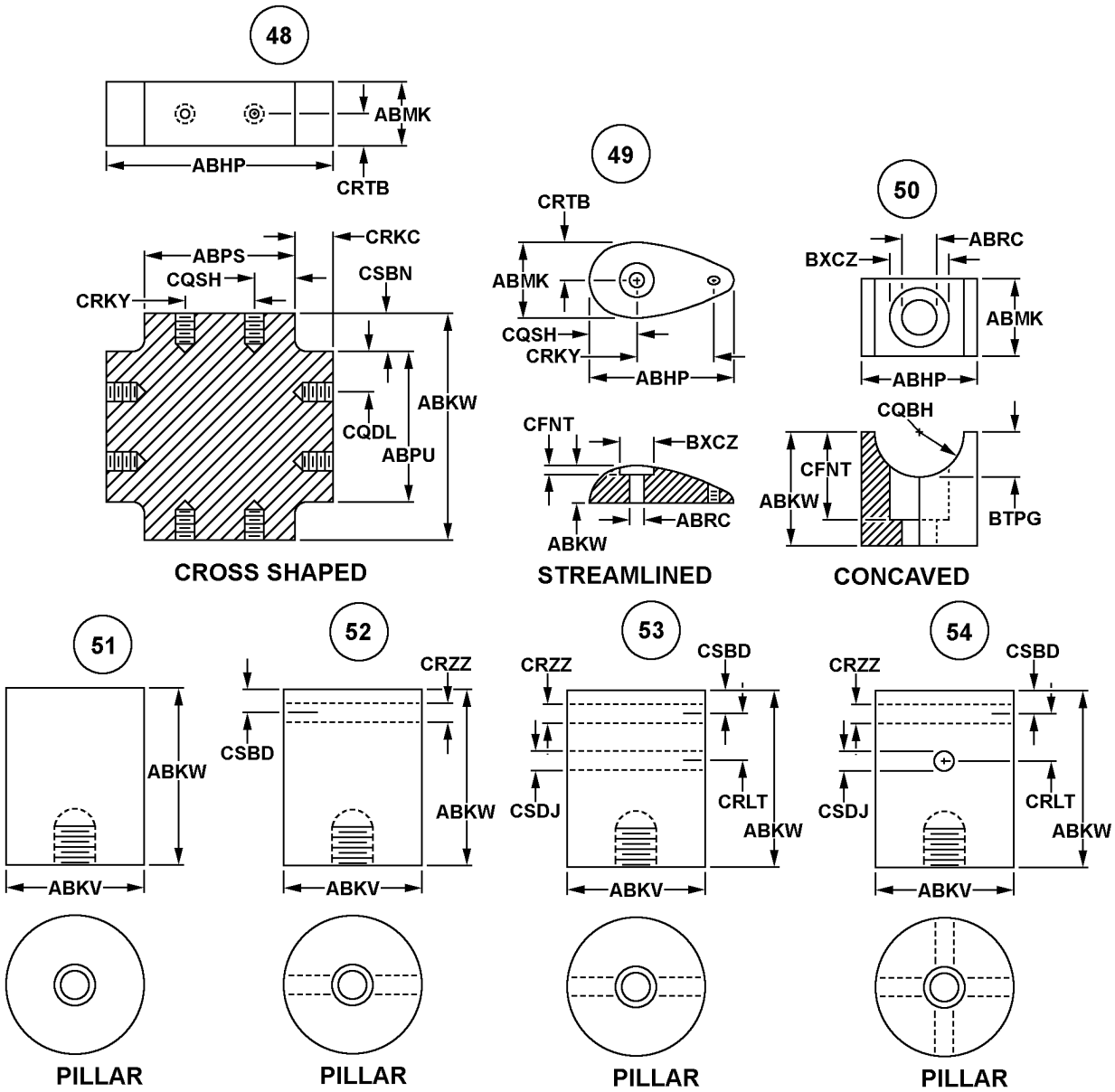
48
ABMK
ABHP
CRTB
ABPS
CRKC
CQSH
CSBN
CRKY
ABKW
CQDL
ABPU
CROSS SHAPED
49
CRTB
ABMK
CQSH
CRKY
ABHP
CFNT
BXCZ
ABRC
ABKW
STREAMLINED
50
ABRC
BXCZ
ABMK
ABHP
CQBH
CFNT
ABKW
BTPG
CONCAVED
51
ABKW
ABKV
PILLAR
52
CRZZ
CSBD
ABKW
ABKV
PILLAR
53
CRZZ
CSBD
CSDJ
CRLT
ABKW
ABKV
PILLAR
54
CRZZ
CSBD
CSDJ
CRLT
ABKW
ABKV
PILLAR

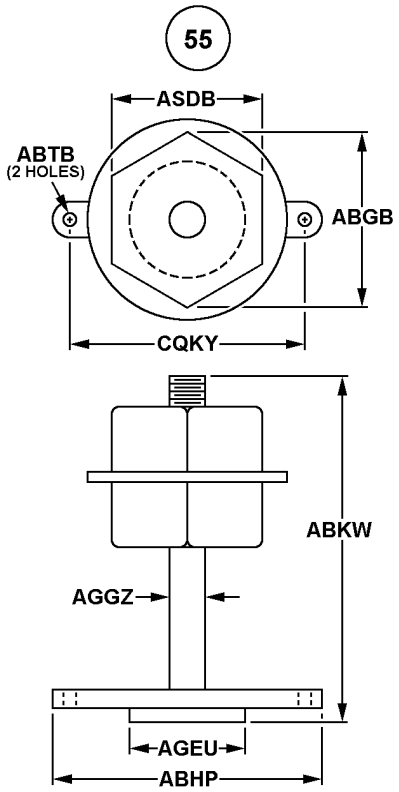

METAL, BASE AND CAP

REFERENCE DRAWING GROUP N Tables
INSULATOR, STRAIN

INDEX OF MASTER REQUIREMENT CODES

Enter the applicable Reply Codes from Tables 1 and 2 below, followed by the numeric value. (e.g., ABKVJAA1.250*; ABKVJLA25.4*; ABKVJAB1.245$$JAC1.255*)

REPLY CODE	REPLY (AA05)
A	INCHES
L	MILLIMETERS

REPLY CODE	REPLY (AC20)
A	NOMINAL
B	MINIMUM
C	MAXIMUM

MRC	Mode Code	Name of Dimension
AATR	J	SHANK LENGTH
ABHP	J	OVERALL LENGTH
ABKV	J	OUTSIDE DIAMETER
ABKW	J	OVERALL HEIGHT
ABMK	J	OVERALL WIDTH
ABTB	J	MOUNTING HOLE DIAMETER
ADMT	J	TAPERED HOLE MAJOR DIAMETER
AGGZ	J	SHANK OUTSIDE DIAMETER
AJHV	J	FIRST CORNER RADIUS
AJHW	J	SECOND CORNER RADIUS
ALHL	J	SIDE LENGTH
ANTS	J	RADIAL GROOVE RADIUS
CBYW	J	WIRE ROPE DIAMETER ACCOMMODATED
CQBH	J	FIRST END RADIUS
CQBY	J	SHACKLE WIDTH
CQCQ	J	FIRST TONGUE THICKNESS
CQDN	J	FIRST SLOT WIDTH
CQFS	J	FIRST CAP HEIGHT
CQGG	J	FIRST DISTANCE BETWEEN CONDUCTOR GROOVES
CQGL	J	FIRST HOLE LENGTH
CQHX	J	FIRST CENTER DISTANCE
CQMH	J	WIRE HOLE WIDTH

MRC	Mode Code	Name of Dimension
CRDK	J	SHACKLE LENGTH
CRFC	J	FIRST TONGUE LENGTH
CRJC	J	FIRST DISTANCE FROM CONDUCTOR GROOVE TO INSULATOR END
CRKD	J	SHACKLE THICKNESS
CRLT	J	CONDUCTOR SEPARATION DISTANCE
CRYZ	J	FIRST SLOT DEPTH
CRZZ	J	WIRE HOLE DIAMETER
CSBB	J	RADIAL GROOVE DIAMETER
CSBD	J	FIRST DISTANCE FROM CONDUCTOR HOLE TO INSULATOR END
CSBF	J	TAPERED HOLE DEPTH
CSBY	J	WIRE HOLE LENGTH
CSCT	J	FIRST HOLE WIDTH

REFERENCE DRAWING GROUP N

INSULATOR, STRAIN

1

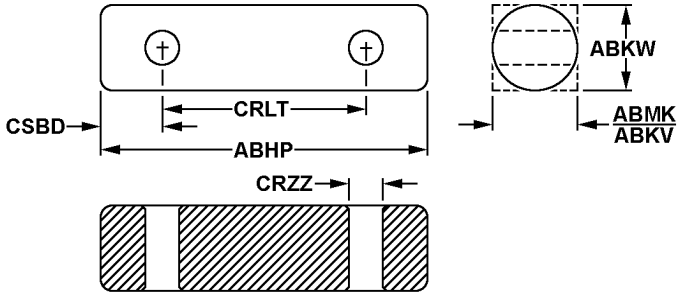

DOUBLE, END

2

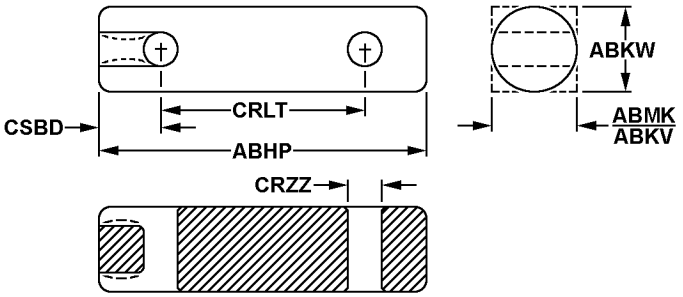

DOUBLE, END

3

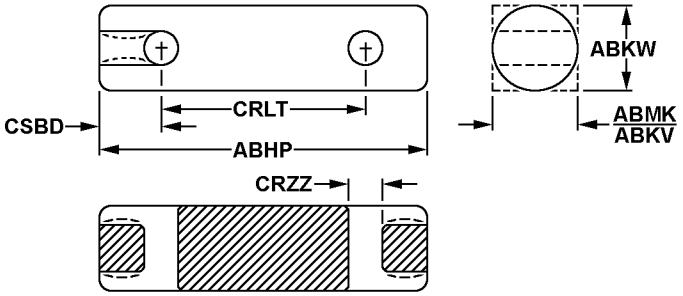

DOUBLE, END

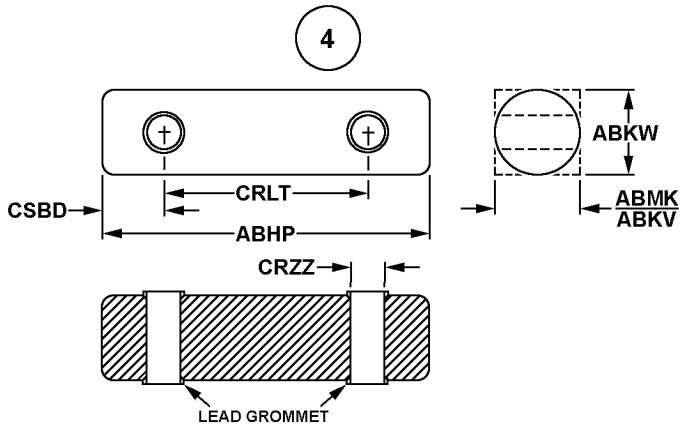

METALLIC, HARDWARE

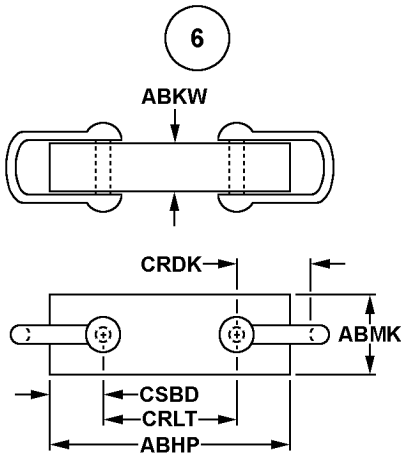

METALLIC, HARDWARE

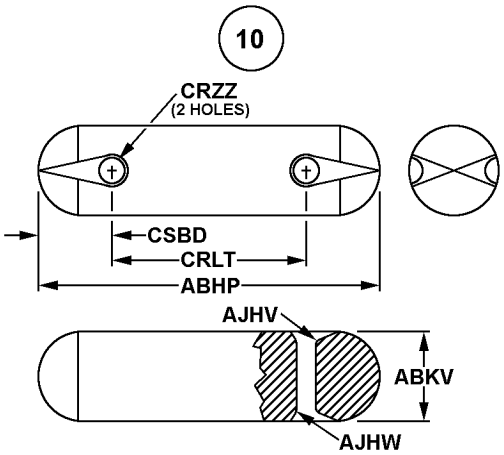

DOUBLE, BALL END

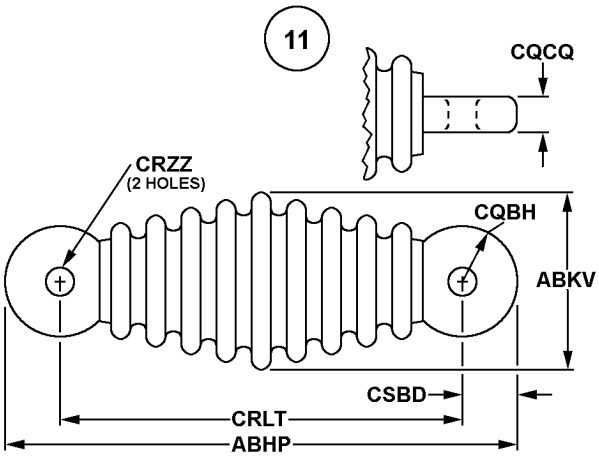

CORRUGATED, DOUBLE END

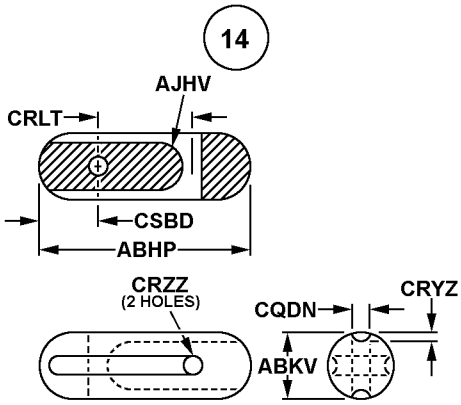

GUY, MISCELLANEOUS

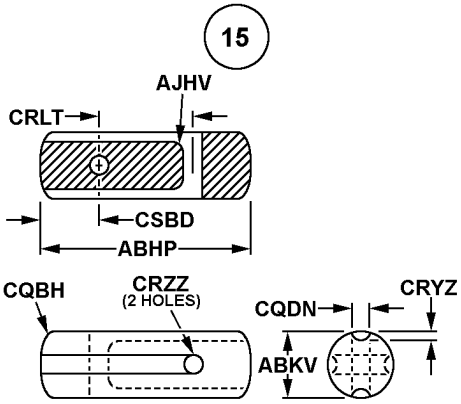

GUY, MISCELLANEOUS

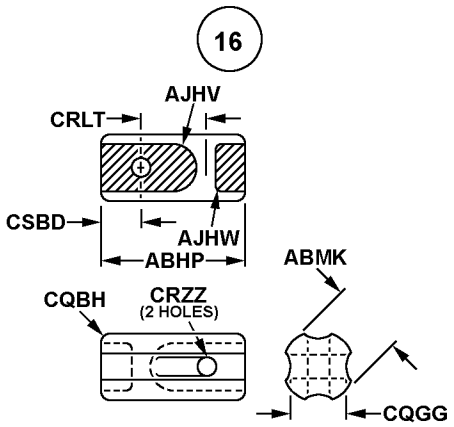

GUY, MISCELLANEOUS

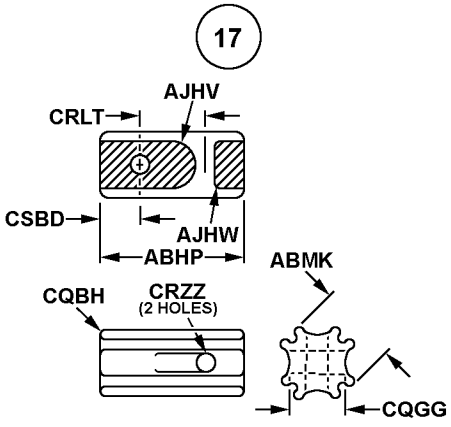

GUY, MISCELLANEOUS

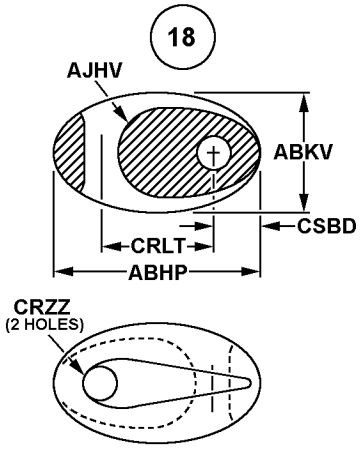

GUY, MISCELLANEOUS

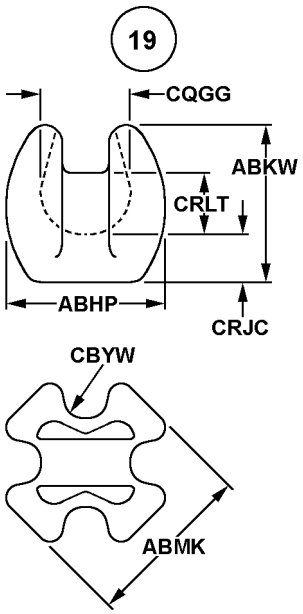

GUY, MISCELLANEOUS

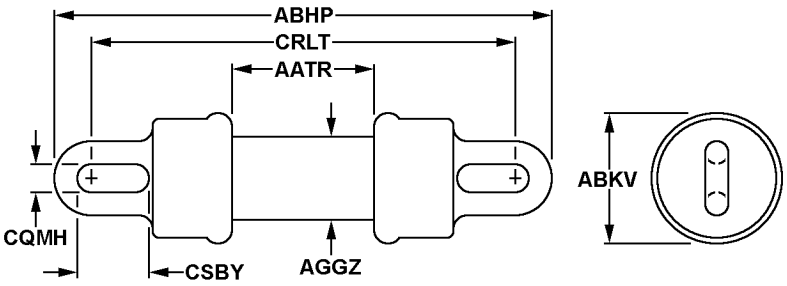

METALLIC, CAPS

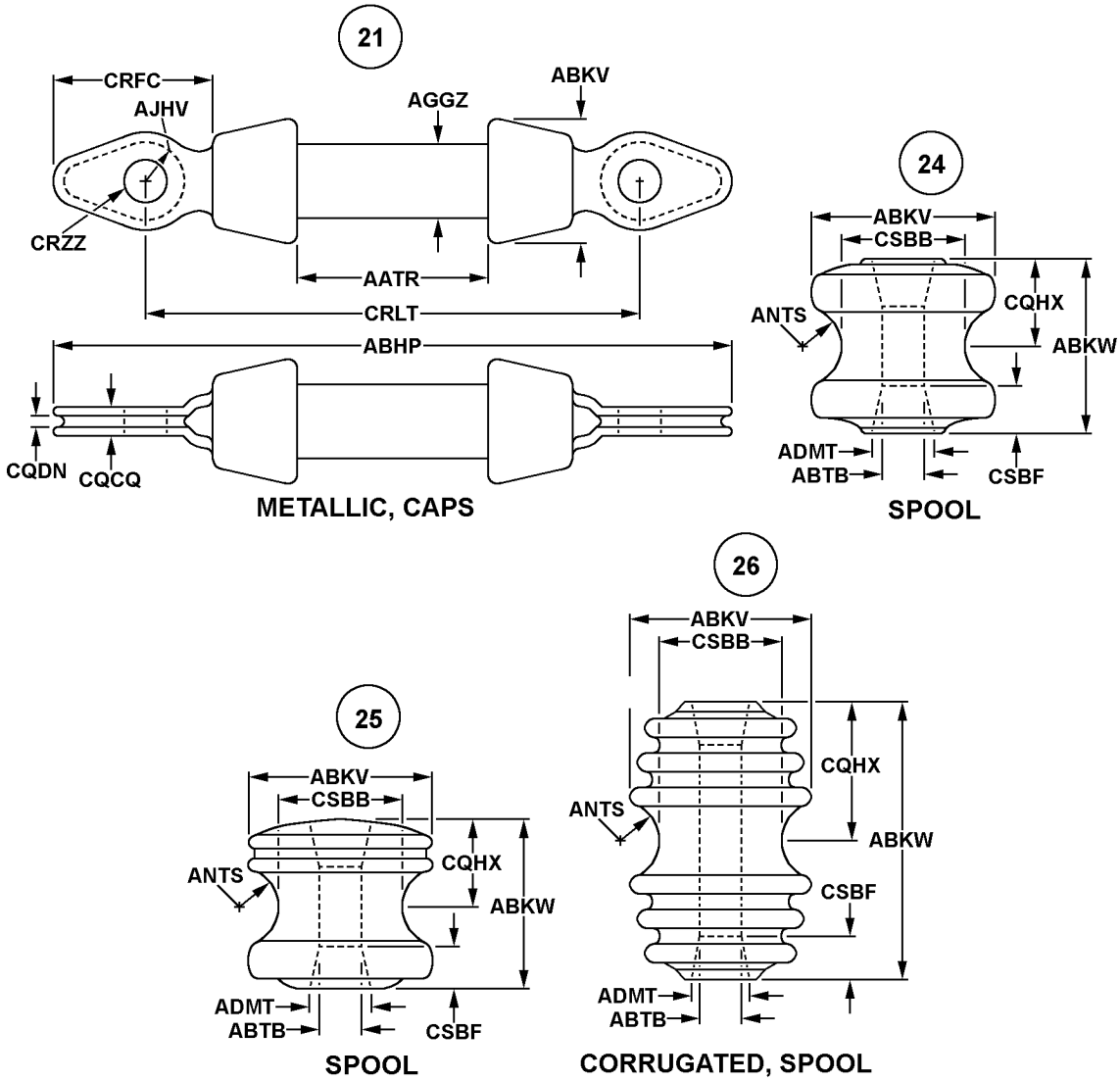
21
CRFC
AJHV
AGGZ
ABKV
CRZZ
AATR
CRLT
ABHP
CQDN
CQCQ
METALLIC, CAPS
24
ABKV
CSBB
CQHX
ANTS
ABKW
ADMT
ABTB
CSBF
SPOOL
25
ABKV
CSBB
CQHX
ANTS
ABKW
ADMT
ABTB
CSBF
SPOOL
26
ABKV
CSBB
CQHX
ANTS
ABKW
CSBF
ADMT
ABTB
CORRUGATED, SPOOL

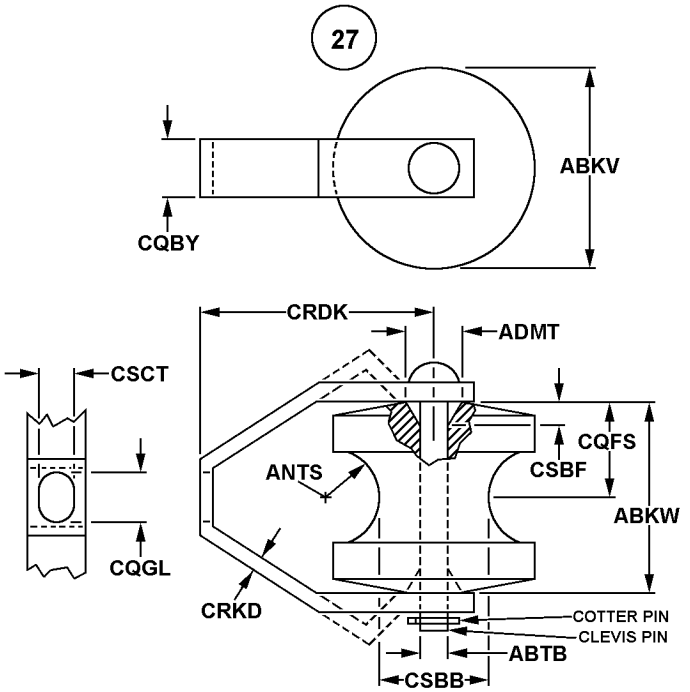

SPOOL WITH HARDWARE

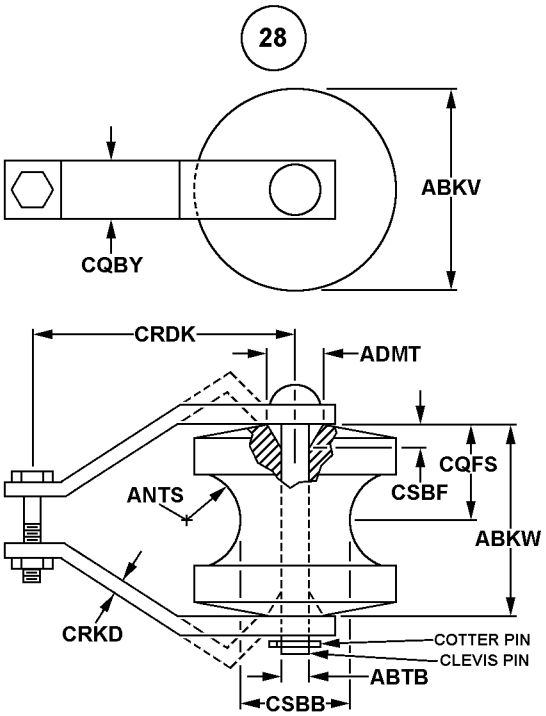

SPOOL WITH HARDWARE

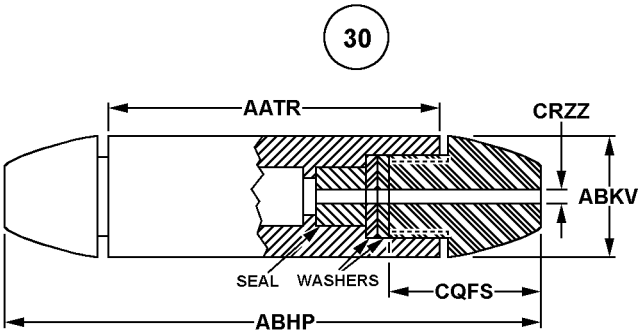

BUSHING, DOUBLE END

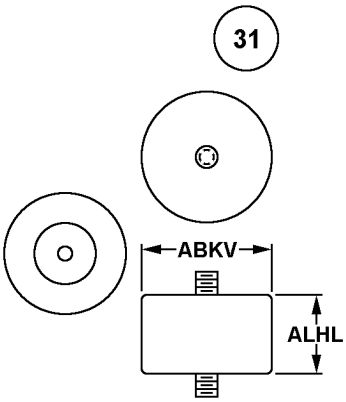

CYLINDRICAL

REFERENCE DRAWING GROUP P Tables
INSULATOR, SUSPENSION

INDEX OF MASTER REQUIREMENT CODES

Enter the applicable Reply Codes from Tables 1 and 2 below, followed by the numeric value. (e.g., ABKVJAA1.250*; ABKVJLA24.5*; ABKVJAB1.245$$JAC1.255*)

REPLY CODE	REPLY (AA05)
A	INCHES
L	MILLIMETERS

REPLY CODE	REPLY (AC20)
A	NOMINAL
B	MINIMUM
C	MAXIMUM

MRC	Mode Code	Name of Dimension
ABKV	J	OUTSIDE DIAMETER
ABKW	J	OVERALL HEIGHT
ABTB	J	MOUNTING HOLE DIAMETER
ABVV	J	PIN DIAMETER
AHHG	J	DISTANCE BETWEEN LEGS
AHSJ	J	LEG LENGTH
CQKY	J	FIRST MOUNTING HOLE SPACING
CRTW	J	DISTANCE FROM INSIDE OF MOUNTING HOLE TO OUTSIDE SURFACE

REFERENCE DRAWING GROUP P

INSULATOR, SUSPENSION

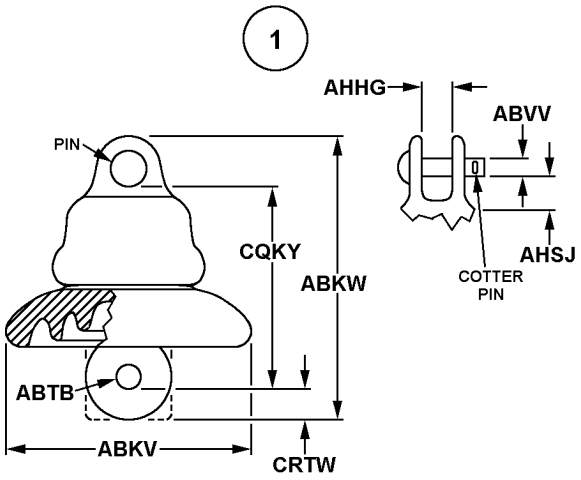

CLEVIS

REFERENCE DRAWING GROUP Q Tables
INSULATOR, WASHER

INDEX OF MASTER REQUIREMENT CODES

Enter the applicable Reply Codes from the Tables 1 and 2 below, followed by the numeric value. (e.g., ABKVJAA1.250*; ABKVJLA25.4*; ABKVJAB1.245$$JAC1.255*)

REPLY CODE	REPLY (AA05)
A	INCHES
L	MILLIMETERS

REPLY CODE	REPLY (AC20)
A	NOMINAL
B	MINIMUM
C	MAXIMUM

MRC	Mode Code	Name of Dimension
AARX	J	INSIDE DIAMETER
ABKV	J	OUTSIDE DIAMETER
ABKW	J	OVERALL HEIGHT
CQBS	J	FIRST KEY WIDTH
CQGL	J	FIRST HOLE LENGTH
CRBF	J	FIRST KEY THICKNESS
CSCT	J	FIRST HOLE WIDTH

Enter the numeric value. (e.g., AATEB45.0*)

MRC	Mode Code	Name of Dimension
AATE	B	CHAMFER ANGLE IN DEG

REFERENCE DRAWING GROUP Q

INSULATOR, WASHER

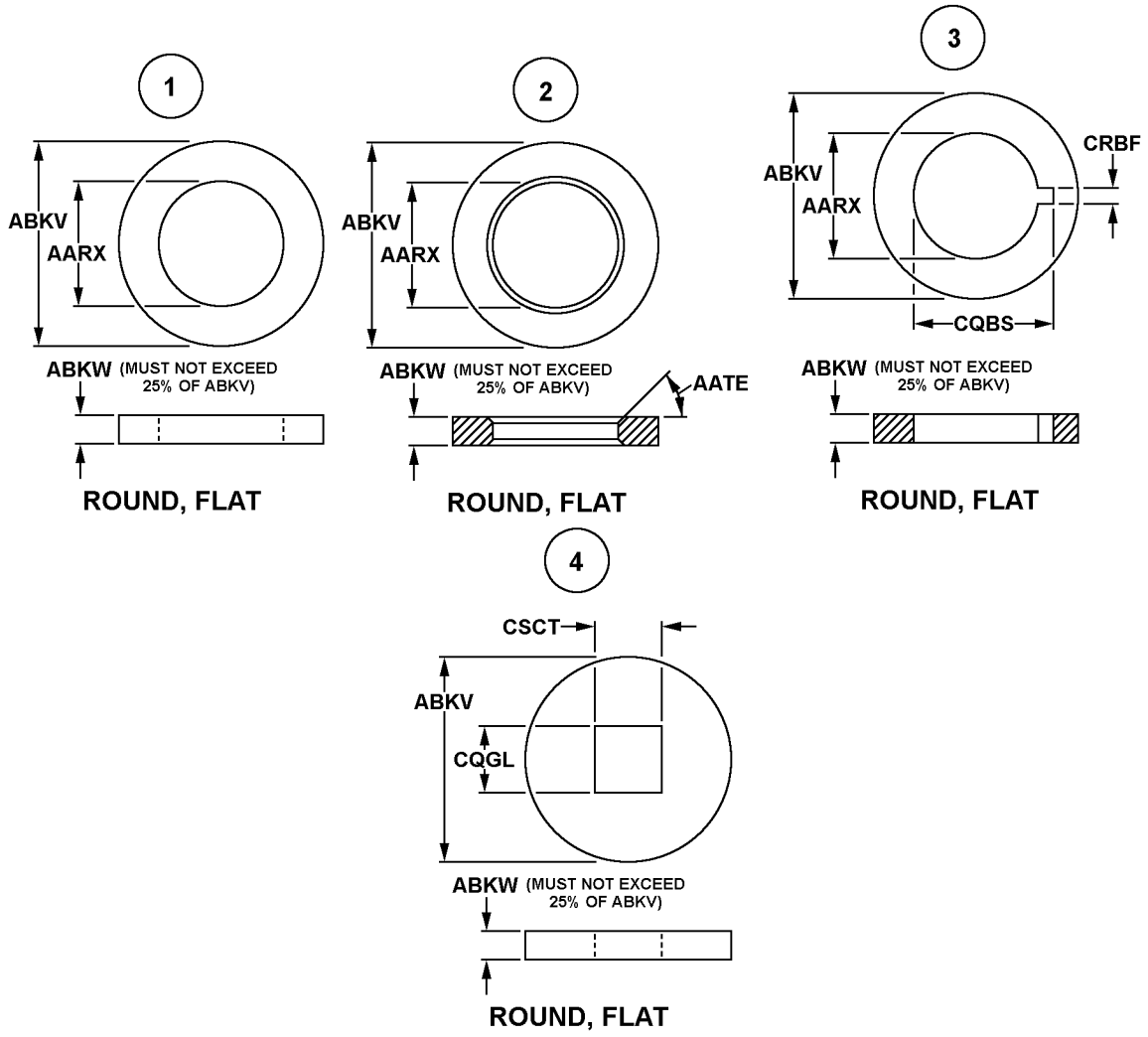

Technical Data Tables

CONDUCTOR SIZE CONVERSION CHART Bare Stranded-sizes 350,000 CM to No. 8 AWG Equivalent SOLID COPPERWELD WIRE-BARE..... 174
OUNCE TO DECIMAL OF A POUND CONVERSION CHART 184
THREAD SIZE/SERIES 185
SCREW THREAD SERIES DEFINITIONS 195
ISO METRIC SCREW THREAD SIZE/THREAD PITCH *..... 195
WOODSCREWS 197
UNITS OF MASS CONVERSION CHART 197
UNIT OF MEASURE CONVERSION TABLE (METRIC) 198

STANDARD FRACTION TO DECIMAL CONVERSION CHART

4ths	8ths	16ths	32nds	64ths	To 3	To 4	4ths	8ths	16ths	32nds	64ths	To 3	To 4
				1/64	.016	.0156					33/64	.516	.5156
			1/32	-----	.031	.0312				17/32	------	.531	.5312
				3/64	.047	.0469					35/64	.547	.5469
		1/16	-----		.062	.0625			9/16	-----	-----	.562	.5625
				5/64	.078	.0781					37/64	.578	.5781
			3/32	-----	.094	.0938				19/32	------	.594	.5938
				7/64	.109	.1094					39/64	.609	.6094
	1/8	-----	-----	-----	.125	.1250		5/8	-----	-----	-----	.625	.6250
				9/64	.141	.1406					41/64	.641	.6406
			5/32	-----	.156	.1562				21/32	------	.656	.6562
				11/64	.172	.1719					43/64	.672	.6719
		3/16	-----	-----	.188	.1875			11/16	-----	-----	.688	.6875
				13/64	.203	.2031					45/64	.703	.7031
			7/32	------	.219	.2188				23/32	------	.719	.7188
				15/64	.234	.2344					47/64	.734	.7344
1/4	-----	-----	-----	-----	.250	.2500	3/4	-----	-----	-----	-----	.750	.7500
				17/64	.266	.2656					49/64	.766	.7656
			9/32	------	.281	.2812				25/32	------	.781	.7812
				19/64	.297	.2969					51/64	.797	.7969
		5/16	-----	-----	.312	.3125			13/16	-----	-----	.812	.8125
				21/64	.328	.3281					53/64	.828	.8281
			11/32	------	.344	.3438				27/32	------	.844	.8438
				23/64	.359	.3594					55/64	.859	.8594
	3/8	-----	-----	-----	.375	.3750		7/8	-----	-----	-----	.875	.8750
				25/64	.391	.3906					57/64	.891	.8906
			13/32	------	.406	.4062				29/32	------	.906	.9062
				27/64	.422	.4219					59/64	.922	.9219
		7/16	-----	-----	.438	.4375			15/16	-----	-----	.938	.9375
				29/64	.453	.4531					61/64	.953	.9531
			15/32	------	.469	.4688				31/32	------	.969	.9688
				31/64	.484	.4844					63/64	.984	.9844
					.500	.5000						1.000	1.0000

CONDUCTOR SIZE CONVERSION CHART
Bare Stranded-sizes 350,000 CM to No. 8 AWG Equivalent
SOLID COPPERWELD WIRE-BARE

CONDUCTORS	COPPER		ALUMINUM		A.C.S.R.		
Diameter (inch)	Cable Size A.W.G. Or C.M.	Stranding	Cable Size A.W.G. Or C.M.	Stranding	Cable Size A.W.G. Or C.M.	Stranding	
Alum.	St.						
.0253	22	SOL.	--	--	--	--	--
.0285	21	SOL.	--	--	--	--	--
.0320	20	SOL.	--	--	--	--	--
.0365	20	19	--	--	--	--	--
.0359	19	SOL.	--	--	--	--	--
.0403	18	SOL.	--	--	--	--	--
.0460	18	19	--	--	--	--	--
.0453	17	SOL.	--	--	--	--	--
.0508	16	SOL.	--	--	--	--	--
.0585	16	19	--	--	--	--	--
.0571	15	SOL.	--	--	--	--	--
.0641	14	SOL.	--	--	--	--	--
.0735	14	19	--	--	--	--	--
.0720	13	SOL.	--	--	--	--	--
.0808	12	SOL.	12	SOL.	--	--	--
.0925	12	19	--	--	--	--	--
.0907	11	SOL.	11	SOL.	--	--	--
.1019	10	SOL.	10	SOL.	--	--	--
.117	10	19	--	--	--	--	--
.1144	9	SOL.	9	SOL.	--	--	--
.131	9	19	--	--	--	--	--
.128	8	SOL.	8	SOL.	--	--	--
.146	8	7	--	--	--	--	--
.158	--	--	--	--	8	6	1
.162	6	SOL.	6	SOL.	--	--	--
.184	6	7	6	7	--	--	--
.198	--	--	--	--	6	6	1
.204	4	SOL.	4	SOL.	--	--	--
.232	4	7	4	7	--	--	--
.250	--	--	--	--	4	6	1
.257	--	--	--	---	4	7	1

CONDUCTORS	COPPER		ALUMINUM		A.C.S.R.		
Diameter (inch)	Cable Size A.W.G. Or C.M.	Stranding	Cable Size A.W.G. Or C.M.	Stranding	Cable Size A.W.G. Or C.M.	Stranding	
Alum.	St.						
.258	2	SOL.	2	SOL.	--	--	--
.289	1	SOL.	--	--	--	--	--
.292	2	7	2	7	--	--	--
.316	--	--	--	--	2	6	1
.325	0	SOL.	--	--	2	7	1
.328	1	7	1	7	--	--	--
.332	1	19	1	19	--	--	--
.355	--	--	--	--	1	6	1
.365	00	SOL.	--	--	--	--	--
.368	0	7	0	7	--	--	--
.373	0	19	0	19	--	--	--
.398	--	--	--	--	0	6	1
.410	000	SOL.	--	--	--	--	--
.414	00	7	00	7	--	--	--
.418	00	19	00	19	--	--	--
.447	--	--	--	--	00	6	1
.460	0000	SOL.	--	--	--	--	--
.464	000	7	000	7	--	--	--
.470	000	19	000	19	--	--	--
.502	--	--	--	--	000	6	1
.522	0000	7	0000	7	--	--	--
.528	0000	19	0000	19	--	--	--
.563	--	--	--	--	0000	6	1
.574	250,000	19	--	--	--	--	--
.575	250,000	37	250,000	37	--	--	--
.586	--	--	266,800	7	--	--	--
.593	--	--	266,800	19	--	--	--
.609	--	--	--	--	266,800	18	1
.629	300,000	19	300,000	37	--	--	--
.630	300,000	37	--	--	--	--	--
.633	--	--	--	--	266,800	6	7
.642	--	--	--	--	266,800	26	7
.666	--	--	336,400	19	--	--	--
.679	350,000	19	--	--	--	--	--
.680	--	--	--	--	300,000	26	7
.681	350,000	37	350,000	37	--	--	--
.684	--	--	--	--	336,400	18	1
.721	--	--	--	--	336,400	26	7
.724	--	--	397,500	19	--	--	--

CONDUCTORS	COPPER		ALUMINUM		A.C.S.R.		
Diameter (inch)	Cable Size A.W.G. Or C.M.	Stranding	Cable Size A.W.G. Or C.M.	Stranding	Cable Size A.W.G. Or C.M.	Stranding	
Alum.	St.						
.726	400,000	19	--	--	--	--	--
.728	400,000	37	400,000	37	--	--	--
.741	--	--	--	--	336,400	30	7
.743	--	--	--	--	397,500	18	1
.772	450,000	37	450,000	37	--	--	--
.783	--	--	477,000	19	397,500	26	7
.795	--	--	477,000	37	--	--	--
.806	--	--	--	--	397,500	30	7
.813	500,000	37	500,000	37	--	--	--
.814	--	--	--	--	477,000	18	1
.846	--	--	--	--	477,000	24	7
.853	550,000	37	--	--	--	--	--
.855	550,000	61	550,000	61	--	--	--
.856	--	--	556,500	19	--	--	--
.858	--	--	556,500	37	477,000	26	7
.883	--	--	--	--	477,000	30	7
.891	600,000	37	--	--	--	--	--
.893	600,000	61	600,000	61	--	--	--
.914	--	--	--	--	556,500	24	7
.918	--	--	636,000	37	--	--	--
.928	--	--	--	--	556,500	26	7
.929	650.000	61	650,000	61	--	--	--
.930	--	--	--	--	636,000	36	1
.964	700,000	61	700,000	61	--	--	--
.966	--	--	--	--	605,000	26	7
.974	--	--	715,500	37	--	--	--
.975	--	--	715,500	61	--	--	--
.977	--	--	--	--	636,000	24	7
.990	--	--	--	--	636,000	26	7
.994	--	--	--	--	605,000	30	19
.998	750,000	61	750,000	61	--	--	--
1.000	--	--	--	--	666,000	24	7
1.019	--	--	--	--	636,000	30	19
1.026	--	--	795,000	37	--	--	--
1.028	--	--	795,000	61	--	--	--
1.031	800,000	61	800,000	61	--	--	--
1.036	--	--	--	--	715,500	54	1
1.051	--	--	--	--	715,500	26	7
1.077	--	--	874,500	37	--	--	

CONDUCTORS	COPPER		ALUMINUM		A.C.S.R.		
Diameter (inch)	Cable Size A.W.G. Or C.M.	Stranding	Cable Size A.W.G. Or C.M.	Stranding	Cable Size A.W.G. Or C.M.	Stranding	
Alum.	St.						
1.078	--	--	874,500	61	--	--	--
1.081	--	--	--	--	715,500	30	19
1.093	--	--	--	--	795,000	54	7
1.094	900,000	61	900,000	61	--	--	--
1.108	--	--	--	--	795,000	26	7
1.124	--	--	954,000	37	--	--	--
1.125	--	--	954,000	61	--	--	--
1.140	--	--	--	--	795,000	30	19
1.146	--	--	--	--	874,500	54	7
1.152	1,000,000	61	1,000,000	61	--	--	--
1.162	--	--	--	--	900,000	54	7
1.170	--	--	1,033,500	37	--	--	--
1.172	--	--	1,033,500	61	--	--	--
1.196	--	--	--	--	954,000	54	7
1.209	1,100,000	61 & 91	1,100,000	91	--	--	--
1.216	--	--	1,113,000	61	--	--	--
1.246	--	--	--	--	1,033,500	54	7
1.263	1,200,000	61 & 91	1,200,000	91	--	--	--
1.288	1,250,000	61	--	--	--	--	--
1.289	1,250,000	91	1,250,000	91	--	--	--
1.293	--	--	--	--	1,113,000	54	19
1.300	--	--	1,272,000	61	--	--	--
1.314	1,300,000	61	--	--	--	--	--
1.315	1,300,000	91	1,300,000	91	--	--	--
1.364	1,400,000	61 & 91	1,400,000	91	--	--	--
1.379	--	--	1,431,000	61	--	--	--
1.382	--	--	--	--	1,272,000	54	19
1.411	1,500,000	61	--	--	--	--	--
1.412	1,500,000	91	1,500,000	91	--	--	--
1.454	--	--	1,590,000	61&91	--	--	--
1.459	1,600,000	91 & 127	1,600,000		--	--	--
1.465	--	--	--	--	1,431,000	54	19
1.504	1,700,000	91 & 127	1,700,000	127	--	--	--
1.526	1,750,000	91 & 127	1,750,000	127	--	--	--
1.545	--	--	--	--	1,590,000	54	19
1.547	1,800,000	91	--	--	--	--	--
1.548	1,800,000	127	1,800,000	127	--	--	--
1.590	1,900,000	91 & 127	1,900,000	127	--	--	--
1.630	2,000,000	91	--	--	--	--	--

CONDUCTORS	COPPER		ALUMINUM		A.C.S.R.		
Diameter (inch)	Cable Size A.W.G. Or C.M.	Stranding	Cable Size A.W.G. Or C.M.	Stranding	Cable Size A.W.G. Or C.M.	Stranding	
Alum.	St.						
1.631	2,000,000	127	2,000,000	127	--	--	--
1.823	2,500,000	91	--	--	--	--	--
1.824	2,500,000	127	2,500,000	127	--	--	--
1.998	3,000,000	127 & 169	3,000,000	169	--	--	--
2.158	3,500,000	127	3,500,000	169	--	--	--
2.159	3,500,000	169	--	--	--	--	--
2.307	4,000,000	169	--	--	--	--	--
2.309	4,000,000	217	--	--	--	--	--
2.448	4,500,000	169 & 217	--	--	--	--	--
2.580	5,000,000	169	--	--	--	--	--
2.581	5,000,000	217	--	--	--	--	--

Conductor Diameter (inch)	Type	DESIGN OF CONDUCTOR		
No. & Dia. E.H.S. 30&&% Cond. Copperweld Wires	No. & Dia. Hard Drawn Copper Wires	AWG Equivalent Cir. Mils of Copper		
.788	E	7-.1576	12-.1576	350,000
.735	EK	4-.1470	15-.1470	350,000
.729	E	7-.1459	12-.1459	300,000
.680	EK	4-.1361	15-.1361	300,000
.666	E	7-.1332	12-.1332	250,000
.621	EK	4-.1242	15-.1242	250,000
.613	E	7-.1225	12-.1252	211,600 (4/0)
.583	G	2-.1944	5-.1944	211,600 (4/0)
.571	EK	4-.1143	15-.1143	211,600 (4/0)
.550	F	1-.1833	6-.1833	211,600

Conductor Diameter (inch)	Type	DESIGN OF CONDUCTOR		
No. & Dia. E.H.S. 30&&% Cond. Copperweld Wires	No. & Dia. Hard Drawn Copper Wires	AWG Equivalent Cir. Mils of Copper		
				(4/0)
.545	E	7-.1091	12-.1091	167,800 (3/0)
.555	J	3-.1851	4-.1851	167,800 (3/0)
.519	G	2-.1731	5-.1731	167,800 (3/0)
.509	EK	4-.1018	15-.1018	167,800 (3/0)
.490	F	1-.1632	6-.1632	167,800 (3/0)
.534	K	4-.1780	3-.1780	133,000 (2/0)
.494	J	3-.1648	4-.1648	133,000 (2/0)
.463	G	2-.1542	5-.1542	133,000 (2/0)
.436	F	1-.1454	6-.1454	133,000 (2/0)
.475	K	4-.1585	3-.1585	105,500 (1/0)
.440	J	3-.1467	4-.1467	105,500 (1/0)
.412	G	2-.1373	5-.1373	105,500 (1/0)
.388	F	1-.1294	6-.1294	105,500 (1/0)
.464	N	5-.1546	2-.1506	83,690-NO. 1
.423	K	4-.1412	3-.1412	83,690-NO. 1
.392	J	3-.1307	4-.1307	83,690-NO. 1
.367	G	2-.1222	5-.1222	83,690-NO. 1
.346	F	1-.1153	6-.1153	83,690-NO. 1
.462	P	6-.1540	1-.1540	66,370-NO. 2
.413	N	5-.1377	2-.1377	66,370-NO. 2

Conductor Diameter (inch)	Type	DESIGN OF CONDUCTOR		
No. & Dia. E.H.S. 30&&% Cond. Copperweld Wires	No. & Dia. Hard Drawn Copper Wires	AWG Equivalent Cir. Mils of Copper		
.377	K	4-.1257	3-.1257	66,370-NO. 2
.349	J	3-.1164	4-.1164	66,370-NO. 2
.366	A	1-.1699	2-.1699	66,370-NO. 2
.327	G	2-.1089	5-.1089	66,370-NO. 2
.308	F	1-.1026	6-.1026	66,370-NO. 2
.411	P	6-.1371	1-.1371	52,630-NO. 3
.368	N	5-.1226	2-.1226	52,630-NO. 3
.336	K	4-.1120	3-.1120	52,630-NO. 3
.311	J	3-.1036	4-.1036	52,630-NO. 3
.326	A	1-.1513	2-.1513	52,630-N0. 3
.366	P	6-.1221	1-.1221	41,740-NO. 4
.328	N	5-.1092	2-.1092	41,740-NO. 4
.348	D	2-.1615	1-.1615	41,740-NO. 4
.290	A	1-.1347	2-.1347	41,740-NO. 4
.326	P	6-.1087	1-.1087	33,100-NO. 5
.310	D	2-.1438	1-.1438	33,100-NO. 5
.258	A	1-.1200	2-.1200	33,100-NO. 5
.276	D	2-.1281	1-.1281	26,250-NO. 6
.230	A	1-.1068	2-.1068	26,250-NO. 6
.2225	A	1-.1046*	2-.1046	26,250-NO. 6
.246	D	2-.1141	1-.1141	20,820-

Conductor Diameter (inch)	Type	DESIGN OF CONDUCTOR		
No. & Dia. E.H.S. 30&&% Cond. Copperweld Wires	No. & Dia. Hard Drawn Copper Wires	AWG Equivalent Cir. Mils of Copper		
.223	A	1-.1266	2-.08949	NO. 7 20,820- NO. 7
.219	D	2-.1016	1-.1016	16,510- NO. 8
.199	A	1-.1127	2-.07969	16,510- NO. 8
.179	A	1-.08081*	2-.08336	16,510- NO. 8

NOMINAL DIAMETER INCHES	ACTUAL	CROSS SECTION
SIZE A.W.G.	DIA. INCHES	CIRCULAR MILS
4/0	.4600	211,600
3/0	.4096	167,800
2/0	.3648	133,100
0	.3249	105,500
1	.2893	83,690
2	.2576	66,370
3	.2294	52,630
4	.2043	41,740
5	.1819	33,100
165	.1650	27,230
6	.1620	26,250
7	.1443	20,820
8	.1285	16,510
128	.1280	16,380
9	.1144	13,090
104	.1040	10,820
10	.1019	10,380
12	.08081	6,530
080	.0800	6,400

For Standard Navy Cable

Navy Size Number	Size Designation	Nominal Size, CM	Copper Dia. In.	Nearest Equivalent AWG Size
	1/5(1)-26	254	0.0159	26
	1/5(7)-26	230	.0162	26
	2/5(1)-24	404	.020	24
1/5-1	2/5(7)-24	442	.025	24
	1/2(21)	525	.026	23
	3/5(1)	642	.025	22
	3/5(7)	700	.030	22
	1(1)	1,022	.032	20
	1(1)	1,022	.032	20
	1(7)	1,020	.039	20
	1(10)	1,005	.038	20
1-2	1-1/2(1)	1,624	.040	18
	1-1/2(7)	1,624	.049	18
	1-1/2(16)	1,608	.049	18
	1-1/2(41)	1,630	.049	18
	2(7)	1,779	.048	18
	2-1/2(1)	2,533	.051	16
	2-1/2(19)	2,407	.060	16
	2-1/2(26)	2,613	.061	16
2-1/2-4	3(7)	2,328	.060	16
	4(1)	4,107	.064	14
	4(7)	4,497	.076	14
	4(29)	3,828	.072	14
	4(41)	4,121	.077	14
	6(7)	6,512	.092	12
6-9	6(19)	6,088	.090	12
	9(7)	9,016	.108	11
	9(37)	9,402	.109	10
14	14(7)	14,340	.136	9
	14(140)	14,070	.145	9
23	23(7)	22,800	.171	7
30	30(19)	30,860	.202	5
40	40(19)	38,910	.226	4
50	50(19)	49,080	.254	3
60	60(37)	60,090	.282	2
75	75(37)	75,780	.317	1
100	100(61)	99,060	.363	1/0
125	125(61)	124,900	.407	2/0

For Standard Navy Cable

Navy Size Number	Size Designation	Nominal Size, CM	Copper Dia. In.	Nearest Equivalent AWG Size
150	150(61)	157,600	.457	3/0
200	200(61)	198,700	.514	4/0
250	250(61)	250,500	.577	250 MCM
300	300(91)	296,400	.628	300 MCM
350	350(91)	349,800	.682	350 MCM
400	400(127)	413,600	.742	400 MCM
500	500(127)	521,600	.832	500 MCM
650	650(127)	657,600	.936	650 MCM
800	800(127)	829,300	1.060	800 MCM
1,000	1,000(127)	1,046,000	1.180	1000 MCM
1,300	1,300(127)	1,318,000	1.325	1300 MCM
1,600	1,600(127)	1,662,000	1.455	1600 MCM
2,000	2,000(127)	2,097,000	1.670	2000 MCM

AWG	INCH	MM
		14.73
		13.12
0000	0.4600	11.68
000	0.4096	10.40
00	0.3648	9.27
0	0.3249	8.25
1	0.2893	7.35
2	0.2576	6.54
3	0.2294	5.83
4	0.2043	5.19
5	0.1819	4.62
6	0.1620	4.11
7	0.1443	3.67
8	0.1285	3.26
9	0.1144	2.91
10	0.1019	2.59
11	0.0907	2.30
12	0.0808	2.05
13	0.0720	1.83
14	0.0641	1.63
15	0.0571	1.45
16	0.0508	1.29

AWG	INCH	MM
17	0.0453	1.15
18	0.0403	1.02
19	0.0359	0.91
20	0.0320	0.812
21	0.0385	0.723
22	0.0253	0.644
23	0.0226	0.573
24	0.0201	0.511
25	0.0179	0.455
26	0.0159	0.405
27	0.0142	0.361
28	0.0126	0.321
29	0.0113	0.286
30	0.0100	0.255
31	0.0089	0.227
32	0.0080	0.202
33	0.0071	0.180
34	0.0063	0.160
35	0.0056	0.143
36	0.0050	0.127
37	0.0045	0.113
38	0.0040	0.001
39	0.0035	0.090
40	0.0031	0.080
41	0.0028	0.071
42	0.0025	0.063
43	0.0022	0.056
44	0.0020	0.051
45	0.0018	0.046
46	0.0016	0.041
47	0.0014	0.036
48	0.0012	0.030
49	0.0011	0.028
50	0.0010	0.025

OUNCE TO DECIMAL OF A POUND CONVERSION CHART

OUNCES	POUNDS
1	0.062
2	0.125
3	0.188
4	0.250

OUNCES	POUNDS
5	0.312
6	0.375
7	0.438
8	0.500
9	0.562
10	0.625
11	0.688
12	0.750
13	0.812
14	0.875
15	0.938
16	1.000

THREAD SIZE/SERIES

Nominal Size and Threads Per Inch	Thread Series
0-80 OR .060-80	UNF
1-64 OR .073-64	UNC
1-72 OR .073-72	UNF
2-56 OR .086-56	UNC
2-64 OR .086-64	UNF
3-48 OR .099-48	UNC
3-56 OR .099-56	UNF
4-40 OR .112-40	UNC
4-48 OR .112-48	UNF
5-40 OR .125-40	UNC
5-44 OR .125-44	UNF
6-32 OR .138-32	UNC
6-40 OR .138-40	UNF
8-32 OR .164-32	UNC
8-36 OR .164-36	UNF
10-24 OR .190-24	UNC
10-28 OR .190-28	UNS
10-32 OR .190-32	UNF
10-36 OR .190-36	UNS
10-40 OR .190-40	UNS
10-48 OR .190-48	UNS
10-56 OR .190-56	UNS
12-24 OR .216-24	UNC
12-28 OR .216-28	UNF
12-32 OR .216-32	UNEF
12-36 OR .216-36	UNS

12-40 OR .216-40	UNS
12-48 OR .216-48	UNS
12-56 OR .216-56	UNS
1/4-20 OR .250-20	UNC
1/4-24 OR .250-24	UNS
1/4-27 OR .250-27	UNS
1/4-28 OR .250-28	UNF
1/4-32 OR .250-32	UNEF
1/4-36 OR .250-36	UNS
1/4-40 OR .250-40	UNS
1/4-48 OR .250-48	UNS
1/4-56 OR .250-56	UNS
5/16-18 OR .3125-18	UNC
5/16-20 OR .3125-20	UN
5/16-24 OR .3125-24	UNF
5/16-27 OR .3125-27	UNS
5/16-28 OR .3125-28	UN
5/16-32 OR .3125-32	UNEF
5/16-36 OR .3125-36	UNS
5/16-40 OR .3125-40	UNS
5/16-48 OR .3125-48	UNS
3/8-16 OR .375-16	UNC
3/8-18 OR .375-18	UNS
3/8-20 OR .375-20	UN
3/8-24 OR .375-24	UNF
3/8-27 OR .375-27	UNS
3/8-28 OR .375-28	UN
3/8-32 OR .375-32	UNEF
3/8-36 OR .375-36	UNS
3/8-40 OR .375-40	UNS
.390-27	UNS
7/16-14 OR .4375-14	UNC
7/16-16 OR .4375-16	UN
7/16-18 OR .4375-18	UNS
7/16-20 OR .4375-20	UNF
7/16-24 OR .4375-24	UNS
7/16-27 OR .4375-27	UNS
7/16-28 OR .4375-28	UNEF
7/16-32 OR .4375-32	UN
7/16-36 OR .4375-36	UNS
7/16-40 OR .4375-40	UNS
1/2-12 OR .500-12	UNS
1/2-13 OR .500-13	UNC
1/2-14 OR .500-14	UNS
1/2-16 OR .500-16	UN
1/2-18 OR .500-18	UNS

1/2-20 OR .500-20	UNF
1/2-24 OR .500-24	UNS
1/2-27 OR .500-27	UNS
1/2-28 OR .500-28	UNEF
1/2-32 OR .500-32	UN
1/2-36 OR .500-36	UNS
1/2-40 OR .500-40	UNS
9/16-12 OR .5625-12	UNC
9/16-14 OR .5625-14	UNS
9/16-16 OR .5625-16	UN
9/16-18 OR .5625-18	UNF
9/16-20 OR .5625-20	UN
9/16-24 OR .5625-24	UNEF
9/16-27 OR .5625-27	UNS
9/16-28 OR .5625-28	UN
9/16-32 OR .5625-32	UN
9/16-36 OR .5625-36	UNS
9/16-40 OR .5625-40	UNS
5/8-11 OR .625-11	UNC
5/8-12 OR .625-12	UN
5/8-14 OR .625-14	UNS
5/8-16 OR .625-16	UN
5/8-18 OR .625-18	UNF
5/8-24 OR .625-24	UNEF
5/8-27 OR .625-27	UNS
5/8-28 OR .625-28	UN
5/8-32 OR .625-32	UN
5/8-36 OR .625-36	UNS
11/16-12 OR .6875-12	UN
11/16-16 OR .6875-16	UN
11/16-20 OR .6875-20	UN
11/16-24 OR .6875-24	UNEF
11/16-28 OR .6875-28	UN
11/16-32 OR .6875-32	UN
3/4-10 OR .750-10	UNC
3/4-12 OR .750-12	UN
3/4-14 OR .750-14	UNS
3/4-16 OR .750-16	UNF
3/4-18 0R .750-18	UNS
3/4-20 OR .750-20	UNEF
3/4-24 OR .750-24	UNS
3/4-27 OR .750-27	UNS
3/4-28 OR .750-28	UN
3/4-32 OR .750-32	UN
3/4-36 OR .750-36	UNS
3/4-40 OR .750-40	UNS

13/16-12 OR .8125-12	UN
13/16-16 OR .8125-16	UN
13/16-20 OR .8125-20	UNEF
13/16-28 OR .8125-28	UN
13/16-32 OR .8125-32	UN
7/8-9 OR .875-9	UNC
7/8-10 OR .875-10	UNS
7/8-12 OR .875-12	UN
7/8-14 OR .875-14	UNF
7/8-16 OR .875-16	UN
7/8-18 OR .875-18	UNS
7/8-20 OR .875-20	UNEF
7/8-24 OR .875-24	UNS
7/8-27 OR .875-27	UNS
7/8-28 OR .875-28	UN
7/8-32 OR .875-32	UN
7/8-36 OR .875-36	UNS
7/8-40 OR .875-40	UNS
15/16-12 OR .9375-12	UN
15/16-16 OR .9375-16	UN
15/16-20 OR .9375-20	UNEF
15/16-28 OR .9375-28	UN
15/16-32 OR .9375-32	UN
1-8 OR 1.000-8	UNC
1-10 OR 1.000-10	UNS
1-12 OR 1.000-12	UNF
1-14 OR 1.000-14	UNS
1-16 OR 1.000-16	UN
1-18 OR 1.000-18	UNS
1-20 OR 1.000-20	UNEF
1-24 OR 1.000-24	UNS
1-27 OR 1.000-27	UNS
1-28 OR 1.000-28	UN
1-32 OR 1.000-32	UN
1-36 OR 1.000-36	UNS
1-40 OR 1.000-40	UNS
1 1/16-8 OR 1.0625-8	UN
1 1/16-12 OR 1.0625-12	UN
1 1/16-16 OR 1.0625-16	UN
1 1/16-18 OR 1.0625-18	UNEF
1 1/16-20 OR 1.0625-20	UN
1 1/16-28 OR 1.0625-28	UN
1 1/8-7 OR 1.125-7	UNC
1 1/8-8 OR 1.125-8	UN
1 1/8-10 OR 1.125-10	UNS
1 1/8-12 OR 1.125-12	UNF

1 1/8-14 OR 1.125-14	UNS
1 1/8-16 OR 1.125-16	UN
1 1/8-18 OR 1.125-18	UNEF
1 1/8-20 OR 1.125-20	UN
1 1/8-24 OR 1.125-24	UNS
1 1/8-28 OR 1.125-28	UN
1 3/16-8 OR 1.188-8	UN
1 3/16-12 OR 1.188-12	UN
1 3/16-16 OR 1.188-16	UN
1 3/16-18 OR 1.188-18	UNEF
1 3/16-20 OR 1.188-20	UN
1 3/16-28 OR 1.188-28	UN
1 1/4-7 OR 1.250-7	UNC
1 1/4-8 OR 1.250-8	UN
1 1/4-10 OR 1.250-10	UNS
1 1/4-12 OR 1.250-12	UNF
1 1/4-14 OR 1.250-14	UNS
1 1/4-16 OR 1.250-16	UN
1 1/4-18 OR 1.250-18	UNEF
1 1/4-20 OR 1.250-20	UN
1 1/4-24 OR 1.250-24	UNS
1 1/4-28 OR 1.250-28	UN
1 5/16-8 OR 1.312-8	UN
1 5/16-12 OR 1.312-12	UN
1 5/16-16 OR 1.312-16	UN
1 5/16-18 OR 1.312-18	UNEF
1 5/16-20 OR 1.312-20	UN
1 5/16-28 OR 1.312-28	UN
1 3/8-6 OR 1.375-6	UNC
1 3/8-8 OR 1.375-8	UN
1 3/8-10 OR 1.375-10	UNS
1 3/8-12 OR 1.375-12	UNF
1 3/8-14 OR 1.375-14	UNS
1 3/8-16 OR 1.375-16	UN
1 3/8-18 OR 1.375-18	UNEF
1 3/8-20 OR 1.375-20	UN
1 3/8-24 OR 1.375-24	UNS
1 3/8-28 OR 1.375-28	UN
1 7/16-6 OR 1.4375-6	UN
1 7/16-8 OR 1.438-8	UN
1 7/16-12 OR 1.438-12	UN
1 7/16-16 OR 1.438-16	UN
1 7/16-18 OR 1.438-18	UNEF
1 7/16-20 OR 1.438-20	UN
1 7/16-28 OR 1.438-28	UN
1 1/2-6 OR 1.500-6	UNC

1 1/2-8 OR 1.500-8	UN
1 1/2-10 OR 1.500-10	UNS
1 1/2-12 OR 1.500-12	UNF
1 1/2-14 OR 1.500-14	UNS
1 1/2-16 OR 1.500-16	UN
1 1/2-18 OR 1.500-18	UNEF
1 1/2-20 OR 1.500-20	UN
1 1/2-24 OR 1.500-24	UNS
1 1/2-28 OR 1.500-28	UN
1 9/16-6 OR 1.562-6	UN
1 9/16-8 OR 1.562-8	UN
1 9/16-12 OR 1.562-12	UN
1 9/16-16 OR 1.562-16	UN
1 9/16-18 OR 1.562-18	UNEF
1 9/16-20 OR 1.562-20	UN
1 5/8-6 OR 1.625-6	UN
1 5/8-8 OR 1.625-8	UN
1 5/8-10 OR 1.625-10	UNS
1 5/8-12 OR 1.625-12	UN
1 5/8-14 OR 1.625-14	UNS
1 5/8-16 OR 1.625-16	UN
1 5/8-18 OR 1.625-18	UNEF
1 5/8-20 OR 1.625-20	UN
1 5/8-24 OR 1.625-24	UNS
1 11/16-6 OR 1.688-6	UN
1 11/16-8 OR 1.688-8	UN
1 11/16-12 OR 1.688-12	UN
1 11/16-16 OR 1.688-16	UN
1 11/16-18 OR 1.688-18	UNEF
1 11/16-20 OR 1.688-20	UN
1 3/4-5 OR 1.750-5	UNC
1 3/4-6 OR 1.750-6	UN
1 3/4-8 OR 1.750-8	UN
1 3/4-10 OR 1.750-10	UNS
1 3/4-12 OR 1.750-12	UN
1 3/4-14 OR 1.750-14	UNS
1 3/4-16 OR 1.750-16	UN
1 3/4-20 OR 1.750-20	UN
1 13/16-6 OR 1.812-6	UN
1 13/16-8 OR 1.812-8	UN
1 13/16-12 OR 1.812-12	UN
1 13/16-16 OR 1.812-16	UN
1 13/16-20 OR 1.812-20	UN
1 7/8-6 OR 1.875-6	UN
1 7/8-8 OR 1.875-8	UN
1 7/8-10 OR 1.875-10	UNS

1 7/8-12 OR 1.875-12	UN
1 7/8-14 OR 1.875-14	UNS
1 7/8-16 OR 1.875-16	UN
1 7/8-18 OR 1.875-18	UNS
1 7/8-20 OR 1.875-20	UN
1 15/16-6 OR 1.938-6	UN
1 15/16-8 OR 1.938-8	UN
1 15/16-12 OR 1.938-12	UN
1 15/16-16 OR 1.938-16	UN
1 15/16-20 OR 1.938-20	UN
2-4 1/2 OR 2.000-4.5	UNC
2-6 OR 2.000-6	UN
2-8 OR 2.000-8	UN
2-10 OR 2.000-10	UN
2-12 OR 2.000-12	UN
2-14 OR 2.000-14	UNS
2-16 OR 2.000-16	UN
2-18 OR 2.000-18	UNS
2-20 OR 2.000-20	UN
2 1/16-16 OR 2.062-16	UNS
2 1/8-6 OR 2.125-6	UN
2 1/8-8 OR 2.125-8	UN
2 1/8-12 OR 2.125-12	UN
2 1/8-16 OR 2.125-16	UN
2 1/8-20 OR 2.125-20	UN
2 3/16-16 OR 2.188-16	UNS
2 1/4-4 1/2 OR 2.250-4.5	UNC
2 1/4-6 OR 2.250-6	UN
2 1/4-8 OR 2.250-8	UN
2 1/4-10 OR 2.250-10	UNS
2 1/4-12 OR 2.250-12	UN
2 1/4-14 OR 2.250-14	UN
2 1/4-16 OR 2.250-16	UN
2 1/4-18 OR 2.250-18	UNS
2 1/4-20 OR 2.250-20	UN
2 5/16-16 OR 2.312-16	UNS
2 3/8-6 OR 2.375-6	UN
2 3/8-8 OR 2.375-8	UN
2 3/8-12 OR 2.375-12	UN
2 3/8-16 OR 2.375-16	UN
2 3/8-20 OR 2.375-20	UN
2 7/16-16 OR 2.438-16	UNS
2 1/2-4 OR 2.500-4	UNC
2 1/2-6 OR 2.500-6	UN
2 1/2-8 OR 2.500-8	UN
2 1/2-10 OR 2.500-10	UNS

2 1/2-12 OR 2.500-12	UN
2 1/2-14 OR 2.500-14	UNS
2 1/2-16 OR 2.500-16	UN
2 1/2-18 OR 2.500-18	UNS
2 1/2-20 OR 2.500-20	UN
2 5/8-6 OR 2.625-6	UN
2 5/8-8 OR 2.625-8	UN
2 5/8-12 OR 2.625-12	UN
2 5/8-16 OR 2.625-16	UN
2 5/8-20 OR 2.625-20	UN
2 3/4-4 OR 2.750-4	UNC
2 3/4-6 OR 2.750-6	UN
2 3/4-8 OR 2.750-8	UN
2 3/4-10 OR 2.750-10	UNS
2 3/4-12 OR 2.750-12	UN
2 3/4-14 OR 2.750-14	UNS
2 3/4-16 OR 2.750-16	UN
2 3/4-18 OR 2.750-18	UNS
2 3/4-20 OR 2.750-20	UN
2 7/8-6 OR 2.875-6	UN
2 7/8-8 OR 2.875-8	UN
2 7/8-12 OR 2.875-12	UN
2 7/8-16 OR 2.875-16	UN
2 7/8-20 OR 2.875-20	UN
3-4 OR 3.000-4	UNC
3-6 OR 3.000-6	UN
3-8 OR 3.000-8	UN
3-10 OR 3.000-10	UNS
3-12 OR 3.000-12	UN
3-14 OR 3.000-14	UNS
3-16 OR 3.000-16	UN
3-18 OR 3.000-18	UNS
3-20 OR 3.000-20	UN
3 1/8-6 OR 3.125-6	UN
3 1/8-8 OR 3.125-8	UN
3 1/8-12 OR 3.125-12	UN
3 1/8-16 OR 3.125-16	UN
3 1/4-4 OR 3.250-4	UNC
3 1/4-6 OR 3.250-6	UN
3 1/4-8 OR 3.250-8	UN
3 1/4-10 OR 3.250-10	UNS
3 1/4-12 OR 3.250-12	UN
3 1/4-14 OR 3.250-14	UNS
3 1/4-16 OR 3.250-16	UN
3 1/4-18 OR 3.250-18	UNS
3 3/8-6 OR 3.375-6	UN

3 3/8-8 OR 3.375-8	UN
3 3/8-12 OR 3.375-12	UN
3 3/8-16 OR 3.375-16	UN
3 1/2-4 OR 3.500-4	UNC
3 1/2-6 OR 3.500-6	UN
3 1/2-8 OR 3.500-8	UN
3 1/2-10 OR 3.500-10	UNS
3 1/2-12 OR 3.500-12	UN
3 1/2-14 OR 3.500-14	UNS
3 1/2-16 OR 3.500-16	UN
3 1/2-18 OR 3.500-18	UNS
3 5/8-6 OR 3.625-6	UN
3 5/8-8 OR 3.625-8	UN
3 5/8-12 OR 3.625-12	UN
3 5/8-16 OR 3.625-16	UN
3 3/4-4 OR 3.750-4	UNC
3 3/4-6 OR 3.750-6	UN
3 3/4-8 OR 3.750-8	UN
3 3/4-10 OR 3.750-10	UNS
3 3/4-12 OR 3.750-12	UN
3 3/4-14 OR 3.750-14	UNS
3 3/4-16 OR 3.750-16	UN
3 3/4-18 OR 3.750-18	UNS
3 7/8-6 OR 3.875-6	UN
3 7/8-8 OR 3.875-8	UN
3 7/8-12 OR 3.875-12	UN
3 7/8-16 OR 3.875-16	UN
4-4 OR 4.000-4	UNC
4-6 OR 4.000-6	UN
4-8 OR 4.000-8	UN
4-10 OR 4.000-10	UNS
4-12 OR 4.000-12	UN
4-14 OR 4.000-14	UNS
4-16 OR 4.000-16	UN
4 1/8-4 OR 4.125-4	UN
4 1/8-12 OR 4.125-12	UN
4 1/8-16 OR 4.125-16	UN
4 1/4-4 OR 4.250-4	UN
4 1/4-6 OR 4.250-6	UN
4 1/4-10 OR 4.250-10	UNS
4 1/4-12 OR 4.250-12	UN
4 1/4-14 OR 4.250-14	UNS
4 1/4-16 OR 4.250-16	UN
4 3/8-6 OR 4.375-6	UN
4 3/8-12 OR 4.375-12	UN
4 3/8-16 OR 4.375-16	UN

4 1/2-4 OR 4.500-4	UN
4 1/2-6 OR 4.500-6	UN
4 1/2-10 OR 4.500-10	UNS
4 1/2-12 OR 4.500-12	UN
4 1/2-14 OR 4.500-14	UNS
4 1/2-16 OR 4.500-16	UN
4 5/8-6 OR 4.625-6	UN
4 5/8-12 OR 4.625-12	UN
4 5/8-16 OR 4.625-16	UN
4 3/4-4 OR 4.750-4	UN
4 3/4-6 OR 4.750-6	UN
4 3/4-10 OR 4.750-10	UNS
4 3/4-12 OR 4.750-12	UN
4 3/4-14 OR 4.750-14	UNS
4 3/4-16 OR 4.750-16	UN
4 7/8-6 OR 4.875-6	UN
4 7/8-12 OR 4.875-12	UN
4 7/8-16 OR 4.875-16	UN
5-4 OR 5.000-4	UN
5-8 OR 5.000-8	UN
5-10 OR 5.000-10	UNS
5-12 OR 5.000-12	UN
5-14 OR 5.000-14	UNS
5-16 OR 5.000-16	UN
5 1/8-12 OR 5.125-12	UN
5 1/8-16 OR 5.125-16	UN
5 1/4-4 OR 5.250-4	UN
5 1/4-10 OR 5.250-10	UNS
5 1/4-12 OR 5.250-12	UN
5 1/4-14 OR 5.250-14	UNS
5 1/4-16 OR 5.250-16	UN
5 3/8-12 OR 5.375-12	UN
5 3/8-16 OR 5.375-16	UN
5 1/2-4 OR 5.500-4	UN
5 1/2-10 OR 5.500-10	UNS
5 1/2-12 OR 5.500-12	UN
5 1/2-14 OR 5.500-14	UNS
5 1/2-16 OR 5.500-16	UN
5 5/8-12 OR 5.625-12	UN
5 3/4-4 OR 5.750-4	UN
5 5/8-16 OR 5.625-16	UN
5 3/4-4 OR 5.750-4	UN
5 3/4-10 OR 5.750-10	UNS
5 3/4-12 OR 5.750-12	UN
5 3/4-14 OR 5.750-14	UNS
5 3/4-16 OR 5.750-16	UN

5 7/8-12 OR 5.875-12	UN
5 7/8-16 OR 5.875-16	UN
6-4 OR 6.000-4	UN
6-10 OR 6.000-10	UNS
6-12 OR 6.000-12	UN
6-14 OR 6.000-14	UNS
6-16 OR 6.000-16	UN

SCREW THREAD SERIES DEFINITIONS

ABBREVIATION	DEFINITIONS
ISO M	(SI (METRIC) OTHER THAN COARSE)
ISO S	(SI (METRIC) COARSE)
UN	UNIFIED CONSTANT PITCH THREAD SERIES
UNC	UNIFIED COARSE THREAD SERIES
UNF	UNIFIED FINE THREAD SERIES
UNEF	UNIFIED EXTRA-FINE THREAD SERIES
UNS	UNIFIED NATIONAL SPECIAL

ISO METRIC SCREW THREAD SIZE/THREAD PITCH *

SIZE IN MM	PITCH IN MM		
(BASIC MAJOR DIAMETER)	ISO-M		ISO-S
COARSE	FINE	COARSE	
0.25	----	----	0.075
0.3	----	----	0.08
0.35	----	----	0.09
0.4	----	----	0.1
0.45	----	----	0.1
0.5	----	----	0.125
0.55	----	----	0.125
0.6	----	----	0.15
0.7	----	----	0.175
0.8	----	----	0.2
0.9	----	----	0.225
1.0	----	----	0.25
1.1	----	----	0.25
1.2	----	----	0.25
1.4	----	----	0.30

1.6	----	----	0.35
1.8	----	----	0.35
2.0	----	----	0.40
2.2	----	----	0.45
2.5	----	----	0.45
3.0	----	----	0.50
3.5	----	----	0.60
4.0	----	----	0.70
4.5	----	----	0.75
5.0	----	----	0.80
6.0	1.00	----	----
7.0	1.00	----	----
8.0	1.25	1.00	----
10.0	1.50	1.25	----
12.0	1.75	1.25	----
14.0	2.00	1.50	----
16.0	2.00	1.50	----
18.0	2.50	1.50	----
20.0	2.50	1.50	----
22.0	2.50	1.50	----
24.0	3.00	2.00	----
27.0	3.00	2.00	----
30.0	3.50	2.00	----
33.0	3.50	2.00	----
36.0	4.00	3.00	----
39.0	4.00	3.00	----

ISO METRIC THREADS ARE DESIGNATED BY A LETTER (M OR S), FOLLOWED BY THE SIZE AND PITCH IN MILLIMETERS, AS SHOWN BELOW. WHERE THERE IS NO INDICATION OF PITCH, THE COARSE PITCH IS IMPLIED.

EXAMPLES: M6X1 (INDICATES 6-MM DIAMETER, 1-MM PITCH); S2 (INDICATES 2-MM DIAMETER, COARSE (0.4) PITCH)

M6X1 (INDICATES 6-MM DIAMETER, 1-MM PITCH);

S2 (INDICATES 2-MM DIAMETER, COARSE (0.4) PITCH)

* Adapted from SCREW THREAD STANDARDS FOR FEDERAL SERVICES (1957), Handbook H28, Part III, Table 14.2.

WOODSCREWS

SIZE	SCREW DIAMETER IN INCHES	(MILLIMETERS)	THREADS PER INCH	THREAD PITCH(P) IN MILLI- METERS	THREAD DEPTH IN MILLI-METERS
BASIC	MAX	MIN			
2	0.086	0.090 (2.74)	0.079 (1.98)	26	0.95	0.25
3	0.099	0.103 (2.57)	0.092 (2.29)	24	1.12	0.27
4	.112	0.116 (2.90)	0.105 (2.64)	32	1.15	0.33
5	0.125	0.129 (3.31)	0.119 (2.97)	20	1.27	0.37
6	0.138	0.142 (3.58)	0.131 (3.33)	18	1.41	0.43
7	0.151	0.155 (4.02)	0.141 (3.68)	16	1.59	0.48
8	0.164	0.168 (4.29)	0.157 (4.04)	15	1.81	0.51
9	0.177	0.181 (4.65)	0.170 (4.39)	14	2.12	0.61
10	0.190	0.194 (5.00)	0.183 (4.72)	13	2.12	0.66
12	0.216	0.220 (5.72)	0.209 (5.38)	11	2.54	0.66
14	0.242	0.246 (6.47)	0.235 (6.05)	10	2.82	0.78
16	0.268	0.272 (7.14)	0.261 (6.76)	9	3.17	0.97
18	0.294	0.298 (7.85)	0.287 (7.47)	8	3.38	1.04

UNITS OF MASS CONVERSION CHART

TO CONVERT	TO	MULTIPLY BY
GRAMS	OUNCES, AVOIR	0.03527396
GRAMS	OUNCES, TROY	0.03215075
GRAMS	POUNDS	0.00220462
KILOGRAMS	POUNDS	2.204623
OUNCES, AVOIR	GRAMS	28.349523125
OUNCES, AVOIR	POUNDS	0.0625
OUNCES, TROY	GRAMS	31.1034768
POUNDS	GRAMS	453.59237
POUNDS	KILOGRAMS	0.45359237
POUNDS	OUNCES, AVOIR	16.0

Source: Units of Weights and Measures, National Bureau of Standards (Misc. Publication 286).

UNIT OF MEASURE CONVERSION TABLE (METRIC)

TO CHANGE	TO	MULTIPLY BY
CUBIC INCHES	CUBIC CENTIMETERS	16.3872
CUBIC CENTIMETERS	CUBIC INCHES	0.061

FIIG Change List

FIIG Change List, Effective May 7, 2010

This change replaced with ISAC or and/or coding.